Final
Work Plan /
Sampling and Analysis Plan
for
Vapor Intrusion Investigation
at Operable Unit – 1

Former Schilling Air Force Base
CERCLA Process Support
Salina, Kansas

August 22, 2006

Prepared for

U.S. Army Corps of Engineers
Kansas City District

Prepared by

Contract Number: W912DQ-06-D-0006
Project Number: 42244

TABLE OF CONTENTS

Page No.

LIST OF TABLES TC-3

LIST OF FIGURES TC-3

LIST OF ACRONYMS AND ABBREVIATIONS TC-4

1.0 INTRODUCTION 1-1
1.1 Site History and Description 1-1
1.2 Investigation History 1-2
1.3 Purpose and Scope of Work 1-3

2.0 PROJECT ORGANIZATION AND REPORTING 2-1
2.1 Project Organization 2-1
2.1.1 U. S. Army Corps of Engineers 2-1
2.1.2 Malcolm Pirnie, Inc. 2-1
2.1.3 Burns & McDonnell Engineering Company, Inc. 2-1
2.1.4 Contract Laboratory 2-1
2.1.5 Quality Assurance Laboratory 2-2
2.2 Project Reporting 2-2
2.2.1 Daily Quality Control Reports 2-2
2.2.2 Monthly Progress Reports 2-3
2.2.3 Interim Data Report 2-3
2.2.4 Vapor Intrusion Report 2-4

3.0 FIELD ACTIVITIES AND DATA EVALUATION PROCEDURES 3-1
3.1 Rationale for Phased Evaluation of Vapor Intrusion 3-1
3.2 Sub-Slab Soil Vapor Sampling (Phase 1 Investigation) 3-2
3.2.1 Sampling Overview and Rationale 3-2
3.2.2 Initial Building Survey 3-3
3.2.3 Sub-Slab Soil Vapor Probe Construction and Installation 3-3
3.2.4 Sub-Slab Sampling Procedures 3-5
3.2.4.1 Sample Train Assembly 3-5
3.2.4.2 Purging Soil Vapor Probes 3-6
3.2.4.3 Mechanical Leak Testing 3-6
3.2.4.4 Sample Collection 3-6
3.2.4.5 Quality Control 3-8
3.2.5 Equipment Decontamination Procedures 3-8
3.2.6 Investigation-Derived Waste (IDW) 3-8
3.3 Indoor Air Sampling (Phase 2 Investigation) 3-8
3.3.1 Indoor Air Sampling Overview and Rationale 3-8
3.3.2 Indoor Air Quality Building Survey 3-9
3.3.3 Indoor Air Sampling Procedures 3-9
3.3.4 Ambient Air Sampling 3-11
3.3.5 Quality Control 3-12

TABLE OF CONTENTS (continued) Page No.

3.4 Sample Analysis and Validation 3-12
3.5 Chain of Custody/Documentation 3-13
3.5.1 Sample Chain of Custody 3-13
3.5.2 Chain of Custody Form 3-13
3.5.3 Sample Identification Nomenclature 3-13
3.5.4 Field Logbook 3-14
3.5.5 Field Forms 3-15
3.6 Sample Handling and Shipment 3-16
3.7 Sample Location Mapping 3-16

APPENDICES

APPENDIX A – Field Forms
Daily Quality Control Report
Building Questionnaire
Field Data Air Sampling Form
Indoor Air Quality Building Survey
Chain of Custody Record & Analytical Service Request
APPENDIX B – Risk-Based Screening Levels
APPENDIX C – Standard Operating Procedures
KDHE Standard Operating Procedure BER-33: Procedures for Sampling and Analysis of Indoor Air Samples
USEPA Standard Operating Procedure for Installation of Sub-Slab Soil Vapor Probes and Sampling Using EPA Method TO-15 to Support Vapor Intrusion Investigations
Columbia Analytical Services: Summa Canister Instructions

LIST OF TABLES

Table No.	Title
2-1	Screening Levels for TO-15 Analytes, Operable Unit-1
3-1	Sub-Slab Soil Vapor Sampling Requirements, Operable Unit-1
3-2	Indoor Air Sampling Requirements, Operable Unit-1
3-3	Reference Limits for Analytical Method TO-15, Operable Unit-1

LIST OF FIGURES

Figure No.	Title
1-1	Site Map
1-2	Proposed Sub-Slab Vapor Probe Locations
2-1	Organization Chart
3-1	6 Liter & 1 Liter Summa Canister Assemblies

LIST OF ACRONYMS AND ABBREVIATIONS

AA	Ambient Air
AFB	Air Force Base
AIHA	American Industrial Hygienist Association
AOI	Area of Interest
BMcD	Burns & McDonnell Engineering Company, Inc.
CENWK	Kansas City District (USACE)
CERCLA	Comprehensive Environmental Response, Compensation, and Liability Act
cis-1, 2-DCE	cis-1, 2-Dichloroethene
cm	centimeter
COC	Chain of Custody
Columbia	Columbia Analytical Services, Inc.
DOD	Department of Defense
DQCR	Daily Quality Control Reports
ESI	Expanded Site Investigation
FedEx	Federal Express
FSM	Field Site Manager
Hg	Mercury
IA	Indoor Air
ICBM	Intercontinental ballistic missile
ID	Identification
IDW	Investigation-Derived Waste
KDHE	Kansas Department of Health and Environment
KDHE SOP	*Standard Operating Procedure (SOP) BER-33, Procedures for Sampling and Analysis of Indoor Air Samples*
L	Liter
MP	Malcolm Pirnie, Inc.
µg/L	Micrograms per Liter
mL/min	Milliliters per Minute
MSDS	Material Safety Data Sheet
NPT	National Pipe Tapered
NELAP	National Environmental Laboratory Accreditation Program
OU-1	Operable Unit-1

LIST OF ACRONYMS AND ABBREVIATIONS (continued)

P	Vapor Probe
Phase 1	Phase 1 of the Vapor Intrusion Investigation
Phase 2	Phase 2 of the Vapor Intrusion Investigation
PID	Photoionization Detector
POC	Point of Contact
QA	Quality Assurance
QAPP	Quality Assurance Project Plan
QC	Quality Control
QCSR	Quality Control Summary Report
RAB	Restoration Advisory Board
RI	Remedial Investigation
SAA	Salina Airport Authority
SI	Site Investigation
SIM	Selective Ion Monitoring
SOP	Standard Operating Procedure
SSHS	Site Safety and Health Supervisor
STL-Burlington	Severn Trent Laboratories of Burlington, Vermont
TCE	Trichloroethene
USACE	United States Army Corps of Engineers
USEPA	United States Environmental Protection Agency
USEPA SOP	*Draft Standard Operating Procedure for Installation of Sub-Slab Vapor Probes and Sampling Using EPA Method TO-15 to Support Vapor Intrusion Investigations*
Vo-Tech	Vocational-Technical
VOC	Volatile Organic Compound
WP/SAP	Work Plan/Sampling and Analysis Plan

* * * * *

2.0 PROJECT ORGANIZATION AND REPORTING

2.1 PROJECT ORGANIZATION

This section describes key project organizations and personnel. Figure 2-1 provides an organization chart showing key personnel and lines of authority.

2.1.1 U. S. Army Corps of Engineers

Ms. Robyn Kiefer is the CENWK Project Manager for this project and will serve as the primary point of contact for all project-related questions. Ms. Kiefer can be contacted at (816) 389-3615.

2.1.2 Malcolm Pirnie, Inc.

MP has overall responsibility for the project to the USACE-CENWK, and will act as the program administrator and provide independent quality control (QC) of all submittals. Mr. John Logigian is the MP Project Manager. Mr. Logigian can be reached at (914) 641-2690. However, the BMcD field team will coordinate all field activities with the BMcD project manager.

2.1.3 Burns & McDonnell Engineering Company, Inc.

Mr. Tracy Cooley will serve as the BMcD Project Manager. Mr. Cooley will be responsible for complete coordination of the work, including adequate internal controls and review procedures to eliminate conflicts and errors, and to verify technical accuracy. In addition, Mr. Cooley is responsible for overseeing activities involving sampling and performance of audits. Mr. Cooley can be contacted at (816) 822-3369.

A BMcD Field Site Manager (FSM) and the Site Safety and Health Supervisor (SSHS) who is experienced in vapor intrusion sampling will be designated for each sampling event. The FSM/SSHS will supervise the field activities relevant to this project and will have direct responsibility for site-specific activities and decisions regarding the immediate safety of investigation personnel. The FSM/SSHS will report to the BMcD Project Manager and the BMcD Safety and Health Officer.

Mr. Eric Wenger, Industrial Hygienist, will serve as the BMcD Safety and Health Officer for this project and will have ultimate responsibility for the health and safety of field personnel. Mr. Wenger can be contacted at (816) 822-3894.

2.1.4 Contract Laboratory

Columbia Analytical Services, Inc. (Columbia) is the primary contract laboratory for the analysis of sub-slab soil vapor and indoor air samples from the Site. Columbia is certified through the National

Environmental Laboratory Accreditation Program (NELAP) and the American Industrial Hygiene Association (AIHA). Columbia will be contracted by BMcD. The address for Columbia is listed below.

Columbia Analytical Services, Inc.
2665 Park Center Drive, Ste. D
Simi Valley, California 93065
Phone: (805) 526-7161
Point of Contact (POC): Michael Tuday

2.1.5 Quality Assurance Laboratory

Severn Trent Laboratories of Burlington, Vermont (STL-Burlington), certified through NELAP, is the designated QA laboratory for sub-slab soil vapor and indoor air samples collected from the Site. The STL-Burlington address and POC is listed below:

STL-Burlington
208 South Park Drive, Suite 1
Colchester, Vermont 05446
Phone: (802) 655-1203
POC: Don Dawicki

2.2 PROJECT REPORTING

Required reports for this project will include DQCRs, monthly progress reports, a draft and final Interim Data Report; and a pre-draft, draft, and final Vapor Intrusion Report.

2.2.1 Daily Quality Control Reports

The FSM will be responsible for ensuring that the former Schilling AFB Site sampling team record daily activities on the standard DQCR form. A DQCR will be submitted on each day of field activities; Chain of Custody (COC) and Field Data Air Sampling Forms will be submitted on each day of sampling. The DQCR will be completed daily and submitted in draft form to the BMcD project manager no later than 0800 on the day following the fieldwork. The BMcD project manager will review the document, and then forward it on to MP and the CENWK technical manager for review. The reports will be reviewed by MP and CENWK. Comments will be provided as appropriate to the BMcD Project Manager within 24 hours of submittal or the next business day. BMcD will correct the reports in accordance with the comments. A copy of the DQCR form is included in Appendix A of this WP/SAP.

2.2.2 Monthly Progress Reports

BMcD will submit a progress report each month to the CENWK technical manager. These progress reports will be submitted by the 15th of each month and will include the following information:

- Progress made during the reporting period
- Problem areas and recommended solutions (or outstanding issues)
- Any corrective actions undertaken and their effects
- Key personnel changes
- All significant phone conversations that involve major project decisions, including those in which CENWK participates
- Anticipated activities for the next reporting period
- Updated schedule

2.2.3 Interim Data Report

Within 20 working days of receiving the analytical data from the first phase of investigation, BMcD will submit the draft Interim Data Report. The Interim Data Report will provide the analytical data, canister batch certification documentation, and validation documentation from the sub-slab soil vapor samples and will include field notes, logs, photographs, and forms completed during the course of the first phase of the vapor intrusion investigation. The Interim Data Report will include the necessary tables and figures to summarize the sub-slab soil vapor results. Within ten working days of receiving comments from CENWK on the draft document, BMcD will submit the final Interim Data Report.

The information provided in the Interim Data Report will serve as the basis for identifying buildings where indoor air samples will be collected. As part of the Interim Data Report, analytical results from the sub-slab soil vapor samples will be compared to the sub-slab soil vapor screening levels provided on Table 2-1. A comparison of analytical reporting limits to the screening levels is provided on Worksheet #15 of the attached QAPP. Indoor air samples will be collected from buildings where one or more sub-slab soil vapor samples showed chemical concentrations exceeding the sub-slab screening levels.

The sub-slab screening levels were calculated by CENWK, and are described in Appendix B. The sub-slab screening levels were developed by combining risk-based concentrations for indoor air with an attenuation factor to account for migration across a building slab. The indoor air screening levels were calculated based on a target cancer risk level of 1 in 100,000 (1E-05) or a noncancer hazard index of 0.1, whichever value is more protective (i.e., lower). The calculated risk-based concentrations for indoor air were adjusted by a factor of 0.1 to account for attenuation through the concrete slab. The attenuation

factor of 0.1 represents the conservative default value provided in the USEPA's 2002 *Draft Guidance for Evaluating the Vapor Intrusion to Indoor Air Pathway from Groundwater and Soils (Subsurface Vapor Intrusion Guidance)*. This default value is being used to provide a conservative means of guiding the phased sampling effort. A more detailed discussion of the development of the sub-slab screening levels is provided in Appendix B.

2.2.4 Vapor Intrusion Report

Within 20 working days of receiving the analytical data from the second phase of investigation, BMcD will submit the pre-draft Vapor Intrusion Report to the USACE. The Vapor Intrusion Report is intended to provide a summary of the results of the entire vapor intrusion investigation; therefore, the report will include the tables and figures needed to summarize the analytical results from both the sub-slab soil vapor and indoor air samples. The Vapor Intrusion Report will also provide the analytical data, individual canister certification documentation, and validation documentation from the indoor air samples and will include field notes, logs, photographs, and forms completed during the course of the second phase of the vapor intrusion investigation. Within ten working days of receiving comments from USACE, the draft Vapor Intrusion Report will be submitted to the regulatory agencies (USEPA Region VII and KDHE) and the Restoration Advisory Board (RAB). Within ten working days of receiving comments from the regulatory agencies and the RAB, BMcD will submit the final Vapor Intrusion Report.

* * * * * *

3.0 FIELD ACTIVITIES AND DATA EVALUATION PROCEDURES

This section provides the rationale for the phased approach to evaluating vapor intrusion, as well as the rationale and field procedures for each phase of the vapor intrusion investigation. As discussed in Section 1.3, the Phase 1 field activities consist of sub-slab soil vapor sampling while the Phase 2 field activities consist of indoor air sampling. Since the rationale and field procedures are different for each phase of the investigation, the information in this section is organized by investigation phase/sample type.

3.1 RATIONALE FOR PHASED EVALUATION OF VAPOR INTRUSION

Vapor intrusion is defined as vapor phase migration of volatile chemicals (both organic and inorganic) from subsurface sources (i.e., soil and/or groundwater) into occupied or potentially occupied surface structures. A chlorinated-solvent plume in groundwater has been identified in OU-1, and the presence of occupied structures directly above VOC-impacted groundwater creates the potential for vapor intrusion.

Current guidance on evaluating the vapor intrusion pathway recommends a phased approach. The first phase consists of evaluating groundwater and/or soil data to identify the presence of VOCs near buildings and provide a gross indication of the potential for vapor intrusion. If groundwater and/or soil data indicate the potential for vapor intrusion, then soil vapor data in the form of soil gas or sub-slab soil gas should be collected, and if soil vapor data indicate a potential for vapor intrusion, then indoor air data should be collected.

Chemical concentrations in groundwater are often used in models to estimate potential indoor vapor concentrations. In instances where modeling indicates the potential for vapor intrusion, collection of soil vapor data is often recommended as a means of providing a more site-specific evaluation. Since it is already a gaseous medium, soil vapor data are likely more indicative than groundwater data of the levels of VOCs available for migration into buildings. However, chemical concentrations in soil vapor can vary greatly with different soil types and moisture contents; therefore, it is important to collect soil vapor data from locations that are representative of the conditions directly beneath the building. The most reliable means of collecting representative soil vapor data is to collect it from directly beneath the building slab. Sub-slab soil vapor data, which are collected from the airspace beneath the building slab and above the porous backfill material directly beneath a building, are considered to be the subsurface data type most directly correlative to chemical concentrations in indoor air.

Indoor air data can be difficult to interpret due to the likely presence of background levels of VOCs from indoor and possibly outdoor sources. The presence of VOCs in indoor air as a result of indoor activities

and/or consumer products can be a confounding factor in a vapor intrusion evaluation, but if data are collected in the recommended phased approach, the groundwater and soil vapor data can be used to provide evidence to support an appropriate interpretation of the indoor air data.

3.2 SUB-SLAB SOIL VAPOR SAMPLING (PHASE 1 INVESTIGATION)

3.2.1 Sampling Overview and Rationale

The first phase of the vapor intrusion investigation consists of installing permanent sub-slab soil vapor sampling probes and collecting sub-slab soil vapor samples from a total of 11 buildings located in OU-1. The 11 buildings being sampled include most of the occupied structures that are located wholly or partially within the 100 μg/L contour line for total chlorinated solvents in groundwater. Two buildings that are located within the 100 μg/L contour line, the Tullis Building (Former Department of Defense [DOD] 849) and the Aeronautical Center (Former DOD 730), are not being addressed in this investigation. KDHE recently installed a sub-slab vapor mitigation system at the Tullis Building, and a sub-slab venting system had previously been installed at the Aeronautical Center. Penetrating the floor slab, as would be required to collect sub-slab soil vapor samples, could adversely impact the effectiveness of the existing mitigation systems; therefore, these two buildings were excluded from the vapor intrusion investigation. Sub-slab soil vapor samples will be collected from the following buildings (shown on Table 3-1 and Figure 1-2):

- Former DOD 624,
- Former DOD 628,
- Auto Mechanic Building (Former DOD 638),
- Vocational-Technical (Vo-Tech) Building (Former DOD 658),
- Raytheon Hangar (Former DOD 724),
- Former DOD 837,
- Composites Laboratory,
- Harbin Hall,
- Residence Hall,
- Technology Center, and
- College Center.

Due to the small size of the buildings, one sub-slab soil vapor sample will be collected from Former DOD 628 and the Composites Laboratory. Two sub-slab soil vapor samples will be collected from each of the remaining buildings. In buildings where one sample will be collected, the sample will be from a central

location within the building footprint. In buildings where two samples will be collected, the samples will generally be placed at opposite ends of the building, with one sample placed at the end of the building closest to the area of highest contaminant concentrations in groundwater. The Technology Center, Former DOD 624, and the Auto Mechanic Building (Former DOD 638) are located such that part of the building is within the 100 μg/L contour line and part of the building is within the 1,000 μg/L contour line. In these four buildings, one sample will be collected from the portion of the building within the 100 μg/L line, and one sample will be collected from within the 1,000 μg/L line. Figure 1-2 shows the proposed locations for each sub-slab soil vapor sample.

Before starting field activities, attempts will be made to obtain as-built drawings for each building to determine foundation thickness and utility locations. The as-built drawings will be used to determine final probe placement in each of the buildings. Final probe placement should be as close to the proposed locations as possible with consideration given to utility locations, interior building structure (i.e., presence of walls), and the presence of furniture and equipment.

3.2.2 Initial Building Survey

Prior to installing the sub-slab vapor probes, a building survey will be completed for each of the 11 buildings included in the vapor intrusion investigation. The purpose of the building survey is to document general building structural and use information, including describing the general building uses, presence/absence of wells or sumps, presence/absence of a basement, and documenting potential indoor VOC sources by identifying what chemicals are used or are present in the building. If available, Material Safety Data Sheets (MSDSs) for products used in the building will be obtained. If as-built drawings can not be obtained, the initial building survey will also include identifying the points at which subsurface utilities enter the building. The Building Questionnaire form should be used for the initial building survey. The Building Questionnaire form, which is included in Appendix A, was derived from the KDHE Residential Questionnaire provided in their *Standard Operating Procedure (SOP) BER-33, Procedures for Sampling and Analysis of Indoor Air Samples* (KDHE SOP). The KDHE SOP is provided in Appendix C. KDHE's Residential Questionnaire was modified slightly so it could be used for both commercial and residential buildings. This modification consisted of adding a question identifying whether the building is residential or commercial, a second question requiring a description of building uses, and adding a page to provide a chemical inventory.

3.2.3 Sub-Slab Soil Vapor Probe Construction and Installation

The sub-slab soil vapor probe installation procedures were obtained from the USEPA's *Draft Standard Operating Procedure for Installation of Sub-Slab Vapor Probes and Sampling Using EPA Method TO-15*

to Support Vapor Intrusion Investigations (USEPA SOP), which is provided in Appendix C. The sub-slab probes described in the USEPA SOP and in the following procedures are permanent sampling probes that will remain in place after completion of the sampling event. Permanent sampling probes are being installed because they provide higher quality and more consistent data. The individual probes will be removed and the holes sealed upon determining that further sub-slab soil vapor sampling will not be required at a given location.

Prior to constructing the sub-slab vapor probes, a pilot hole will be drilled to assess the thickness of the building slab using clean dedicated drill bits. One pilot hole should be drilled for each sub-slab vapor probe location. The pilot hole will later be converted to the sub-slab soil vapor probe; therefore, the pilot hole will be placed in the final probe installation location. Areas of visible staining or known previous chemical spills will be avoided. The thickness of the slab will be assessed in this manner at each of the buildings included in the investigation prior to proceeding with probe installation. The length of the probes will be determined based on the thickness of the building slab.

After determining the thickness of the slab, use a rotary hammer drill and a clean drill bit to create a shallow (2.5 centimeters (cm) or 1 inch) outer hole (2.2 cm or 7/8 inch in diameter) that partially penetrates the slab. This outer hole will be centered over the pilot hole. Use a small brush and dust pan to collect concrete dust and cuttings from the hole. Since the outer hole does not penetrate the floor slab, a dedicated drill bit is not required.

After completing the outer hole, a rotary hammer drill will be used to create a smaller diameter inner hole (0.8 cm or 5/16 inch) through the remainder of the slab and approximately 7 to 8 cm or 3 inches into sub-slab material. The pilot hole should be used as a guide for drilling the inner hole. The inner hole should be drilled using a dedicated drill bit. Drilling into sub-slab material will create an open cavity which will prevent obstruction of probe inlets during vapor sampling. Figure 2 of the USEPA SOP provided in Appendix C illustrates the appearance of “inner” and “outer” holes. After completing drilling, the outer hole should be cleaned using a towel moistened with deionized water to increase the potential of obtaining a good seal during cement application.

The basic design of a sub-slab vapor probe is illustrated in Figure 3 of the USEPA SOP in Appendix C. Probes should be constructed of stainless steel or Teflon™ tubing and fittings to ensure that construction materials are not a source of VOCs. Once the thickness of the slab is known, stainless steel or Teflon™ tubing should be cut to ensure that probes “float” in the slab to avoid obstruction of the probe with sub-slab material. Construct sub-slab vapor probes from small diameter (0.64 cm or 1/4 inch outer diameter x

0.46 cm or 0.18 inch inner diameter) chromatography grade 316 stainless steel tubing and stainless-steel compression to thread fittings (e.g., 0.64 cm or 1/4 inch outer diameter x 0.32 cm or 1/8 inch NPT (National Pipe Tapered) Swagelok™ female thread connectors) as illustrated in Figure 4 of the USEPA SOP provided in Appendix C. The probes will be closed using 0.32 cm (1/8 inch) recessed stainless steel or brass socket plugs.

Set sub-slab vapor probes in holes such that the fittings rest at the base of the outer hole and the top of the probes are completed flush with the slab. Each probe will have recessed stainless steel or brass plugs so as not to interfere with day-to-day use of buildings. Mix a quick-drying portland cement which expands upon drying (to ensure a tight seal) with deionized water to form a slurry and inject or push into the annular space between the probe and outside of the outer hole. Allow cement to cure for at least 24 hours prior to sampling.

3.2.4 Sub-Slab Sampling Procedures

Subsurface vapor will not be sampled if measurable precipitation or irrigation near the sampling location has occurred within the previous five days. The increased soil moisture can cause the soil vapor sample results to be biased low.

3.2.4.1 Sample Train Assembly

Samples will be collected using evacuated batch-certified 1 liter (L) Summa™ canisters equipped with dedicated flow regulators and integrated particulate filters. A flow regulator/particulate filter and vacuum gauge will be attached to each canister as shown on Figure 3-1 and described in the *Summa Canister Instructions* provided by the laboratory and included in Appendix C. Canisters, flow regulators/particulate filters, and vacuum gauges will be supplied by the laboratory.

A dedicated stainless-steel fitting and Teflon™ tubing will be connected to the soil vapor probe. Use dedicated fittings and tubing to avoid cross-contamination between probes. The Teflon™ tubing will be connected to a second piece of Teflon™ tubing using a ball valve and Swagelock™ fittings. The second piece of Teflon™ tubing will be connected to either the purge pump or the canister assembly described in the previous paragraph. All connections and valves in the sampling train will be Swagelock™ type. A new pair of Nitrile gloves should be worn while connecting the sample assembly for each soil vapor probe.

When collecting duplicate or QA samples, two separate canister assemblies are connected using a stainless steel “T” fitting, and the “T” fitting is then connected to the Teflon™ tubing assembly described

in the previous paragraph. The "T" fitting will be provided by the laboratory. Figure 11 of the USEPA SOP in Appendix C shows the sample assembly for collecting a duplicate sample.

3.2.4.2 Purging Soil Vapor Probes

Allow the probe to equilibrate for a minimum of 24 hours from the time of installation before initiating purge procedures. Teflon™ tubing coming from the soil vapor probe will be connected to a peristaltic pump. The vapor probe will be purged by removing a volume of air equal to three times the volume of the sample probe. Purging will be conducted using a flow rate of 100 to 200 milliliters per minute (mL/min). Given the small volume of the sample probes (approximately two to six inches in length depending on floor slab thickness and 1/4-inch in diameter), purge air can be discharged to the atmosphere.

3.2.4.3 Mechanical Leak Testing

Perform a mechanical leak test immediately after purging the probe by connecting an evacuated 1L Summa™ canister to the Teflon™ tubing assembly and closing the ball valve connecting the two pieces of Teflon™ tubing. Vacuum test the connections between the Summa™ canister and valve by opening the canister valve to place a test vacuum on the assembly for 10 minutes. The start time and initial vacuum, as well as the stop time and final vacuum, will be recorded on the Field Data Air Sampling Form and in the field logbook. If gauge vacuum can not be maintained for 10 minutes, work shall be suspended and all fittings in the sample assembly will be checked. Retest the sample assembly. If vacuum still can not be maintained for 10 minutes, sampling activities will be discontinued until leak can be identified and addressed.

If gauge vacuum was maintained for 10 minutes, close the canister valve and immediately proceed with sample collection as described in Section 3.2.4.4.

3.2.4.4 Sample Collection

Sample location information, meteorological conditions (temperature, barometric pressure, wind speed/direction, and relative humidity), and results of the field screening analysis shall be recorded on the Field Data Air Sampling Form provided in Appendix A. Meteorological data will be obtained online from the nearest National Weather Service measuring station. Digital photos will be taken of each sample location and sample assembly. Sub-slab soil vapor sampling requirements, including sample identifier, sample duration, analytical method, and QC sample requirements are summarized on Table 3-1.

Fittings/connections will be tested for seal integrity by using isopropyl alcohol as a leak indicator compound. The canister will already be connected to the soil vapor probe from performing the

mechanical leak test. To set up the sampling apparatus for leak testing, biscuit dough will be wrapped around each connecting joint above grade and the connection between the sampling assembly and the soil vapor probe. Using prepackaged isopropyl alcohol cloths, an isopropyl alcohol cloth shall be placed on each biscuit-wrapped connecting joint exposed above grade. Wrapping the joints in biscuit dough prior to applying the isopropyl alcohol cloths provides an additional seal and helps keep the isopropyl alcohol from directly contacting the fittings or the tubing. Cloth should be kept off of fittings, tubing, and concrete to the extent possible. Liquid isopropyl alcohol shall not be poured directly on the tubing, connections, or concrete slab. Aluminum foil shall be used to hold the cloth in place. The aluminum foil will be wrapped in a manner that creates an enclosed airspace inside the aluminum foil. A small opening, just large enough to fit the probe from a photoionization detector (PID), will be created in the aluminum foil. A calibrated PID will be used to obtain a field measurement of the concentration of isopropyl alcohol inside the aluminum foil wrapping. The PID shall be calibrated using manufacturer-approved standards at the start of each day of field work. A calibration check shall be performed at midday and at the end of the day, recalibrating as necessary during the midday check. Perform calibration checks and recalibrate throughout the day as needed if readings appear abnormal. After obtaining the PID reading, the hole in the aluminum foil will immediately be crimped closed. Record the PID measurements for each aluminum foil wrapped joint/fitting in the sample train assembly on the Field Data Air Sampling Form.

Open the sample canister valve to begin sample collection. The time and initial vacuum when sample collection starts shall be recorded on the Field Data Air Sampling Form. The laboratory-provided flow regulators will be calibrated for a 5- to 10-minute sample duration, which correlates to a flow rate of 100 to 200 mL/min. Close the sample canister valve when the vacuum gauge indicates approximately 5 inches Hg (mercury) of vacuum remain in the canister. Sample collection should take approximately 5 minutes for a 1L Summa™ canister connected to a 200 mL/min flow regulator. The time sample collection was stopped and final vacuum shall be recorded on the Field Data Air Sampling Form. Remove the flow regulator/particulate filter and vacuum gauge assembly and replace the laboratory-supplied brass plug on the canister. Disconnect the sample tubing assembly and replace the plug on the soil vapor probe.

Label the sample canister and record on the COC the sample name, date and time the sample was collected, the canister and flow controller serial numbers, and the final vacuum gauge reading. Samples shall not be chilled or subjected to extreme temperature or pressure fluctuations. Samples will be shipped to Columbia for analysis of VOCs, including isopropyl alcohol, by USEPA Method TO-15.

3.2.4.5 Quality Control

QC samples will be collected during soil vapor sampling activities. Trip blanks, field duplicates, and QA samples will be collected as indicated on Table 3-1. Field duplicates and QA split samples will be collected at the rate of one duplicate/QA sample per 10 soil vapor samples (i.e., 10 percent). Normally field duplicates and QA samples are collected from the same location; however, the "T" connectors used to collect duplicate samples can not be used to collect three simultaneous samples. Therefore, the duplicate and QA samples will be collected from separate locations.

A trip blank, consisting of an unopened evacuated canister, will be shipped with the sub-slab vapor samples on each day of sampling. Trip blanks can consist of either unopened fully evacuated canisters or canisters that have been fully charged with zero grade air by the laboratory. Since a fully charged canister has no vacuum with which to pull contaminants into the canister, a fully evacuated canister has a better likelihood of capturing potential transit-related contamination. The trip blank will be provided by the laboratory. Further information regarding acceptance criteria for trip blank results is provided in the attached QAPP.

3.2.5 Equipment Decontamination Procedures

All equipment that could potentially contact contaminated media will be dedicated and/or disposable. Therefore, no equipment decontamination will be required.

3.2.6 Investigation-Derived Waste (IDW)

The sub-slab vapor probe installation and sampling will generate small amounts of solid IDW including, concrete dust, gloves, isopropyl alcohol cloths, drill bits, and tubing. This material will be bagged and disposed of as a municipal waste in accordance with applicable regulations. No liquid IDW will be generated.

3.3 INDOOR AIR SAMPLING (PHASE 2 INVESTIGATION)

3.3.1 Indoor Air Sampling Overview and Rationale

The second phase of the vapor intrusion investigation consists of collecting indoor air samples from a subset of the buildings where sub-slab soil vapor samples were collected. As described in Section 2.2.3, indoor air sampling locations will be determined based on the results of the sub-slab soil vapor sampling. Indoor air samples will be collected from buildings where one or more sub-slab soil vapor samples showed chemical concentrations exceeding the screening levels in Table 2-1.

Depending on building size, one, two, or three samples will be collected from each building that is identified for indoor air sampling. The number of indoor air samples to be collected correlates with the number of sub-slab soil vapor samples being collected. Three indoor air samples will be collected from buildings where two sub-slab samples will be collected. Due to the small building size, only one indoor air sample is planned for the Former DOD 628 and the Composites Laboratory.

Table 3-2 shows the potential sampling requirements for the indoor air sampling. Since it is unknown at this time which buildings will be sampled, the analytical parameters are marked with a question mark and the duplicate and QA sample columns have been left blank. A letter addendum to this work plan that provides a sample location figure and an updated version of Table 3-2 will be submitted to CENWK for approval prior to commencing field activities.

3.3.2 Indoor Air Quality Building Survey

An initial building survey will be completed prior to conducting the sub-slab soil vapor sampling for purposes of gathering general information regarding building construction, use, and activities that could generate VOCs. A second building survey is planned prior to collecting the indoor air samples. The purpose of the second building survey is to confirm and update the initial building survey and provide detailed documentation of potential indoor VOC sources. The Building Questionnaire form that was completed for the initial building survey will be reviewed and updated as necessary. Additionally, the detailed listing of potential indoor VOC sources will be documented on the Indoor Air Quality Building Survey form provided in Appendix A. This form was taken without modification from the KDHE SOP provided in Appendix C.

3.3.3 Indoor Air Sampling Procedures

Prior to collecting the indoor air samples, a preliminary screening will be conducted of the sample locations. Preliminary screening will be conducted using a calibrated PID, and the readings will be recorded on the Field Data Air Sampling Form included in Appendix A. PID readings showing organic vapor levels that are higher than those measured in the sub-slab soil vapor samples may be indicative of a significant indoor VOC source, in which case the sample location should be moved to an area that is not measurably impacted by an indoor source. In addition to the PID readings, environmental conditions such as temperature, wind speed, barometric pressure, and humidity will also be recorded. Meteorological data will be obtained online from the nearest National Weather Service measuring station.

Indoor air samples will be collected using individually-certified 6L Summa™ canisters. The canisters will be individually certified by the laboratory for low-level VOC analysis. The laboratory will provide a

pre-calibrated flow regulator with integrated particulate filter. The flow regulator will be set to allow an 8-hour sample duration for the commercial buildings and, if sampled, a 24-hour sample duration for the two residence halls (Harbin Hall and Residence Hall). The flow regulator/particulate filter and vacuum gauge will be attached to the canister as shown on Figure 3-1 and described in the *Summa Canister Instructions* provided by the laboratory and included in Appendix C.

Canisters will be placed in the breathing zone and away from windows, ventilation registers, or areas of high heat and/or humidity. The canisters should be centrally located within a room, although consideration must be given to minimizing disruption of the building occupants' routine activities. If samples are collected from the residence halls, to the extent practical sample canisters should be placed in areas where they are not openly visible and prone to vandalism. At least one indoor air sample will be collected from the lowest floor of the building, and at least one sample should be collected from the lowest occupied floor of the building if the lowest floor of the building is not routinely occupied.

Begin sample collection by opening the canister valve as described in the *Summa Canister Instructions*. Record the time sampling begins and the initial canister pressure on the Field Data Air Sampling Form. Near the end of the designated sampling period, check the canister vacuum pressure. The canister valve should be closed when the vacuum gauge indicates 5 inches Hg of vacuum remains in the canister. Close the canister valve and record the time sampling was completed and the final canister pressure. Remove the flow regulator/particulate filter and vacuum gauge assembly and replace the laboratory-supplied brass plug on the canister.

Label the sample canister and record on the COC the sample name, date and time sample was collected, and the canister and flow controller serial numbers. Samples should not be chilled or subjected to extreme temperature or pressure fluctuations. Samples should be shipped to Columbia for analysis of VOCs. Only chemicals that were detected in the sub-slab samples at concentrations exceeding the sub-slab soil vapor screening levels will be included on the analyte list for the indoor air samples. At this point in time it is planned that the indoor air samples will be analyzed by USEPA Method TO-15. If review of the sub-slab soil gas data indicates that the analyte list will include chemicals for which TO-15 does not provide adequate reporting limits, the analytical method may be changed to USEPA Method TO-15 SIM (selective ion monitoring). The final determination of the indoor air analyte list and analytical method will be addressed in the letter addendum to this work plan that will be provided to CENWK prior to initiating field activities.

3.3.4 Ambient Air Sampling

Ambient air samples will be collected concurrently with the indoor air samples to provide a measure of background concentrations of VOCs in outdoor air. Up to three ambient air samples may be collected, one from each area contained within a closed 100 μg/L contour interval, depending on the locations of the buildings where indoor air samples will be collected. For example, if buildings in the northern contour line require indoor air testing, then an ambient air sample will be collected from within the northern contour line.

Ambient air samples will be collected using individually-certified 6L Summa™ canisters equipped with laboratory-provided flow regulators/particulate filters and vacuum gauges (see Section 3.3.3 for assembly information). For ambient air samples collected in the south and central areas, the flow regulator will be set to allow an 8-hour sample duration. If either of the residence halls in the north area requires indoor air sampling, then the ambient air sample in the north area will be collected over a 24-hour duration. If only commercial buildings in the north area require indoor air sampling then the flow regulator will be set to allow an 8-hour sample duration. The differing sample durations account for the differences in the likely exposure time for a resident in comparison to a commercial worker.

Begin sample collection by opening the canister valve as described in the *Summa Canister Instructions*. Record the time sampling begins and the initial canister pressure on the Field Data Air Sampling Form. Near the end of the designated sampling period, check the canister vacuum pressure. The canister valve should be closed when the vacuum gauge indicates 5 inches Hg of vacuum remains in the canister. Close the canister valve and record the time sampling was completed and the final canister pressure. Remove the flow regulator/particulate filter and vacuum gauge assembly and replace the laboratory-supplied brass plug on the canister.

Label the sample canister and record on the chain of custody the sample name, date and time sample was collected, and the canister and flow controller serial numbers. Samples should not be chilled or subjected to extreme temperature or pressure fluctuations. Samples should be shipped to Columbia for analysis of VOCs. At this point in time it is planned that the ambient air samples will be analyzed by USEPA Method TO-15. If review of the sub-slab soil gas data indicates that the analyte list will include chemicals for which TO-15 does not provide adequate reporting limits, the analytical method may be changed to USEPA Method TO-15 SIM. The final determination of the indoor air analyte list and analytical method will be addressed in the letter addendum to this work plan that will be provided to CENWK prior to initiating field activities.

3.3.5 Quality Control

QC samples, including trip blanks, field duplicates, and QA samples, will be collected during indoor air sampling activities. Field duplicates and QA split samples will be collected at the rate of one duplicate/QA split sample per 10 indoor air samples (i.e., 10 percent). Since the location and number of indoor air samples has not yet been determined, the exact number of field duplicates and QA samples is unknown. The number and proposed locations of field duplicates will be identified in the letter addendum to this work plan. Field duplicates and QA samples will be collected by placing the canisters directly adjacent to each other. Since a "T" connector is not required for indoor air samples, the field duplicate and the QA sample will be collected from the same location.

A trip blank, consisting of an unopened evacuated canister, will be shipped with the sub-slab vapor samples on each day of sampling. Trip blanks can consist of either unopened fully evacuated canisters or canisters that have been fully charged with zero grade air by the laboratory. Since a fully charged canister has no vacuum with which to pull contaminants into the canister, a fully evacuated canister has a better likelihood of capturing potential transit-related contamination. The trip blank will be provided by the laboratory. Further information regarding acceptance criteria for trip blank results is provided in the attached QAPP.

3.4 SAMPLE ANALYSIS AND VALIDATION

Sub-slab soil vapor and indoor air samples are summarized on Tables 3-1 and 3-2, respectively. With the exception of QA samples, the sub-slab soil vapor and indoor air samples will be sent to Columbia for analysis. QA samples will be sent to STL-Burlington. Sub-slab soil vapor and indoor air samples will be analyzed using USEPA Method TO-15. If it is determined that TO-15 does not provide adequate reporting limits for the specific analyte list required for the indoor samples, the analytical method may be changed to TO-15 SIM for the indoor air samples. Reporting limits for both laboratories are provided on Table 3-3. The indoor air samples will only be analyzed for those compounds that were detected in the sub-slab soil vapor samples at concentrations exceeding the sub-slab screening levels. The laboratory will analyze samples according to the methods and procedures described in the QAPP.

Results of the QC samples will be evaluated by BMcD personnel to verify the usability of analytical data for purposes of evaluating the vapor intrusion pathway. Data validation will follow those procedures outlined in the QAPP. Part of the validation procedures will include evaluating the data for evidence of leaks in the sample train. Isopropyl alcohol is the leak test compound being used for this Site. If isopropyl alcohol is detected in the sub-slab soil vapor at a concentration exceeding 5 percent of the starting concentration, the data will be qualified as estimated. Data will be qualified as rejected if the

isopropyl alcohol concentration in the sub-slab soil vapor sample exceeds 10 percent of the starting concentration. The starting concentration will equal the average of the PID readings from each isopropyl alcohol-wrapped fitting in an individual sample assembly. Using this method, each sample location will have a sample-specific starting concentration that will be used to determine the presence of leaks in the probe and/or sample assembly. A Quality Control Summary Report (QCSR) for the sub-slab soil vapor sample results will be included in the Interim Data Report, and a QCSR for the indoor air sample results will be included in the Vapor Intrusion Report.

3.5 CHAIN OF CUSTODY / DOCUMENTATION

3.5.1 Sample Chain of Custody

At all times sample custody must be maintained by the field team. In the field, sample custody is maintained when one or more of the following criteria are met: 1) The samples are in the possession of the sampling team; 2) the samples are in the view of the sampling team; or 3) the samples are stored in a designated secure area.

3.5.2 Chain of Custody Form

The COC form, provided in Appendix A, acts as a transmittal form for the analytical samples as sample possession passes from the sampling team to the analytical laboratory. It is the documentation that ensures that sample custody is maintained. It also provides the laboratory with critical information regarding the samples delivered. The information contained on the COC form shall include: project name, project number, matrix of sample, sample identifier, date and time of sample collection, canister ID, flow controller ID, USEPA analytical method and remarks. A completely filled out COC shall be included in each shipping container sent to the analytical laboratory.

3.5.3 Sample Identification Nomenclature

Each sub-slab soil vapor, indoor air, and ambient air sample will be labeled with a unique identifier. Sub-slab soil vapor sample numbers will consist of the Sample Point and Sample Designator, with appropriate modifiers:

- Sample Point – This will be the soil vapor probe identification (ID) (i.e., 624P01). The first two or three alphanumeric characters of the sample point reflect the building where the probe is installed (i.e., 624 or CL), followed by the designation ‘P’ for vapor probe and the individual probe number within a given building (i.e., P01 or P02).

- Sample Designator – This will consist of the letters 'SL', followed by a numeric descriptor. The numeric descriptor will indicate the calendar year and sampling round (i.e., 0601 indicates that this is the first sample collected in 2006).

In addition, the following conventions will be used for QA/QC samples:

- QC (Field Duplicate) – the last two digits of the numeric descriptor in the sample designator will be changed to double the digit indicating the sampling round. For example, the sample designator SL0601 for the first sampling round in 2006 will be changed to SL0611.
- QA – the letters 'QA' will be added after the sample designator.

The nomenclature for indoor air samples is similar to that being used for the sub-slab soil vapor samples. The indoor air sample identifier will consist of the Sample Point and Sample Designator, with appropriate modifiers.

- Sample Point – This will be the indoor air sample location ID (i.e., 624A01). The first two or three alphanumeric characters of the sample point reflect the building where the indoor air sample will be collected (i.e., 624 or CL), followed by the designation 'A' for air and the individual sample number within a given building (i.e., A01, A02, or A03).
- Sample Designator – This will consist of the letters 'IA' for the indoor air samples, followed by a numeric descriptor. The numeric descriptor will indicate the calendar year and sampling round (i.e., 0601 indicates that this is the first sample collected in 2006). For ambient air samples the sample designator will start with the letters 'AA', followed by the same type of numeric descriptor being used for the indoor air samples.

In addition, the following conventions will be used for QA/QC samples:

- QC (Field Duplicate) – the last two digits of the numeric descriptor in the sample designator will be changed to double the digit indicating the sampling round. For example, the sample designator IA0601 for the first sampling round in 2006 will be changed to IA0611.
- QA – the letters 'QA' will be added after the sample designator.

3.5.4 Field Logbook

Bound field logbooks will be used for the maintenance of field records. A logbook will be dedicated specifically to this project. The BMcD field personnel's name, project name, and project number will be entered on the inside of the front cover of the logbook. All entries will be dated and the time of entry

recorded. At the end of each day's activity, or at the entry of a particular event, the investigator will draw a diagonal line at the conclusion of the entry and initial indicating the conclusion of the entry of the day's activity. All aspects of sample collection and handling as well as visual observations shall be documented in the field logbooks. Documentation will be recorded in pre-numbered bound notebooks using indelible ink pens in sufficient detail so that decision logic may be traced back once reviewed. Documentation will include but not be limited to:

- Project name
- Sampling location
- Date and times
- Sampling personnel present (identify responsibilities, if applicable)
- Level of personal protection equipment worn
- Weather or any environmental condition which may affect the samples
- Equipment utilized
- Calibration data for field screening instruments
- Deviations from the approved WP/SAP
- Notating of the system for identifying and tracking all samples taken to their associated QC samples
- Visitors to the site
- Investigation name, initials, and date on each page
- Lining out of any remaining blank portions or pages with a signature and date
- Sampling procedures

All entries in field logbooks will be legibly recorded with black ink, and contain accurate and inclusive documentation of an individual's project activities. Since field records are the basis for written reports, language will be objective, factual, and free of personal feelings or other terminology, which might prove inappropriate. Once completed, these field logbooks become accountable documents and are maintained as part of the permanent project files. All data recorded on the Field Data Air Sampling Form will be duplicated in the logbook.

3.5.5 Field Forms

On a daily basis, and as appropriate, various field forms will be filled out to document aspects of the fieldwork to be performed. Forms include: the DQCR, Field Data Air Sampling Forms, sample labels and the COC. The DQCR will be filled out on a daily basis to document the work performed, problems

encountered and their resolution. A COC form shall be filled out and enclosed in all sample-laden shipping containers. Copies of all field forms to be used for the former Schilling AFB Site are located in Appendix A of this WP/SAP. Analytical sample labels will be completely filled out so that sample identity can be ascertained. Attach the sample label to the canister using the plastic ties provided by the laboratory. Do not tape, glue, or otherwise affix the label directly to the canister.

3.6 SAMPLE HANDLING AND SHIPMENT

Once collected, the sample canisters will be placed back in the shipping boxes used by the laboratory. The samples shall not be chilled or subject to extreme variations in pressure or temperature. Once sampling is completed for the day, the sampling team shall prepare the samples for shipment. The packaging requirements are as follows:

- Verify that the sample canister is adequately identified with a properly filled out label.
- Each canister shall be placed in an individual box and the individual boxes should then be placed into the shipping container. Wrap the flow regulator/particulate filter and vacuum gauge in the bubble wrap provided by the laboratory and include the flow regulator/particulate filter and vacuum gauge in the individual canister box.
- The box used by the laboratory to ship the canisters to the Site should be used as the shipping container to return the canisters to the laboratory.
- The original COC form shall be placed in a plastic bag and inside the shipping container, but outside of the individual canister boxes.
- Close shipping container and tape shut with packing tape.
- Affix a minimum of two signed custody seals on opposite sides of the shipping container.
- A Federal Express (FedEx) air-bill will be completely filled out for both laboratories. Field samples will be shipped to Columbia and QA samples will be shipped to STL-Burlington. The shipping addresses are provided in Sections 2.1.4 and 2.1.5, respectively.
- The shipping container(s) will be delivered directly to a FedEx agent or to an authorized agent for shipment. The full service FedEx office in Salina, Kansas is located at 3450 Centennial Road. It accepts express shipments until 6:00 p.m. For additional questions regarding shipping, contact FedEx at 1-800-463-3339.

3.7 SAMPLE LOCATION MAPPING

The field sampling team will sketch a schematic drawing of the buildings being sampled to identify the locations of the soil vapor probes and indoor air samples within each individual building. If available

from the building owner or manager, building floor plan drawings will be used to supplement the field sketch.

* * * * * *

4.0 REFERENCES

United States Army Corps of Engineers – Kansas City District (USACE-CENWK), 2005, *Final Remedial Investigation for Operable Unit One at the Former Schilling Air Force Base, Salina, Kansas.* September.

United States Environmental Protection Agency (USEPA), 2002. *Draft Guidance for Evaluating the Vapor Intrusion to Indoor Air Pathway from Groundwater and Soils (Subsurface Vapor Intrusion Guidance).* Office of Solid Waste and Emergency Response. November 29.

* * * * * *

Tables

Table 2-1
Screening Levels for TO-15 Analytes
Operable Unit 1 Vapor Intrusion Investigation
Former Schilling Air Force Base

	Sub-Slab Soil Vapor		
Analyte	**1E-5 Cancer Risk (ug/m^3)**	**0.1 Hazard Quotient (ug/m^3)**	**Sub-Slab Screening Level[1] (ug/m^3)**
Acetone	-	6,051	6,051
Benzene	70	58	58
Bromodichloromethane	30	134	30
Bromoform (tribromomethane)	489	134	134
Bromomethane (methyl bromide)	-	10	10
Butanone, 2- (MEK)	-	9,413	9,413
Carbon disulfide	-	1,345	1,345
Carbon tetrachloride	36	4.7	4.7
Chlorobenzene	-	114	114
Chloroethane	649	19,211	649
Chloroform[2]	23	94	94
Chloromethane (methyl chloride)	-	175	175
Dibromochloromethane	22	134	22
Dibromoethane, 1,2- (EDB)	0.94	17	0.94
Dichlorobenzene, 1,2-	-	384	384
Dichlorobenzene, 1,3-	-	202	202
Dichlorobenzene, 1,4-	86	1,546	86
Dichloroethane, 1,1-	-	961	961
Dichloroethane, 1,2- (EDC)	21	9.4	9.4
Dichloroethylene, 1,1-	-	383	383
Dichloroethylene, cis-1,2-	-	67	67
Dichloroethylene, trans-1,2-	-	134	134
Dichloropropane, 1,2-	28	7.7	7.7
Dichloropropene, 1,3-	134	38	38
Ethylbenzene	-	1,950	1,950
Hexanone, 2- (MBK)	-	-	-
Isopropyl alcohol (2-propanol)	-	-	-
Methyl tertbutyl ether (MTBE)	2,069	5,762	2,069
Methyl-2-pentanone, 4- (MIBK)	-	5,782	5,782
Methylene chloride	1,144	5,763	1,144
Styrene	-	1,950	1,950
Tetrachloroethane, 1,1,2,2-	9.4	403	9.4
Tetrachloroethylene (PCE)	90	67	67
Toluene	-	740	740
Trichloroethane, 1,1,1-	-	4,236	4,236
Trichloroethane, 1,1,2-	34	27	27
Trichloroethene (TCE) (CAL-EPA)	269	1,143	269
Trichloroethene (TCE) (NCEA)	4.7	67	4.7
Trichlorofluoromethane (Freon 11)	-	1,345	1,345
Trichlorotrifluoroethane (Freon 113)	-	-	-
Vinyl chloride (adult exposure only)	118	192	118
Xylenes	-	195	195

Notes:

ug/m^3 - Micrograms per cubic meter

"--" - Not available

For TCE, screening levels were calculated using both the California Environmental Protection Agency and proposed USEPA slope factors

[1] - Screening level represents the lower of the cancer-based or noncancer-based screening levels.

[2] - Chloroform is not carcinogenic unless concentrations exceed hazard quotient of 1: therefore screening level is based on the noncancer screening level.

Table 3-1
Sub-Slab Soil Vapor Sampling Requirements
Operable Unit 1 Vapor Intrusion Investigation
Former Schilling Air Force Base

	Sample Identifier				Parameters	QA/QC Requirements		
Building Name	**Sample Point**	**Sample Designator**	**Sample Type**	**Sample Duration**	**VOCs**	**Field Duplicate (10%)**	**QA Sample (10 %)**	**Analytical Method**
Former DOD 624	624P01	SL0601	Sub-slab	5-10 minutes	X			TO-15
	624P02	SL0601	Sub-slab	5-10 minutes	X			TO-15
Former DOD 628	628P01	SL0601 & SL0601QA	Sub-slab	5-10 minutes	X		X	TO-15
Auto Mechanic Building	638P01	SL0601	Sub-slab	5-10 minutes	X			TO-15
(Former DOD 638)	638P02	SL0601 &SL0611	Sub-slab	5-10 minutes	X	X		TO-15
Vocational -Technical	658P01	SL0601	Sub-slab	5-10 minutes	X			TO-15
Building (Former DOD 658)	658P02	SL0601	Sub-slab	5-10 minutes	X			TO-15
Raytheon Hangar	724P01	SL0601	Sub-slab	5-10 minutes	X			TO-15
(Former DOD 724)	724P02	SL0601	Sub-slab	5-10 minutes	X			TO-15
Former DOD 837	837P01	SL0601	Sub-slab	5-10 minutes	X			TO-15
	837P02	SL0601	Sub-slab	5-10 minutes	X			TO-15
Composites Laboratory (CL)	CLP01	SL0601	Sub-slab	5-10 minutes	X			TO-15
Harbin Hall (HH)	HHP01	SL0601& SL0611	Sub-slab	5-10 minutes	X	X		TO-15
	HHP02	SL0601	Sub-slab	5-10 minutes	X			TO-15
Residence Hall (RH)	RHP01	SL0601 & SL0601QA	Sub-slab	5-10 minutes	X		X	TO-15
	RHP02	SL0601	Sub-slab	5-10 minutes	X			TO-15
Technology Center (TC)	TCP01	SL0601	Sub-slab	5-10 minutes	X			TO-15
	TCP02	SL0601	Sub-slab	5-10 minutes	X			TO-15
College Center (CC)	CCP01	SL0601	Sub-slab	5-10 minutes	X			TO-15
	CCP02	SL0601	Sub-slab	5-10 minutes	X			TO-15
Trip Blank					X			TO-15

Notes:

QA - Quality assurance

QC - Quality control

VOC - Volatile organic compound

One trip blank will be collected for every day in the field.

Trip blanks will be named TB with sample collection date.

Sub-slab soil vapor samples will be analyzed for the full TO-15 analyte list (see Table 3-3).

Table 3-2
Indoor Air Sampling Requirements
Operable Unit 1 Vapor Intrusion Investigation
Former Schilling Air Force Base

	Sample Identifier				Parameters	QA/QC Requirements		
Building Name	**Sample Point**	**Sample Designator**	**Sample Type**	**Sample Duration**	**VOCs**	**Field Duplicate (10%)**	**QA Sample (10 %)**	**Analytical Method**
Former DOD 624	624A01	IA0601	Indoor Air	8 hours	?			TO-15
	624A02	IA0601	Indoor Air	8 hours	?			TO-15
	624A03	IA0601	Indoor Air	8 hours	?			TO-15
Former DOD 628	628A01	IA0601	Indoor Air	8 hours	?			TO-15
Auto Mechanic Building	638A01	IA0601	Indoor Air	8 hours	?			TO-15
(Former DOD 638)	638A02	IA0601	Indoor Air	8 hours	?			TO-15
	638A03	IA0601	Indoor Air	8 hours	?			TO-15
Vocational - Technical	658A01	IA0601	Indoor Air	8 hours	?			TO-15
Building (Former DOD 658)	658A02	IA0601	Indoor Air	8 hours	?			TO-15
	658A03	IA0601	Indoor Air	8 hours	?			TO-15
Raytheon Hangar	724A01	IA0601	Indoor Air	8 hours	?			TO-15
(Former DOD 724)	724AO2	IA0601	Indoor Air	8 hours	?			TO-15
	724A03	IA0601	Indoor Air	8 hours	?			TO-15
Former DOD 837	837A01	IA0601	Indoor Air	8 hours	?			TO-15
	837A02	IA0601	Indoor Air	8 hours	?			TO-15
	837A03	IA0601	Indoor Air	8 hours	?			TO-15
Composites Laboratory (CL)	CLA01	IA0601	Indoor Air	8 hours	?			TO-15
Harbin Hall (HH)	HHA01	IA0601	Indoor Air	24 hours	?			TO-15
	HHA02	IA0601	Indoor Air	24 hours	?			TO-15
	HHA03	IA0601	Indoor Air	24 hours	?			TO-15
Residence Hall (RH)	RHA01	IA0601	Indoor Air	24 hours	?			TO-15
	RHA02	IA0601	Indoor Air	24 hours	?			TO-15
	RHA03	IA0601	Indoor Air	24 hours	?			TO-15
Technology Center (TC)	TCA01	IA0601	Indoor Air	8 hours	?			TO-15
	TCA02	IA0601	Indoor Air	8 hours	?			TO-15
	TCA03	IA0601	Indoor Air	8 hours	?			TO-15
College Center (CC)	CCA01	IA0601	Indoor Air	8 hours	?			TO-15
	CCA02	IA0601	Indoor Air	8 hours	?			TO-15
	CCA03	IA0601	Indoor Air	8 hours	?			TO-15

Table 3-2
Indoor Air Sampling Requirements
Operable Unit 1 Vapor Intrusion Investigation
Former Schilling Air Force Base

	Sample Identifier				Parameters	QA/QC Requirements		
Building Name	**Sample Point**	**Sample Designator**	**Sample Type**	**Sample Duration**	**VOCs**	**Field Duplicate (10%)**	**QA Sample (10 %)**	**Analytical Method**
Ambient - North	ANA01	AA0601	Outdoor Air	8 or 24 hours	?			TO-15
Ambient - Central	ACA01	AA0601	Outdoor Air	8 hours	?			TO-15
Ambient - South	ASA01	AA0601	Outdoor Air	8 hours	?			TO-15
Trip Blank					?			TO-15

Notes:

QA - Quality assurance

QC - Quality control

VOC - Volatile organic compound

One trip blank will be collected for every day in the field

? - Number of indoor air samples to be determined by sub-slab sampling results

Number and locations of field duplicates and QA samples to be determined by number of indoor air samples to be collected.

Trip blanks will be named TB with sample collection date.

If indoor air samples are collected from either of the residence halls, the ambient air sample will be collected over a 24-hour duration.

Exact analyte list for indoor air samples will consist of those compounds detected in sub-slab samples at concentrations exceeding the sub-slab screening levels.

Table 3-3
Reference Limits for Analytical Method TO-15
Operable Unit 1 Vapor Intrusion Investigation
Former Schilling Air Force Base

Analyte	CAS Number	Columbia Achievable Laboratory Limits[1]		STL - Burlington Achievable Laboratory Limits[1]	
		MDLs ($\mu g/m^3$)	QLs ($\mu g/m^3$)	MDLs ($\mu g/m^3$)	QLs ($\mu g/m^3$)
Acetone	67-64-1	3.1	25	5.23	120
Benzene	71-43-2	0.37	5.1	2.43	6.4
Bromodichloromethane	75-27-4	0.66	5.1	4.42	13
Bromoform	75-25-2	0.86	5.1	8.06	21
Bromomethane	74-83-9	1.1	5.1	3.30	7.8
2-Butanone (MEK)	78-93-3	0.71	5.1	6.78	15
Carbon Disulfide	75-15-0	0.71	5.1	2.18	16
Carbon Tetrachloride	56-23-5	0.61	2.5	4.03	13
Chlorobenzene	108-90-7	0.56	5.1	2.76	9.2
Chloroethane	75-00-3	0.71	5.1	2.90	13
Chloroform	67-66-3	0.38	5.1	1.51	9.8
Chloromethane	74-87-3	0.76	5.1	3.72	10
Dibromochloromethane	124-48-1	0.91	5.1	4.86	17
1,2- Dibromoethane	106-93-4	0.065	1.0	4.61	15
1,2- Dichlorobenzene	95-50-1	0.42	5.1	3.85	12
1,3- Dichlorobenzene	541-73-1	0.56	5.1	3.79	12
1,4- Dichlorobenzene	106-46-7	0.39	5.1	4.81	12
1,1- Dichloroethane	75-34-3	0.56	5.1	2.19	8.1
1,2- Dichloroethane	107-06-2	0.41	5.1	2.95	8.1
1,1- Dichloroethene	75-35-4	0.96	5.1	2.19	8.1
cis- 1,2- Dichloroethene	156-59-2	0.39	5.1	3.29	7.9
trans- 1,2- Dichloroethene	156-60-5	0.38	5.1	2.85	7.9
1,2- Dichloropropane	78-87-5	0.26	5.1	3.70	9.2
cis- 1,3- Dichloropropene	10061-01-5	0.29	5.1	3.95	9.1
trans- 1,3- Dichloropropene	10061-02-6	0.42	5.1	3.95	9.1
Ethylbenzene	100-41-4	0.26	5.1	3.95	8.7
2-Hexanone (MBK)	591-78-6	0.39	5.1	3.36	20
Isopropyl alcohol (2-propanol)	67-63-0	0.61	5.1	4.00	120
Methyl tert-butyl ether	1634-04-4	0.56	5.1	3.50	18
Methylene chloride	75-09-2	0.71	5.1	7.64	17
4- Methyl- 2- pentanone (MIBK)	108-10-1	0.44	5.1	3.20	20
Styrene	100-42-5	0.4	5.1	4.69	8.5
1,1,2,2- Tetrachloroethane	79-34-5	0.56	2.5	4.87	14

Table 3-3
Reference Limits for Analytical Method TO-15
Operable Unit 1 Vapor Intrusion Investigation
Former Schilling Air Force Base

Analyte	CAS Number	Columbia Achievable Laboratory Limits[1]		STL - Burlington Achievable Laboratory Limits[1]	
		MDLs ($\mu g/m^3$)	QLs ($\mu g/m^3$)	MDLs ($\mu g/m^3$)	QLs ($\mu g/m^3$)
Tetrachloroethene (PCE)	127-18-4	0.86	5.1	6.51	14
1,1,1- Trichloroethane	71-55-6	0.1	5.1	3.16	11
1,1,2- Trichloroethane	79-00-5	0.76	5.1	3.33	11
Trichloroethene (TCE)	79-01-6	0.66	2.5	3.71	11
Trichlorofluoromethane (Freon 11)	75-69-4	0.38	5.1	2.30	11
Trichlorotrifluoroethane (Freon 113)	76-13-1	0.96	5.1	5.82	15
Toluene	108-88-3	0.19	5.1	2.86	7.5
Vinyl chloride	75-01-4	0.56	5.1	1.51	5.1
m, p- Xylenes	136777-61-2	0.66	5.1	8.25	22
o- Xylene	95-47-6	0.56	5.1	2.56	8.7

Notes:

$\mu g/m^3$ - Micrograms per cubic meter

MDL - Method detection limit

QL - Quantitation limit

1- Achievable MDLs and QLs are limits that the individual laboratory can achieve when performing a specific analytical method.

Figures

Figure 1-1

SITE MAP

FORMER SCHILLING AIR FORCE BASE
SALINA, KANSAS

\\GISSRV\Projects\Schilling\ArcArcDocs\Vapor Intrusion\Figure1-1_SiteMap.mxd dls dm 14800 06/19/2006

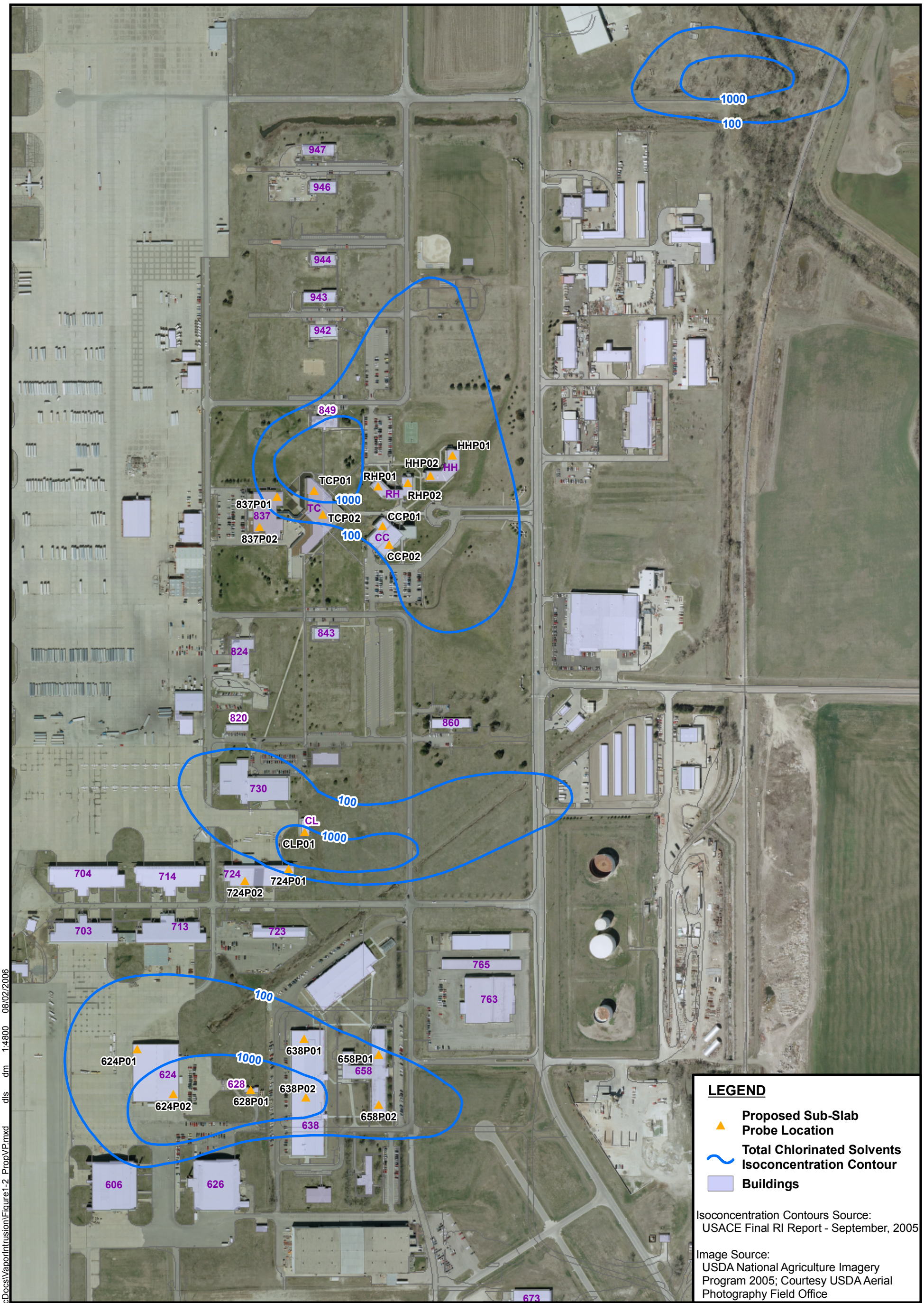

LEGEND

- Proposed Sub-Slab Probe Location
- Total Chlorinated Solvents Isoconcentration Contour
- Buildings

Isoconcentration Contours Source:
USACE Final RI Report - September, 2005

Image Source:
USDA National Agriculture Imagery Program 2005; Courtesy USDA Aerial Photography Field Office

NORTH

400 200 0 400 800
SCALE IN FEET

Burns & McDonnell
SINCE 1898

Figure 1-2

PROPOSED SUB-SLAB VAPOR PROBE LOCATIONS

FORMER SCHILLING AIR FORCE BASE
SALINA, KANSAS

\\GISSRV\Projects\Schilling\Arc\ArcDocs\VaporIntrusion\Figure1-2_PropVP.mxd dls dm 1:4800 08/02/2006

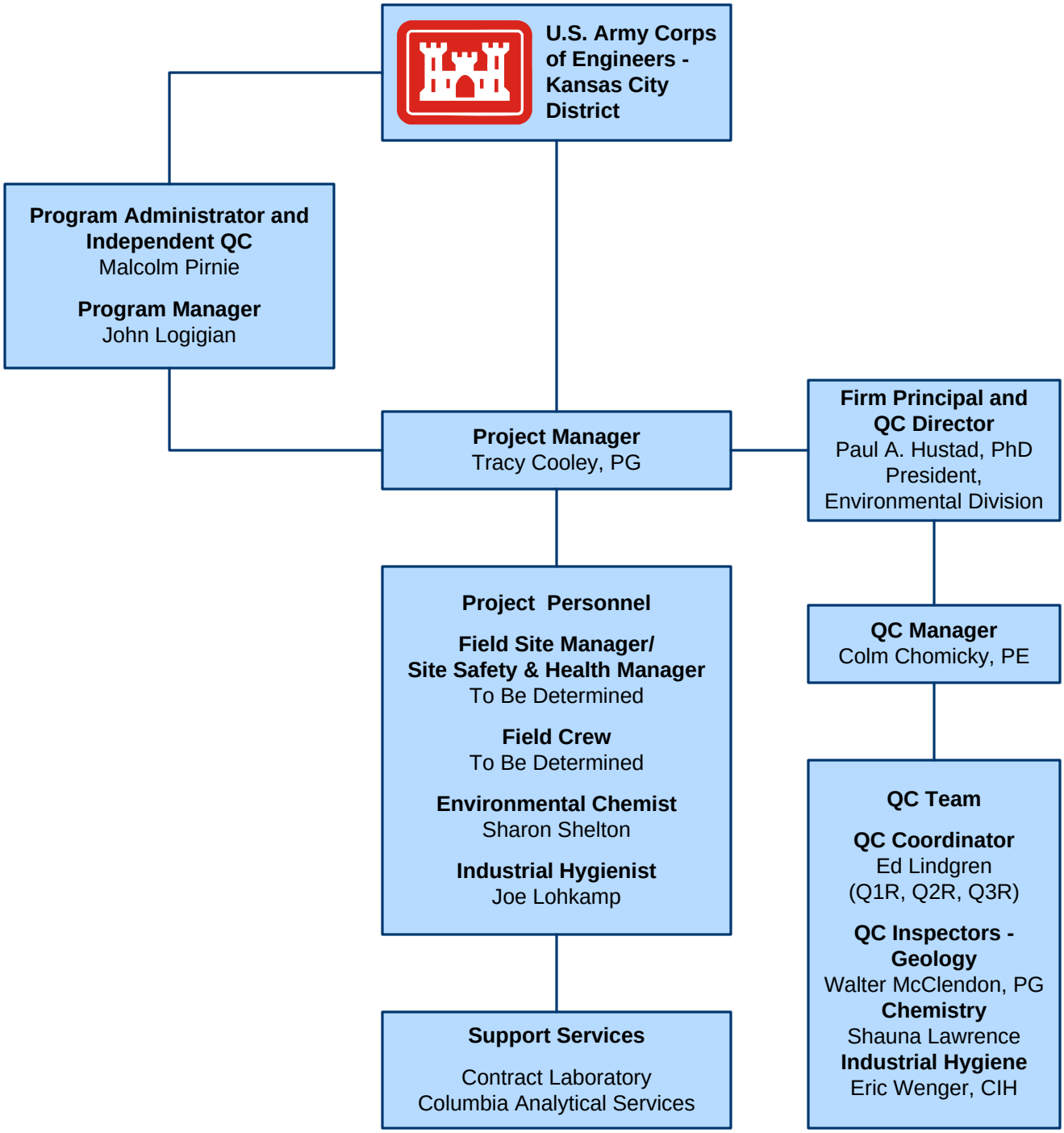

Notes:
BMcD will inform USACE of the Field Site Manager and members of the Field Crew when selected.

Burns & McDonnell
SINCE 1898

Figure 2-1
Organization Chart
Schilling CERCLA Support
Salina, Kansas

COPYRIGHT © 2006 BURNS & McDONNELL ENGINEERING COMPANY, INC.

6 LITER SUMMA CANISTER ASSEMBLY

1 LITER SUMMA CANISTER ASSEMBLY

Burns & McDonnell SINCE 1898

Figure 3-1

6 LITER & 1 LITER SUMMA CANISTER ASSEMBLIES

FORMER SCHILLING AIR FORCE BASE
SALINA, KANSAS

Appendix A

Field Forms

DAILY QUALITY CONTROL REPORT

Site: _____
Project No: _____
Date: _____
Crew No: _____
Crew Mem: _____

Weather (circle)

	Bright Sun	Clear	Overcast	Rain	T-storm	Snow
Temp:	to 32	32-50	50-70	70-85	85+	
Wind:	Still	Gusty	Moder.	High	**Direction:**	
Humidity:	Dry	Moder.	Humid			

Subcontractors and Equipment on Site: _____

Health and Safety Levels: (circle)

D	Mod. D.	C	B	A

Summary of Health and Safety Activities: _____

Instrument Used: (circle)
Calibrated: (check)

PID	Fe	pH	Cond.	Temp.	Turbidity	DO	ORP

For actual calibration results, see field calibration forms.

Summary of Work Performed: _____

All Samples Were Collected According to Procedures Outlined in the Work Plan?
Yes _____ No _____

Problems Encountered/Corrective Action Taken: _____

Time Project Manager Contacted: _____

Tomorrow's Expectations: _____

Name: _____ Signature: _____

BUILDING QUESTIONNAIRE

Building Type: Residential/Commercial/Multi-Use

Owner/Tenant:_____

Address:_____

Describe Building Uses:_____
_____

Smoker(s): Y/N Product (Cigars, Pipe, Cigarettes):_____ Number Smoked/Day:___

Basement/Crawl Space: Y/N Ventilated: Y/N Living Quarters: Y/N
Basement
Acitivities:_____

Private Well: Y/N Sump: Y/N Cistern: Y/N In Use/Plugged: Y/N

Recent Remodeling: Y/N Activities (painting, new carpet, new cabinets): Y/N
_____

VOC sources (hobbies, paints, solvents, gasoline,
etc):_____
_____

Cleaning Products and
Storage:_____

Attached Garage: Y/N Garage Storage (cars, lawn mower,
etc):_____

Furnace Type (Oil, Natural Gas, Propane):_____ Furnace Intake: Inside/Outside

Addidtional Heating Sources (space heater, etc):_____ Fuel Type:_____

Comments:_____
_____
_____
_____
_____

BUILDING QUESTIONNAIRE (cont.)

CHEMICAL INVENTORY

CHEMICAL NAME	DESCRIPTION	MSDS OBTAINED
		Y/N
		Y/N
		Y/N
		Y/N
		Y/N
		Y/N
		Y/N
		Y/N
		Y/N
		Y/N
		Y/N
		Y/N
		Y/N
		Y/N
		Y/N
		Y/N
		Y/N
		Y/N

FIELD DATA AIR SAMPLING FORM

Site Name:_____ Sampler:_____

Sample Identification:_____/_____ Date Sampled:_____

Sample Location(s):_____
_____

Canister Serial #:_____/_____ Flow Regulator Serial #:_____/_____

Environmental Conditions

Outdoor Temperature:_____ Barometric Pressure:_____ Relative Humidity:_____

Wind Speed/Direction:_____ Comments:_____

Preliminary Screening

Instrumentation:_____ Calibration Date:_____ Time:_____am/pm

Field Reading(s):_____(ppm)/_____(ppm)/_____(ppm)/_____(ppm)

Location(s):_____
_____

Mechanical Leak Test

	Time	Pressure
Start:	_____am/pm	_____"Hg
Stop:	_____am/pm	_____"Hg

Chemical Leak Test

Leak Test Compound:_____

Field Reading(s):_____(ppm)/_____(ppm)/
_____(ppm)/_____(ppm)

Instrumentation Calibration Date & Time:_____

Air Sampling

	Time	Pressure	Controller Flow
Start:	_____am/pm	_____"Hg	_____
Stop:	_____am/pm	_____"Hg	_____
Start:	_____am/pm	_____"Hg	_____
Stop:	_____am/pm	_____"Hg	_____

Indoor Air Quality Building Survey

Date: _____

Address: _____

_____

Residential Contact: _____

Phone: Home: ( ) _____ - _____ Work: ( ) _____ - _____

List of Current Occupants/Occupation:

Age (If under 18)	Sex (M/F)	Occupation

Building Construction Characteristics:

What type of building do you have? (Circle appropriate response)

Single Family	Multiple Family	School	Commercial
Ranch	2-Family		
Raised Ranch	Duplex		
Cape	Apartment House		
Colonial	#of units_____		
Split Level	Condominium		
Mobile Home	#of units_____		
Other_____	Other_____		

Address:_____
Date:_____

Sources of Chemical Contaminants:

Which of these items are present in the building? (Check all that apply)

Potential VOC Source	Location of Source	Used 48 hours prior to sampling (Yes/No/NA)	Use During Sampling (Yes/No/NA)
Paints or paint thinners			
Gas-powered equipment			
Gasoline storage cans			
Cleaning solvents			
Air fresheners			
Oven cleaners			
Carpet/upholstery cleaners			
Hairspray			
Nail polish/polish remover			
Bathroom cleaner			
Appliance cleaner			
Furniture/floor polish			
Moth balls			
Fuel tank			
Wood Stove			
Fireplace			
Perfume/colognes			
Hobby supplies (e g., solvents, paints, lacquers, glues, photographic darkroom chemicals)			
Scented trees, wreaths, potpourri,etc			
Other			
Other			

Drinking Water Usage During Sampling(check all that apply)

Showering_____ Cooking_____ Dishwashing_____ Laundry_____
Other:_____

Columbia Analytical Services INC
An Employee - Owned Company

Air Quality Laboratory
2665 Park Center Drive, Suite D
Simi Valley, California 93065
Phone (805) 526-7161
Fax (805) 526-7270

Chain of Custody Record & Analytical Service Request

Requested Turnaround Time by Close of Business Day (Surcharges) Please Circle:
1 Day (100%) 2 Day (75%) 3 Day (50%) 4 Day (35%) 5 Day (15%) 10 Day-Standard

CAS Project No.

CAS Contact:

Reporting Information (Company Name & Address)

P.O. # / Billing Information

Attention:

Project Name

Phone Fax

Project Number

Email Address for Result Reporting

Sampler (Print & Sign)

Analysis Method and/or Analytes

Comments
e.g. Preservative or specific instructions

Client Sample ID	Date Collected	Time Collected	Lab Sample No.	Sample Type (Air/Liquid /Solid/Tube)	Canister ID (Bar Code#)	Flow Controller (Bar Code #)	Sample Volume					

Report Tier Levels - please select
Tier I - (default if not specified) _____
Tier II (QC forms) _____
Tier III (QC, Raw Data, Spectra) 10% Surcharge _____
Other _____
EDD required Yes / No
Type: _____

Project Requirements (MRLs, QAPP)

Relinquished by: (Signature)	Date:	Time:	Received by: (Signature)	Date:	Time:
Relinquished by: (Signature)	Date:	Time:	Received by: (Signature)	Date:	Time:
Relinquished by: (Signature)	Date:	Time:	Received by: (Signature)	Date:	Time:

Cooler / Blank Temperature _____ °C

Appendix B

Risk-Based Screening Levels

APPENDIX B

RISK-BASED SCREENING LEVELS

This Appendix presents the derivation of risk-based screening levels for indoor air and subslab sampling at the former Schilling Air Force Base (SAFB) in Salina, Kansas. In this study, subslab sampling will be conducted at buildings located over groundwater containing greater than 100 micrograms per liter (µg/L) total chlorinated organic compounds (VOCs). The subslab sample results will be screened against these risk-based screening levels to identify buildings with the highest potential to have unacceptable risk levels for indoor air. Indoor air sampling will then be conducted in the selected buildings. The purpose of this Appendix is to identify the concentrations of TO-15 analytes associated with minimum risk levels needed to support evaluation of risk.

In the first part of this Appendix, indoor air levels associated with 10^{-5} cancer risk and hazard quotient (HQ) of 0.1 were calculated. As the draft Subsurface Vapor Intrusion Guidance (USEPA, 2002) notes, ambient air concentrations and constituents from products and building materials used indoors may be present as "background" compounds at levels associated with less than 10^{-5} cancer risk and analytical difficulties may also preclude analyzing some TO-15 analytes at lower risk levels. Achieving detections at the 10^{-5} risk level will adequately support risk evaluations that may be used to decide on further actions. Similarly, achieving detection limits equivalent to 0.1 HQ concentrations will adequately support evaluation of non-carcinogenic chemicals.

In the second part of this Appendix, the indoor air screening levels are used to derive the subslab screening levels. The subslab screening levels are calculated by applying an attenuation factor to represent the ratio between indoor air and subslab vapors.
The goal of subslab sampling is to select buildings for air sampling that might have cancer risks greater than 10^{-4} or Hazard Indices greater than 1. Setting the subslab screening levels on the basis of 10^{-5} cancer risk and 0.1 HQ, an order of magnitude lower, ensures that that all buildings that exceed these risk targets will be identified.

Derivation of Risk-Based Indoor Air Screening Levels

The risk-based screening levels developed for this memo were based on an assumption of commercial/industrial worker exposure, based on the use of the buildings, and do not address residential properties with children present. The risk equations on which these levels are based are:

$$PRG_{c-air} = \frac{TCR * BW * AT_c}{CSF_i * CF * IR * EF * ED}$$

$$PRG_{nc-air} = \frac{THQ * BW * AT_{nc} * RfD_i}{CF * IR * EF * ED}$$

where $PRG_{c\text{-}air}$ = preliminary remedial goal based on meeting target cancer risk, μg/m^3,
$PRG_{nc\text{-}air}$ = preliminary remedial goal based on meeting target hazard quotient, μg/m^3,

TCR = target cancer risk, 10^{-5}, unitless,
THQ = target hazard quotient, 0.1, unitless,

CSF_i = inhalation cancer slope factor, (mg/kg/day)$^{-1}$,
RfD_i = inhalation Reference Dose, mg/kg/day,

AT_c = lifetime averaging time, 70 years*365 days/yr = 25,550 days,
AT_{nc} = work life averaging time, 25 years*365 days/yr = 9,125 days,
BW = body weight, 70 kg,
CF = conversion factor, 0.001 mg/μg,
IR = inhalation rate, 15.2 m^3/day,
EF = exposure frequency, 250 days/year,
ED = exposure duration, 25 years.

Indoor air PRGs are calculated for carcinogens at a Target Risk level of 10^{-5} and for a Target Hazard Quotient of 0.1.

The inhalation Reference Doses and cancer slope factors are taken from the Integrated Risk Information System (IRIS) database (USEPA, 2006) and the USEPA Region 9 PRG table (USEPA, 2004).

The body weight (BW) is assumed to be 70 kg (USEPA, 1991). Slightly higher values are available (USEPA, 1997), but the difference is minimal and 70 kg is somewhat more protective.

The conversion factor of 0.001 mg/μg is used to convert micrograms to milligrams in the equations.

The Exposure Factors Handbook recommends an inhalation rate (IR) of 15.2 m^3/day for adult males involved in long-term exposures (USEPA, 1997). A slightly lower inhalation rate is recommended for females, which would be less protective and is therefore not used.

The lifetime (LT) is assumed to be 70 years or 25,550 days (USEPA, 1991). While actual lifetime expectancy is somewhat higher (USEPA, 1997), cancer slope factors are calculated based on a 70 year life expectancy. Use of this older value was therefore considered appropriate.

The exposure frequency (EF) of 250 days/year is selected on the basis of workers being assumed to work 5 days a week for 50 weeks per year (USEPA, 1991). This value is likely somewhat conservative since it assumes the worker has only a two week vacation with no holidays.

The exposure duration (ED) of 25 years represents the 95th percentile of the time a worker is likely to work at a single location (USEPA, 1991).

Toxicological Issues

Trichloroethene

The first of the toxicological issues is the current uncertainty associated with the cancer slope factor to be used for trichloroethene (TCE). Two cancer slope factors have been used to estimate cancer risks due to TCE: 1) a factor that has been generated by the California EPA (CALEPA, 200) and 2) a proposed slope factor that has not been fully reviewed or incorporated into IRIS. Using EPA's risk hierarchy (USEPA, 2003), the CALEPA slope factor can be considered a Tier 3 value, as it has been peer reviewed and is publicly documented. The U.S. EPA has prepared an assessment of TCE toxicity proposing a range of cancer slope factors with the highest being recommended for instances where children and other sensitive subpopulations may be present (USEPA, 2001). In addition to generating significant review comment, several EPA Regions and state environmental agencies are either not using these values or using them only in evaluating potential risks at sites, but not in setting cleanup levels. This proposed slope factor does not fall neatly within the toxicity hierarchy since it has been referred to the National Academy of Sciences for further review rather than being incorporated into IRIS, but is still worthy of consideration. Current USEPA Region 7 policy allows risk to be assessed using both the CALEPA slope factor and the proposed factor. Since the proposed slope factor has not yet been confirmed, decisions on air sampling in buildings as a result of this study will be based on comparison to the CALEPA-based screening levels.

> Several cancer slope factors have been proposed for TCE with the highest inhalation slope factor increasing risk estimates by a factor of 60. This upper bound slope factor is based on an epidemiological study that examined cancer rates in a 75-town area in New Jersey. For homes where the MCL was exceeded in this study, the average concentration was 23 μg/L with a maximum of 67 μg/L. Female residents had increased instances of leukemia and non-Hodgkin's lymphoma.
>
> There are, however, a number of questions with respect to this study. One problem is that the increased cancer rates may be statistical anomalies. When two groups (a control group and a test group) are compared to see if an effect is occurring in the test group, the statistical tests are normally set up to determine that there is an effect if the difference has less than a 5 percent chance of being due to random variation rather than a true difference. But when two groups are

compared for a number of variables (such as 20-30 types of cancer in total, male, and female populations), the 5 percent cutoff applied to 60-90 comparisons implies that some of these comparisons will appear to be statistically significant. Other studies have been done which have not documented similar increases in leukemia or non-Hodgkins lymphoma. Thus, there is a question as to whether these increased cancer incidences are truly significant.

Also, residents in the study were exposed to other contaminants in addition to TCE that may have contributed to cancer risks. There are also difficulties with the use of the average concentration based on measurements made during a limited time period; these may not be adequately indicative of the long-term concentration exposures of the residents.

Chloroform

Chloroform is unusual among the carcinogens in that it is not considered carcinogenic at levels that do not also have a non-carcinogenic effect. Most of the carcinogens listed in IRIS are assumed in the one-hit model used to have effects at any level. Chloroform is, however, considered not likely to be carcinogenic to humans by any route of exposure under exposure conditions that do not cause cytotoxicity and cell regeneration. This weight-of-evidence conclusion presented in IRIS is based on: 1) observations in animals exposed by both oral and inhalation pathways which indicate that sustained or repeated cytotoxicity with secondary regenerative hyperplasia precedes, and is probably required to induce, hepatic and renal neoplasia; 2) there are no epidemiological data directly indicating carcinogenicity of chloroform. Genotoxicity data on chloroform supports a conclusion that chloroform is not strongly mutagenic, and thus that genotoxicity is not likely to be the predominant mode of action underlying the carcinogenic potential of chloroform. Since the carcinogenic screening levels calculated using the slope factor given for chloroform are less than the screening level based on non-cancer effects, which include enzymatic evidence of cytotoxicity, the air level associated for 10^{-5} and even 10^{-4} cancer risks using risk equation above fall below levels that would result in cytotoxicity and are therefore not valid. The chloroform screening level is therefore set on the basis of a 0.1 HQ rather than cancer risk.

Derivation of Subslab Screening Levels

Levels of vapors migrating up through the soil concentrate in the area immediately under the building slab prior to migrating into indoor air. Subslab screening levels were calculated using an attenuation factor of 0.1 to represent the ratio of the indoor air concentration to the subslab concentration. The subslab screening levels were calculated using the equation:

$$SSL = \frac{PRG_{air}}{ATT}$$

where SSL = subslab screening level, $\mu g/m^3$,

PRG_{air} = preliminary remedial goal based on meeting target cancer risk or HQ, $\mu g/m^3$,
ATT = attenuation factor, unitless.

SSLs were determined based on 10^{-5} cancer risk or a hazard quotient of 0.1 for non-carcinogens and an attenuation factor *ATT* of 0.1. The attenuation factor is recommended in the Subsurface Vapor Intrusion Guidance (USEPA, 2002). This value is relatively conservative, and higher attenuation factors are reportedly being considered. If a new value is recommended and gains acceptance in the future, the subslab screening levels may be adjusted for the new factor.

Subslab screening levels associated with a cancer risk of 10^{-5} or an HQ of 0.1 are presented as the screening values for this vapor intrusion study. It should be noted that many of the TO-15 analytes have both slope factors and Reference Doses, reflecting that these chemicals show both carcinogenicity and non-cancer toxicity. Screening levels have been calculated for these chemicals on the basis of both cancer and non-cancer health effects. The final screening level for each of these chemicals is selected to be the lower of the two screening levels calculated on the basis of cancer and non-cancer health effects.

*** * * * ***

References

CALEPA, 2006. California Environmental Protection Agency. Toxicity Criteria Database. Office of Environmental Health Hazard Assessment. At http://www.oehha.ca.gov/risk/ChemicalDB/index.asp.

USEPA, 1991. United States Environmental Protection Agency. Human Health Evaluation Manual, Supplemental Guidance: "Standard Default Exposure Factors". OSWER Directive 9285.6-03.

USEPA, 1997. United States Environmental Protection Agency. Exposure Factors Handbook, Volume I: General Factors. EPA/600/P-95/002Fa, August 1997.

USEPA, 2001. United States Environmental Protection Agency. Trichloroethylene Health Risk Assessment: Synthesis and Characterization. EPA/600/P-01/002A, external review draft, August 2001.

USEPA, 2002. United States Environmental Protection Agency. Draft Guidance for Evaluating the Vapor Intrusion to Indoor Air Pathway from Groundwater and Soils (Subsurface Vapor Intrusion Guidance) EPA530-D-02-004, November 2002.

USEPA, 2003. United States Environmental Protection Agency. Human Health Toxicity Values in Superfund Risk Assessments. OSWER Directive 9285.7-53.

USEPA, 2004. United States Environmental Protection Agency. Region 9 Preliminary Remediation Goal Table. At http://www.epa.gov/Region9/waste/sfund/prg/index.html.

USEPA, 2006. United States Environmental Protection Agency. Integrated Risk Information System. At http://www.epa.gov/iris.

TABLE B-1
Risk-Based Screening Levels for TO-15 Chemicals
Vapor Intrusion Studies
Former Schilling Air Force Base

				INDOOR AIR SCREENING LEVELS		SUBSLAB SCREENING LEVELS	
SFi 1/(mg/kg-d)	RfDi (mg/kg-d)	CAS No.	Analyte	1E-5 Risk (ug/m^3)	0.1 HQ (ug/m^3)	1E-5 Risk (ug/m^3)	0.1 HQ (ug/m^3)
	9.0E-01	67-64-1	Acetone	-	605	-	**6051**
2.7E-02	8.6E-03	71-43-2	Benzene	7.0	6	70	**58**
6.2E-02	2.0E-02	75-27-4	Bromodichloromethane	3.0	13	**30**	134
3.9E-03	2.0E-02	75-25-2	Bromoform (tribromomethane)	49	13	489	**134**
	1.4E-03	74-83-9	Bromomethane (methyl bromide)	-	1.0	-	**10**
	1.4E+00	78-93-3	Butanone, 2- (MEK)	-	941	-	**9413**
	2.0E-01	75-15-0	Carbon disulfide	-	134	-	**1345**
5.3E-02	7.0E-04	56-23-5	Carbon tetrachloride	3.6	0.47	36	**4.7**
	1.7E-02	108-90-7	Chlorobenzene	-	11	-	**114**
2.9E-03	2.9E+00	75-00-3	Chloroethane	65	1921	**649**	19211
8.1E-02	1.4E-02	67-66-3	Chloroform	*2.3*	9.4	*23*	**94**
	2.6E-02	74-87-3	Chloromethane (methyl chloride)	-	17	-	**175**
8.4E-02	2.0E-02	124-48-1	Dibromochloromethane	2.2	13	**22**	134
2.0E+00	2.6E-03	106-93-4	Dibromoethane, 1,2- (EDB)	0.094	1.7	**0.94**	17
	5.7E-02	95-50-1	Dichlorobenzene, 1,2-	-	38	-	**384**
	3.0E-02	541-73-1	Dichlorobenzene, 1,3-	-	20	-	**202**
2.2E-02	2.3E-01	106-46-7	Dichlorobenzene, 1,4-	8.6	155	**86**	1546
	1.4E-01	75-34-3	Dichloroethane, 1,1-	-	96	-	**961**
9.1E-02	1.4E-03	107-06-2	Dichloroethane, 1,2- (EDC)	2.1	0.9	21	**9**
	5.7E-02	75-35-4	Dichloroethylene, 1,1-	-	38	-	**383**
	1.0E-02	156-59-2	Dichloroethylene, cis-1,2-	-	6.7	-	**67**
	2.0E-02	156-60-5	Dichloroethylene, trans-1,2-	-	13	-	**134**
6.8E-02	1.1E-03	78-87-5	Dichloropropane, 1,2-	2.8	0.77	28	**8**
1.4E-02	5.7E-03	542-75-6	Dichloropropene, 1,3-	13	3.84	134	**38**
	2.9E-01	100-41-4	Ethylbenzene	-	195	-	**1950**
NA	NA	591-78-6	Hexanone, 2- (MBK)	-	-	-	-
NA	NA	67-63-0	Isopropyl alcohol (2-propanol)	-	-	-	-
9.1E-04	8.6E-01	1634-04-4	Methyl tertbutyl ether (MTBE)	207	576	**2069**	5762
	8.6E-01	108-10-1	Methyl-2-pentanone, 4- (MIBK)	-	578	-	**5782**
1.6E-03	8.6E-01	75-09-2	Methylene chloride	114	576	**1144**	5763
	2.9E-01	100-42-5	Styrene	-	195	-	**1950**
2.0E-01	6.0E-02	79-34-5	Tetrachloroethane, 1,1,2,2-	0.94	40	**9.4**	403
2.1E-02	1.0E-02	127-18-4	Tetrachloroethylene (PCE)	9.0	6.7	90	**67**
	1.1E-01	108-88-3	Toluene	-	74	-	**740**
	6.3E-01	71-55-6	Trichloroethane, 1,1,1-	-	424	-	**4236**
5.6E-02	4.0E-03	79-00-5	Trichloroethane, 1,1,2-	3.4	2.7	34	**27**
7.0E-03	1.7E-01	79-01-6	Trichloroethene (TCE) (CAL-EPA)	27	114	**269**	1143
4.0E-01	*1.0E-02*	*79-01-6*	*Trichloroethene (TCE) (NCEA)*	*0.47*	*6.7*	*4.7*	*67*
	2.0E-01	75-69-4	Trichlorofluoromethane (Freon 11)	-	134	-	**1345**
NA	NA	76-13-1	Trichlorotrifluoroethane (Freon 113)	-	-	-	-
1.6E-02	2.9E-02	75-01-4	Vinyl chloride (adult exposure only)	12	19	**118**	192
	2.9E-02	1330-20-7	Xylenes	-	19	-	**195**

CSF_i = inhalation slope factor
RfD_i = inhalation Reference Dose
CAS No. = Chemical Abstracts Service chemical identification number
mg/kg/d = milligrams chemical taken in per kilogram body weight per day
ug/m^3 = mmicrograms of chemical per cubic meter of air
CAL-EPA = California Environmental Protection Agency
NCEA = National Center for Exposure Assessment
NA= value not available
Bold values are recommended screening levels based on 1E-5 cancer risk or hazard quotient (HQ) of 0.1 for subslab samples.
For chloroform, not carcinogenic unless concentrations exceed HQ of 1: therefore screened against 0.1 HQ.
For trichloroethene, screening values are calculated using both the CAL-EPA and 2001 USEPA proposed slope factors.

Appendix C

Standard Operating Procedures

KDHE Standard Operating Procedure BER-33
Procedures for Sampling and Analysis of Indoor Air Samples

BUREAU OF ENVIRONMENTAL REMEDIATION

STANDARD OPERATING PROCEDURE BER-33

PROCEDURES FOR SAMPLING AND ANALYSIS OF INDOOR AIR SAMPLES

Revisor:_____ Date of Revision:_____

Remedial Section Chief:_____ Date:_____

Tank Section Chief:_____ Date:_____

ARS Section Chief:_____ Date:_____

Bureau QA Representative: _____ Date: _____

Bureau Manager:_____ Date:_____

Revisor:_____ Date of Revision:_____

Remedial Section Chief:_____ Date:_____

Tank Section Chief:_____ Date:_____

ARS Section Chief:_____ Date:_____

Bureau QA Representative: _____ Date: _____

Bureau Manager:_____ Date:_____

Revisor:_____ Date of Revision:_____

Remedial Section Chief:_____ Date:_____

Tank Section Chief:_____ Date:_____

ARS Section Chief:_____ Date:_____

Bureau QA Representative: _____ Date: _____

Bureau Manager:_____ Date:_____

TABLE OF CONTENTS

1. INTRODUCTION 4

2. SAMPLING EQUIPMENT 4

3. BACKGROUND REVIEW 4

4. PRELIMINARY SCREENING 5

5. SAMPLING PROCEDURES 5

6. SAMPLING ANALYSIS 6

ATTACHMENT ONE - FIELD DATA AIR SAMPLING FORM

ATTACHMENT TWO - SAMPLING INSTRUCTIONS FOR CANISTERS WITH PNEUMATIC FLOW CONTROLLERS

1. INTRODUCTION

This procedure describes field protocols for sampling and analytical methods to determine the presence of VOCs in ambient, indoor, or workplace atmospheres. This method establishes standard operating procedures for the collection of air samples in passivated (inert) stainless-steel canisters.

2. SAMPLING EQUIPMENT

Indoor air samples will be collected in specially prepared six liter stainless-steel spheres. The laboratory will provide either SUMMA canisters or SilcoCans for the sampling. Air flow into the canister is regulated by a sampling valve (fixed orifice) or a pneumatic flow controller, attached to an in-line particulate filter. The sampling valve is typically used for short duration grab samples; however, the valve can be set for longer duration sampling. A flow controller can be preset to regulate flow for sample collection times of 1-hour, 3-hours, 8-hours, 12-hours or 24 hours. Larger canisters are available for sampling periods in excess of 24-hours. The desired sampling rate is pre-set either by the canister manufacturer or the laboratory. Canisters will be cleaned and certified by the laboratory as per EPA Method TO-14A or TO-15 guidelines.

A pressure/vacuum gauge is utilized to measure and record the initial canister vacuum pressure. A post sampling vacuum reading is taken when sampling is performed with a flow controller. This item is not typically supplied by the laboratory but is available upon request. The canister pressure should be approximately 22 - 30" of Hg. If the initial pressure is less than 20" of Hg, the canister should be rejected and returned to the laboratory.

Stainless-steel or Teflon tubing can be attached to the inline filter to obtain samples from the breathing zone, sub-slab or a remote location. The inlet manifold is placed in the breathing zone at approximately three to five feet above grade. The laboratory will supply this material upon request.

3. BACKGROUND REVIEW

An adequate background review must be conducted to obtain information on each structure from which a sample is collected. Conduct a survey of each structure to ascertain basement, crawl space or slab on-grade building configuration. Determine if sumps, wells, or cisterns are associated with each structure. Evaluate the condition of the floors and walls, furnace use (fuel type) and building ventilation. These features may act as conduits that will facilitate the migration of VOCs from the soil and/or groundwater plume. An attached garage may store products that can contribute to contaminant impacts.

Interviews should be conducted to assess the use of potential contaminants, frequency of use, storage, as well as methods of handling and disposal. Additional information that is vital to adequately evaluate potential health risks include the following: the length of occupant residency; the ages of the adults and children that live in the structure; if the occupants smoke and how often. Any hobbies that use paints or solvents should be noted. The data referenced in this section should be entered on the Field Data Air Sampling Form in Attachment One.

4. PRELIMINARY SCREENING

Primary sampling areas will be in basements and/or the lowest potential living level, near sumps or other potential source areas. Preliminary screening of the sampling area may be conducted through use of photoionization detectors (PID) or colorimetric tubes. Screening, and subsequent sampling, will be conducted in the center of the room away from obstructions in the breathing zone, near potential sources, basements and crawl spaces. PIDs will be checked and calibrated according to manufacturers directions. Additional preliminary factors to be documented will include indoor and outdoor temperature, wind speed/ direction, and barometric pressure.

Preliminary screening and subsequent sampling can also be conducted in buildings or residences outside the area of concern to evaluate background levels of various constituents that may impact data interpretation. The data referenced in this section should be entered on the Field Data Air Sampling Form in Attachment One.

5. SAMPLING PROCEDURES

Laboratory prepared sampling apparatus configurations may vary. Specific instructions and/or diagrams for system assembly, if any, should be obtained from the laboratory suppling the canister(s). Canisters should not be placed in the kitchen, in areas of high humidity (bathroom/laundry room), near windows, or heat registers. Record the local outdoor temperature, relative humidity and barometric pressure on the Field Data Air Sampling Form in Attachment One.

Sampling equipment apparatus may be assembled as follows: connect the flow controller, with attached in-line filter and vacuum/ pressure gauge, to the canister utilizing a compression fitting; connect a sampling tube(if used) to the sample inlet on the filter; place the canister in the predetermined location and begin sampling by turning the canister valve counter-clockwise one full turn or as specified; after sampling is complete, record the canister vacuum pressure and close the canister valve. Do not over-tighten the valves or compression fittings.

The final canister pressure should be less than atmospheric to ensure that a constant flow rate was used for the entire sampling period. Attach an identification tag that indicates the canister serial

number, sample number, location, and date to the canister for transport to the laboratory. The canisters will be shipped under proper chain-of-custody protocol. Canisters must be returned to the laboratory from which they were rented for analysis. A copy of sampling instructions for canisters with pneumatic flow controllers is in Attachment Two.

6. SAMPLE ANALYSIS

The canisters provide storage stability for many VOCs for a period of up to 30 days. Collected samples will be submitted for laboratory analysis by either EPA Method TO-14A (EPA, January, 1997) or EPA Method TO-15 (EPA, January, 1997). EPA Method TO-14A is the more recognized method for analysis of unknown trace VOCs and is more sensitive. This method can analyze up to 41 of 187 hazardous air pollutants listed in the Title III Clean Air Act Amendment (CAAA). EPA Method TO-14A uses single or multiple detectors which are generally less desirable than the mass spectrometry detector utilized by EPA Method TO-15.

The mass spectrometry utilized for EPA Method TO-15 is a more scientifically defensible detector scheme that has a more definitive identification technique for VOC analysis than TO-14A. Therefore, EPA Method TO-15 can be applied with a higher confidence which reduces uncertainty in risk assessments that evaluate VOCs. A larger number of Title III CAAA compounds can be analyzed (97 of 187) by EPA Method TO-15. Detection limits for the various analytes, with either EPA method, range from 0.2 ppbv - 25 ppbv.

A relatively limited number of laboratories conduct air sampling analysis. The referenced lab methods can be located on the world wide web at the following addresses: www.epa.gov/ttnamtil/files/ambient/airtox/to-14a.pdf or www.epa.gov/ttnamtil/files/ambient/airtox/to-15.pdf.

References:

Method TO-14A - Determination of Volatile Organic Compounds (VOCs) in Ambient Air Using Specially Prepared Canisters with Subsequent Analysis by Gas Chromatography, EPA, January, 1997

Method TO-15 - Determination of Volatile Organic Compounds (VOCs) in Air Collected in Specially-Prepared Canisters and Analyzed by Gas Chromatography/Mass Spectrometry, EPA, January, 1997

ATTACHMENT ONE

FIELD DATA AIR SAMPLING FORM

FIELD DATA AIR SAMPLING FORM

Site Name:_____

Sample Identification:_____/_____ Date Sampled:_____

Sample Location(s):_____
_____

Sampler:_____ Canister Serial #:_____/_____

Environmental Conditions

Outdoor Temperature:_____ Barometric Pressure:_____ Wind Speed/Direction:_____

Relative Humidity:_____ Comments:_____

Preliminary Screening

Instrumentation:_____ Calibration Date:_____ Time:_____ am/pm

Field Reading(s):_____(ppm)/_____(ppm)/_____(ppm)/_____(ppm)

Location(s):_____
_____
_____
_____

Air Sampling

	Time	Pressure	Controller Flow
Start:	_____am/pm	_____"Hg	_____
Stop:	_____am/pm	_____"Hg	_____

Start: _____am/pm _____"Hg _____

Stop: _____am/pm _____"Hg _____

FIELD DATA AIR SAMPLING FORM

Residential Questionnaire

Tenant's Name(s):_____ Age:_____ Tenure:_____

_____ _____ _____

_____ _____ _____

_____ _____ _____

_____ _____ _____

Address:_____

Smoker(s): Y/N Product (Cigars, Pipe, Cigarettes):_____ Number Smoked/Day:_____

Basement/Crawl Space: Y/N Ventilated: Y/N Living Quarters: Y/N

Basement Activities:_____

Private Well: Y/N Sump: Y/N Cistern: Y/N In Use/Plugged: Y/N

Recent Remodeling: Y/N Activities (painting, new carpet, new cabinets): Y/N

_____

VOC sources (hobbies, paints, solvents, gasoline, etc.):_____

_____

Cleaning Products and Storage:_____

Attached Garage: Y/N Garage Storage (cars, lawn mover, etc.):_____

Furnace Type (Oil, Natural Gas, Propane):_____ Furnace Intake: Inside/Outside

Additional Heating Sources (space heater, etc):_____ Fuel Type:_____

Comments: _____

_____

_____

_____

_____

ATTACHMENT TWO

SAMPLING INSTRUCTIONS FOR CANISTERS WITH PNEUMATIC FLOW CONTROLLERS

Sampling Instructions for Canisters With Pneumatic Flow Controllers

1. Inspect your canister shipment upon arrival. Compare the contents with the packing slip and notify the lab of any discrepancy or damage

2. Familiarize yourself with this diagram and the equipment that you received. The flow controller will be set for the appropriate sampling rate in the laboratory and should not require adjustment.

3. Remove the brass caps from the flow controller and canister. Connect the flow controller to the canister by inserting the "canister connection" into the "canister inlet" and hand tighten the swagelock nut being careful not to cross the threads. Using two open end wrenches (1/2" & 9/16") tighten the nut no more than 1/8 turn past finger tight. DO NOT use adjustable wrenches or pliers.

4. The fittings are swagelock compression fittings. Do not use teflon tape or other sealants, they are not necessary. DO NOT over-tighten any connection. Over-tightening causes leaks, not fixes them.

5. The canister and controller are now ready for ambient air sampling. If you intend to sample a remote location or source, you will need to attach a sampling line. This should be 1/4" O.D. tubing of virgin Teflon or cleaned stainless steel.

6. If arranged with your canister order, the lab will provide a swagelock nut and set of nylon ferrules for connecting line. Slide the nut, the back ferrule, then the front ferrule onto the tubing. Insert the tubing into the sample inlet and slide the ferrules into the fitting. Secure the nut being careful not to cross the threads. When using nylon ferrules, a snug finger tight should be sufficient for a leak free connection.

7. To begin sampling, simply open the canister valve by turning clockwise. One full turn is sufficient. Note the vacuum gauge reading. The vacuum gauge reading should be near the barometric pressure.

8. You can watch the decline in the vacuum to gauge the sampling rate. A one hour sample should drop in vacuum at a rate of 0.5" Hg per minute (i.e. 30"/60 min). Remember this is a rough estimate. The sampling rate is normally set in the laboratory. Occasionally the controller will lose calibration in shipment. If necessary contact the lab for assistance.

9. After sampling is complete, close the canister valve by turning clockwise until finger tight. DO NOT over-tighten as this WILL damage a very expensive valve.

10. Disassemble the components in reverse order of the above assembly instructions. Return all components to the original shipping containers and package them as received

11. Verify that all parts are packed for return by referencing the packing slip. The project will be charged for all missing or damaged components.

12. Complete a Chain-of-Custody Record and return the sample to the laboratory for analyses.

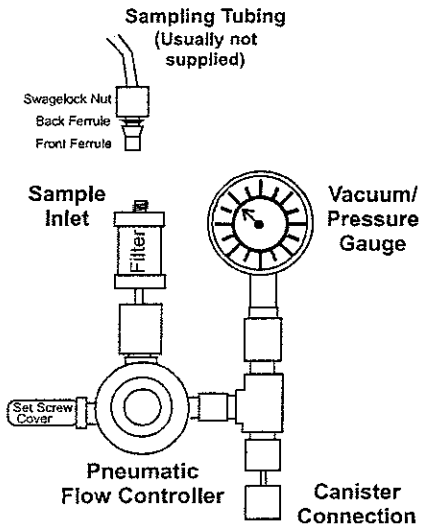

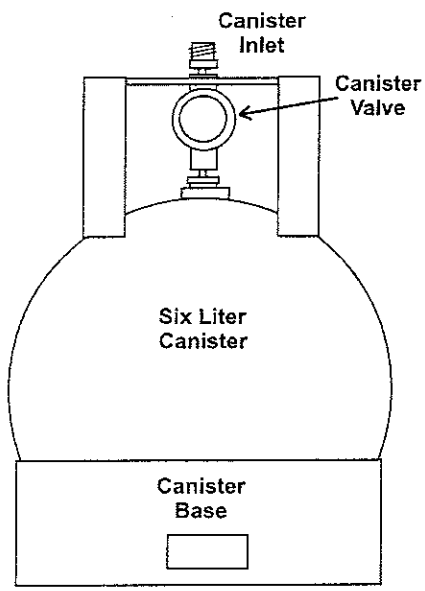

Teflon will sometimes have very low level freon contamination

Indoor Air Quality Building Survey

Date: _____

Address: _____

_____

Residential Contact: _____

Phone: Home: ( ) _____ - _____ Work: ( ) _____ - _____

List of Current Occupants/Occupation:

Age (If under 18)	Sex (M/F)	Occupation

Building Construction Characteristics:

What type of building do you have? (Circle appropriate response)

Single Family	Multiple Family	School	Commercial
Ranch	2-Family		
Raised Ranch	Duplex		
Cape	Apartment House		
Colonial	#of units_____		
Split Level	Condominium		
Mobile Home	#of units_____		
Other_____	Other_____		

Address:_____
Date:_____

Sources of Chemical Contaminants:

Which of these items are present in the building? (Check all that apply)

Potential VOC Source	Location of Source	Used 48 hours prior to sampling (Yes/No/NA)	Use During Sampling (Yes/No/NA)
Paints or paint thinners			
Gas-powered equipment			
Gasoline storage cans			
Cleaning solvents			
Air fresheners			
Oven cleaners			
Carpet/upholstery cleaners			
Hairspray			
Nail polish/polish remover			
Bathroom cleaner			
Appliance cleaner			
Furniture/floor polish			
Moth balls			
Fuel tank			
Wood Stove			
Fireplace			
Perfume/colognes			
Hobby supplies (e g., solvents, paints, lacquers, glues, photographic darkroom chemicals)			
Scented trees, wreaths, potpourri,etc			
Other			
Other			

Drinking Water Usage During Sampling(check all that apply)

Showering_____ Cooking_____ Dishwashing_____ Laundry_____
Other:_____

USEPA Standard Operating Procedure for Installation of Sub-Slab Soil Vapor Probes and Sampling Using EPA Method TO-15 to Support Vapor Intrusion Investigations

Draft

Standard Operating Procedure (SOP) for Installation of Sub-Slab Vapor Probes and Sampling Using EPA Method TO-15 to Support Vapor Intrusion Investigations

Dominic DiGiulio, Ph.D.
U.S. Environmental Protection Agency
Office of Research and Development
National Risk Management Research Laboratory
Ground-Water and Ecosystem Restoration Division
Ada, Oklahoma

phone: 580-436-8605
e-mail: digiulio.dominic@epa.gov

Background

Vapor intrusion is defined as vapor phase migration of volatile organic and/or inorganic compounds into occupied buildings from underlying contaminated ground water and/or soil. Until recently, this transport pathway was not routinely considered in RCRA, CERCLA, or UST investigations. Therefore the number of buildings or homes where vapor intrusion has occurred or is occurring is undefined. However, considering the vast number of current and former industrial, commercial, and waste processing facilities in the United States capable of causing volatile organic or inorganic ground-water or soil contamination, contaminant exposure via vapor intrusion could pose a significant risk to the public. Also, consideration of this transport pathway may necessitate review of remedial decisions at RCRA and CERCLA sites as well as implementation of risk-reduction technologies at Brownsfield sites where future development and subsequent potential exposure may occur. EPA's Office of Solid Waste and Emergency Response (OSWER) recently (2002) developed guidance to facilitate assessment of vapor intrusion at sites regulated by RCRA and CERCLA where halogenated organic compounds constitute the bulk of risk to human health. EPA's Office of Underground Storage Tanks (OUST) is considering modifying this guidance to include underground storage tank sites where petroleum compounds primarily determine risk and biodegradation in subsurface media may be a dominant fate process.

The OSWER guidance recommends indoor air and sub-slab gas sampling in potentially affected buildings at sites containing elevated levels of soil-gas and ground-water contamination. To support the guidance and improve site-characterization and data interpretation methods to assess vapor intrusion, EPA's Office or Research and Development is developing a protocol for sub-slab gas sampling. When used in conjunction with indoor air, outdoor air, and soil gas and/or ground-water sampling, sub-slab gas sampling can be used to differentiate indoor and outdoor sources of volatile organic and/or inorganic compounds from compounds emanating from contaminated subsurface media. This information can then be used to assess the need for sub-slab depressurization or other risk-reduction technologies to reduce present or potential future indoor air contamination due to vapor intrusion.

Sub-Slab Vapor Probe Construction and Installation

1. Prior to drilling holes in a foundation or slab, contact local utility companies to identify and mark utilities coming into the building from the outside (e.g., gas, water, sewer, refrigerant, and electrical lines). Consult with a local electrician and plumber to identify the location of utilities inside the building.

2. Prior to fabrication of sub-slab vapor probes, drill a pilot hole to assess the thickness of a slab. As illustrated in **Figure 1**, use a rotary hammer drill to create a "shallow" (e.g., 2.5 cm or 1 in) "outer" hole (e.g., 2.2 cm or 7/8 in diameter) that partially penetrates the slab. Use a small portable vacuum cleaner to remove cuttings from the hole if penetration has not occurred. Removal of cuttings in this manner in a competent slab will not compromise sampling because of lack of pneumatic communication between sub-slab material and the source of vacuum.

3. Then use the rotary hammer drill to create a smaller diameter "inner" hole (e.g., 0.8 cm or 5/16 in) through the remainder of the slab and some depth (e.g., 7 to 8 cm or 3 in) into sub-slab material. **Figure 2** illustrates the appearance of "inner" and "outer" holes. Drilling into sub-slab material will create an open cavity which will prevent obstruction of

probes during sampling by small pieces of gravel.

4. The basic design of a sub-slab vapor probe is illustrated in **Figure 3**. Once the thickness of the slab is known, tubing should be cut to ensure that probes “float” in the slab to avoid obstruction of the probe with sub-slab material. Construct sub-slab vapor probes from small diameter (e.g., 0.64 cm or 1/4 in OD x 0.46 cm or 0.18 in ID) chromatography grade 316 stainless steel tubing and stainless-steel compression to thread fittings (e.g., 0.64 cm or 1/4 in OD x 0.32 cm or 1/8 in NPT Swagelok female thread connectors) as illustrated in **Figure 4**. Use of stainless-steel materials to ensure that construction materials are not a source of VOCs.

5. Set sub-slab vapor probes in holes. As illustrated in **Figure 5**, the top of the probes should be completed flush with the slab and have recessed stainless steel or brass plugs so as not interfere with day-to-day use of buildings. Mix a quick-drying portland cement which expands upon drying (to ensure a tight seal) with water to form a slurry and inject or push into the annular space between the probe and outside of the “outer” hole. Allow cement to cure for at least 24 hours prior to sampling.

6. Install at least 3 sub-slab vapor probes in each residence. As illustrated in **Figure 6**, create a schematic identifying the location of each sub-slab probe.

Sub-Slab Sampling

1. Connect dedicated a stainless-steel fitting and tubing (e.g., 1/8 in NPT to 1/4 in tube Swagelok fitting and 30 cm or 1 ft of 1/4 in I.D. Teflon tubing to a sub-slab vapor probe as illustrated in **Figure 7**. Use of dedicated fitting and tubing will avoid cross-contamination issues.

2. Connect the Teflon tubing to 1/4" ID Masterflex (e.g., 1.4 in ID high performance Tygon LFL) tubing and a peristaltic pump and 1-L Tedlar bag as illustrated in **Figure 8**. Use of a peristaltic pump will ensure that sampled air does not circulate through a pump causing potential cross contamination and leakage.

3. Purge vapor probe by filling two dedicated 1-L Tedlar bags. The internal volume of sub-slab probes is insignificant (< 5 cm^3). A purge volume of 2 L was chosen based on the assumption of a 0.64 cm (1/4") air space beneath a slab and an affected sample diameter of 0.61 m (2 ft).

4. Use a portable landfill gas meter to analyze for O_2, CO_2 and CH_4 in Tedlar bags as illustrated in **Figure 9**.

5. Collect sub-slab vapor samples in evacuated 10% or 100% certified 1-L Summa polished canisters and dedicated particulate filters as illustrated in **Figure 10**. Check vacuum in canisters prior to sampling. Sampling will cease when canister pressure reaches atmospheric pressure. Submit canisters to a commercial laboratory for analysis by EPA Method TO-15.

6. Collect at least one duplicate sub-slab sample per building using dedicated stainless-steel tubing as illustrated in **Figure 11.**

Figure 1. Drilling through a slab

Figure 2. “inner and “outer

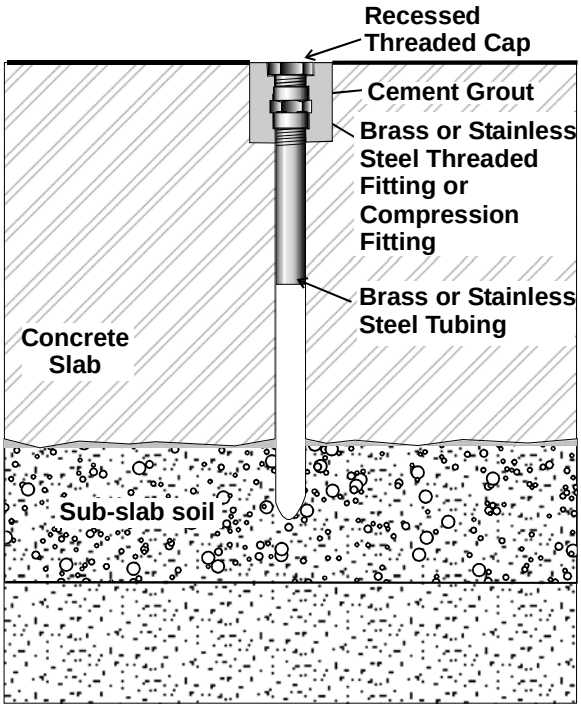

Figure 3. General schematic of sub-slab vapor probe

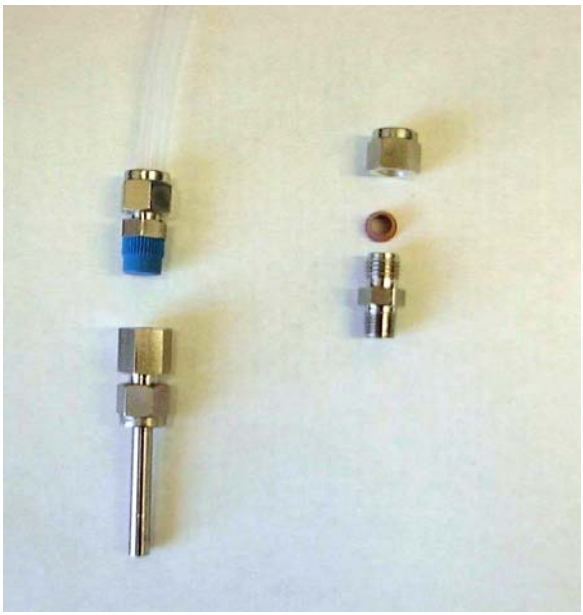

Figure 4. Stainless steel sub-slab vapor probe components

Figure 5. Competed vapor probe installation

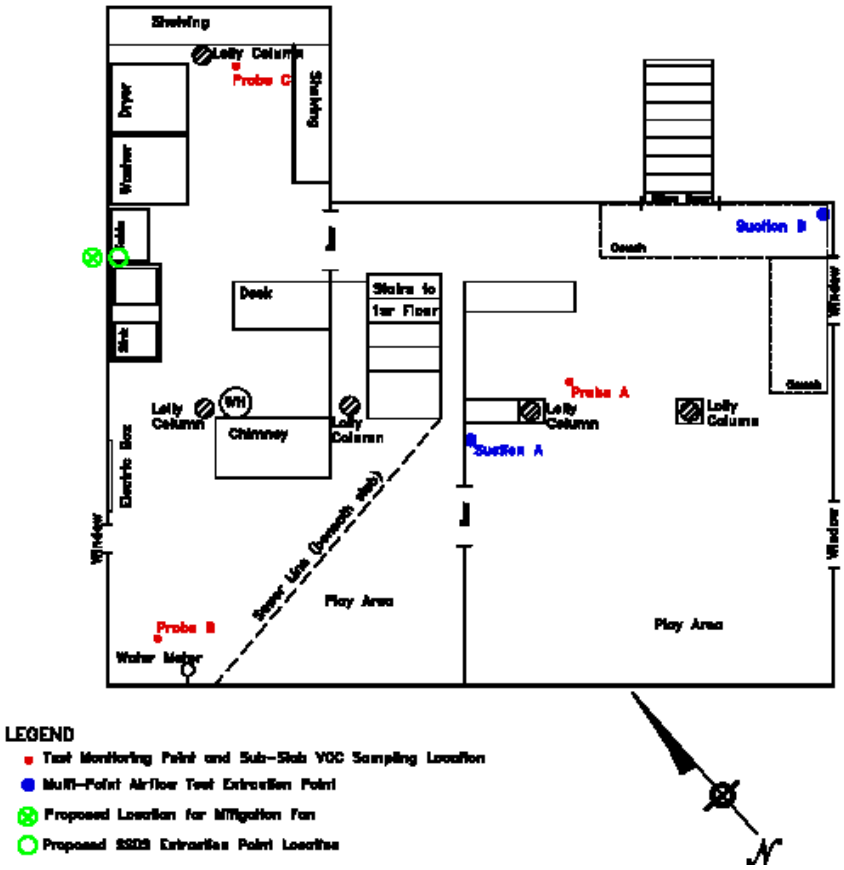

Figure 6. Schematic illustration location of vapor probes in a basement

Figure 7. Compression fitting to probe

Figure 8. Purge prior to sampling

Figure 9. Analysis of O2, CO2, and CH4

Figure 10. Sampling in 1-L evacuated canister for TO-15 analysis

Figure 11. Collection of duplicate sample

Columbia Analytical Services
Summa Canister Instructions

SUMMA CANISTER INSTRUCTIONS

Columbia Analytical Services INC.
An Employee - Owned Company

Sampling with a Summa Canister - How to take a Grab Sample

Equipment:

Summa or Silco canister – cleaned, evacuated, valve checked for leakage, and certified by CAS Air Quality Laboratory prior to shipment.

Procedure:

1. Ensure that the valve is fully closed (the green knob should be turned completely clockwise).
2. Using a 9/16" wrench, remove the brass cap above the valve on the top of the Summa canister.
3. To fully open the canister valve, turn the green knob counterclockwise until there is no resistance. This is approximately 1¼ turns. You will hear a hissing noise as the vacuum dissipates and air flows in.
4. Once the hissing noise stops, the vacuum has fully dissipated, and your sample has been collected. This takes approximately 5-10 seconds. Close the valve by turning the green knob clockwise.
5. Replace the brass cap. Tighten it with a 9/16" wrench.
6. Label the sample with the tag provided, then attach the tag to the canister with the plastic tie. Complete a chain of custody form.
7. Place the chain of custody form, along with the canister, back into the original box in which it was shipped to you.

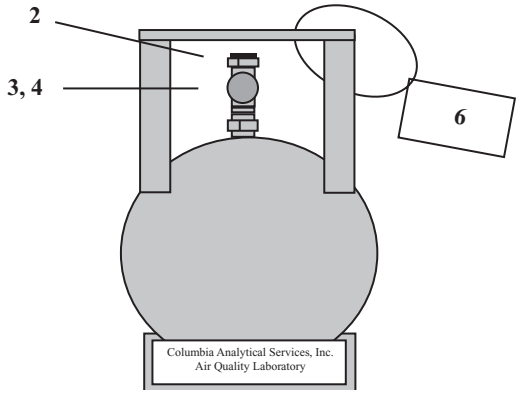

Important Notes:

- *Care must be used with the canister valves. DO NOT OVER-TIGHTEN THE VALVES.*
- *Do NOT connect to a source with positive pressure greater than 40 psi.*
- *The valve fitting is a ¼" male Swagelok fitting.*
- *Do not remove the bar code or serial number labels from the canisters.*
- *Do not make any markings directly on the canister or affix any labels.*
- *Please call the laboratory with any questions regarding proper shipping of canisters.*

Columbia Analytical Services
Air Quality Laboratory
2665 Park Center Drive, Suite D ▪ Simi Valley, California 93065
(805) 526-7161 ▪ Fax (805) 526-7270
www.CASAirlab.com

Sampling with a Summa Canister and Flow Controller-
How to take a Time Integrated Sample

Equipment:

Summa or Silco canister – cleaned, evacuated, valve checked for leakage, and certified by CAS Air Quality Laboratory prior to shipment.
Flow controller – pre-calibrated by the laboratory for your project specific requirements. *Do not adjust any of the settings or knobs on the flow controller.*

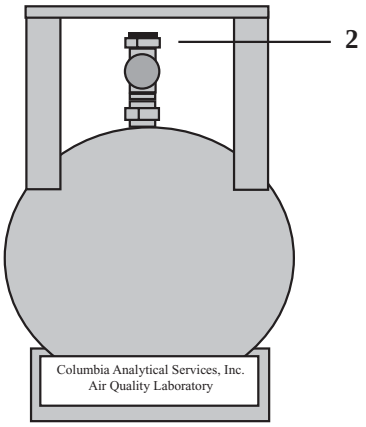

Procedure:

1. Ensure that the valve is fully closed (the green knob should be turned completely clockwise).
2. Using a 9/16” wrench, remove the brass cap from the valve on the top of the Summa canister.
3. Attach the flow controller to the valve on the top of the canister. Tighten down with your fingers first, then tighten gently with 9/16” wrench.
4. To open the canister valve, turn the green knob counterclockwise until there is no resistance. This is approximately 1¼ turns. Then turn back clockwise slightly until resistance is detected. Since the flow controller restricts the airflow, you will not hear a hissing noise as the vacuum dissipates and draws air in.
5. At the end of the sampling period, close the valve by turning the green knob clockwise. Do not over-tighten.
6. Label the sample with the tag provided, then attach the tag to the canister with the plastic tie.
7. Remove the flow controller. Wrap securely in bubble wrap.
8. Replace the brass cap on the canister valve. Tighten it with a 9/16” wrench.
9. Complete a chain of custody form. Note the flow controller bar code with the corresponding canister.
10. Place the chain of custody form, the bubble-wrapped flow controller, and the canister back into the original box in which they were shipped to you.

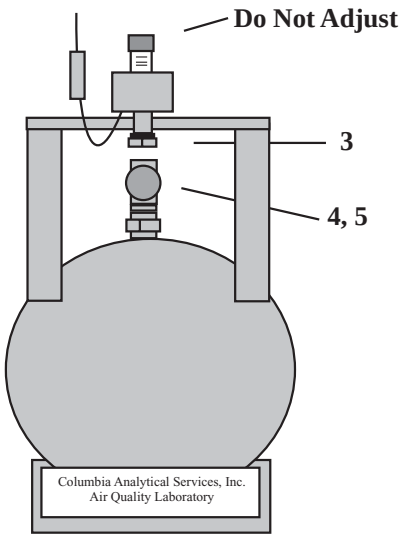

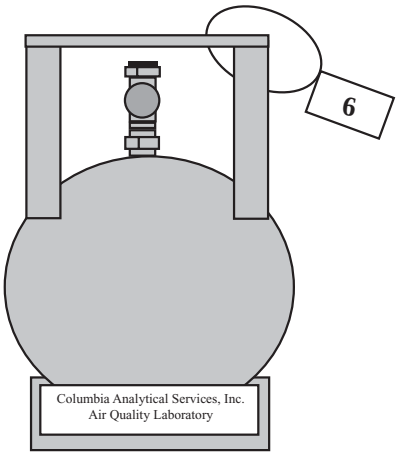

Important Notes:

- *Care must be used with the canister valves. DO NOT OVER-TIGHTEN THE VALVES.*
- *Flow controllers must be securely wrapped in bubble wrap for shipping.*
- *The valve fitting is a ¼” male Swagelok fitting.*
- *Do not remove the bar code or serial number labels from the canisters.*
- *Do not make any markings directly on the canister or affix any labels.*
- *Please call the laboratory with any questions regarding proper shipping of canisters.*