Final
Quality Assurance Project Plan
for
Vapor Intrusion Investigation
at Operable Unit - 1

Former Schilling Air Force Base
CERCLA Process Support
Salina, Kansas

August 22, 2006

Prepared for

U.S. Army Corps of Engineers
Kansas City District

Prepared by

Contract Number: W912DQ-06-D-0006
Project Number: 42244

QAPP DOCUMENT CONTROL

Number: UNCONTROLLED

Initials: _____ Date: _____

Effective Date: September 1, 2006

TABLE OF CONTENTS **Page No.**

Table of Contents ..... TC-1 to TC-6
Introduction ..... i to iv
QAPP Worksheet #1. Title and Approval Page ..... W1-1 to W1-1
QAPP Worksheet #2. QAPP Identifying Information ..... W2-1 to W2-5
QAPP Worksheet #3. Distribution List ..... W3-1 to W3-1
QAPP Worksheet #4. Project Personnel Sign-Off Sheet ..... W4-1 to W4-5
4-1 USACE-CENWK W4-1
4-2 MP W4-2
4-3 BMcD W4-3
4-4 Columbia W4-4
4-5 STL Burlington W4-5
QAPP Worksheet #5. Project Organizational Chart ..... W5-1 to W5-4
QAPP Worksheet #6. Communication Pathways ..... W6-1 to W6-3
QAPP Worksheet #7. Personnel Responsibilities and Qualifications Table ..... W7-1 to W7-2
QAPP Worksheet #8. Special Personnel Training Requirements Table ..... W8-1 to W8-2
QAPP Worksheet #9. Project Scoping Session Participants Sheet ..... W9-1 to W9-6
9-1 April 13, 2006 Scoping Meeting W9-1
9-2 April 20, 2006 Scoping Meeting W9-2
9-3 May 1, 2006 Scoping Meeting W9-3
9-4 May 11, 2006 Scoping Meeting W9-4
9-5 May 16, 2006 Scoping Meeting W9-6
QAPP Worksheet #10. Problem Definition ..... W10-1 to W10-3
QAPP Worksheet #11. Project Quality Objectives / Systematic Planning Process Statements ..... W11-1 to W11-5
QAPP Worksheet #12. Measurement Performance Criteria Table ..... W12-1 to W12-16
12-1 VOCs by TO-15 (Columbia) W12-1
12-2 VOCs by TO-15 (STL Burlington) W12-5
Discussion W12-7
QAPP Worksheet #13. Secondary Data Criteria and Limitations Table ..... W13-1 to W13-1
QAPP Worksheet #14. Summary of Project Tasks ..... W14-1 to W14-3
QAPP Worksheet #15. Reference Limits and Evaluation Table ..... W15-1 to W15-6
15-1 VOCs by TO-15 (Columbia) W15-1
15-2 VOCs by TO-15 (STL Burlington) W15-4
QAPP Worksheet #16. Project Schedule/Timeline Table ..... W16-1 to W16-2
QAPP Worksheet #17. Sampling Design and Rationale ..... W17-1 to W17-2
QAPP Worksheet #18. Sampling Locations and Methods/SOP Requirements Table ..... W18-1 to W18-2
QAPP Worksheet #19. Analytical SOP Requirements Table ..... W19-1 to W19-1
QAPP Worksheet #20. Field Quality Control Sample Summary Table ..... W20-1 to W20-1
QAPP Worksheet #21. Project Sampling SOP References Table ..... W21-1 to W21-2
QAPP Worksheet #22. Field Equipment Calibration, Maintenance, Testing, and Inspection Table ..... W22-1 to W22-1
QAPP Worksheet #23. Analytical SOP References Table ..... W23-1 to W23-2
QAPP Worksheet #24. Analytical Instrument Calibration Table ..... W24-1 to W24-2

TABLE OF CONTENTS (continued) **Page No.**

QAPP Worksheet #25. Analytical Instrument and Equipment Maintenance, Testing, and Inspection Table ..... W25-1 to W25-2
QAPP Worksheet #26. Sample Handling System ..... W26-1 to W26-1
QAPP Worksheet #27. Sample Custody Requirements ..... W27-1 to W27-1
QAPP Worksheet #28. QC Samples Table ..... W28-1 to W28-4
28-1 Sub-Slab Soil Vapor and Indoor Air analysis using TO-15 ..... W28-1
QAPP Worksheet #29. Project Documents and Records Table ..... W29-1 to W29-3
QAPP Worksheet #30. Analytical Services Table ..... W30-1 to W30-1
QAPP Worksheet #31. Planned Project Assessments Table ..... W31-1 to W31-2
QAPP Worksheet #32. Assessment Findings and Corrective Action Responses ..... W32-1 to W32-2
QAPP Worksheet #33. QA Management Reports Table ..... W33-1 to W33-2
QAPP Worksheet #34. Sampling and Analysis Verification (Step I) Process Table ..... W34-1 to W34-2
QAPP Worksheet #35. Sampling and Analysis Validation (Steps IIa and IIb) Process Table ..... W35-1 to W35-1
QAPP Worksheet #36. Sampling and Analysis Validation (Steps IIa and IIb) Summary Table ..... W36-1 to W36-4
QAPP Worksheet #37. Usability Assessment ..... W37-1 to W37-2
References ..... Ref-1 to Ref-1

LIST OF TABLES

Table No.	Title	Page No.
11-1	Analyte List	W11-5
12-1	LCS Acceptance Limits (Columbia), Volatile Organic Compounds by USEPA TO-15	W12-2

LIST OF FIGURES

Figure No.	Title	Page No.
5-1	Project Organizational Chart	W5-4
12-1	QA and Field Duplicate Sample Comparison	W12-6

LIST OF ACRONYMS AND ABBREVIATIONS

AFB	Air Force Base
AIHA	American Industrial Hygiene Association
AL	Action Limit
AOI	Area of Interest
BMcD	Burns & McDonnell Engineering Company, Inc.
CENWK	Kansas City District (USACE)
CERCLA	Comprehensive Environmental Response, Compensation, and Liability Act
cis-1, 2-DCE	cis-1, 2-Dichloroethene
COC	Chain of Custody
Columbia	Columbia Analytical Services, Inc.
CX	Center for Expertise (USACE)
DoD	Department of Defense
DQCR	Daily Quality Control Reports
DQI	Data Quality Indicator
ESI	Expanded Site Investigation
FedEx	Federal Express
Freon 11	Trichlorofluoromethane
Freon 113	Trichlorotrifluoroethane
FSM	Field Site Manager
GC/MS	Gas Chromatography/Mass Spectroscopy
HAZWOPER	Hazardous Waste Operations and Emergency Response
HTRW	Hazardous, Toxic and Radioactive Waste
ICAL	Initial Calibration
ICBM	Intercontinental Ballistic Missile
ICV	Initial Calibration Verification
IDQTF	Intergovernmental Data Quality Task Force
IDW	Investigation Derived Waste
IS	Internal Standard
J	Estimated
KDHE	Kansas Department of Health and Environment
LCS	Laboratory Control Sample
LOD	Limit of Detection
LOQ	Limit of Quantitation
MDL	Method Detection Limit
ME	Marginal Exceedence
MEK	Methyl Ethyl Ketone (2-Butanone)
MIBK	Methyl Isobutyl Ketone (4-Methyl-2-pentanone)

LIST OF ACRONYMS AND ABBREVIATIONS (continued)

MP	Malcolm Pirnie, Inc.
MPC	Measurement Performance Criteria
MS	Mass Spectroscopy
MSD	Mass Selective Detective
MTBE	Methyl tert-Butyl Ether
µg/L	micrograms per liter
NELAP	National Environmental Laboratory Accreditation Program
OU-1	Operable Unit-1
OVM	Organic Vapor Meter
PARCC	Precision, Accuracy, Reprentativeness, Comparability, and Completeness
PCE	Tetrachloroethene
Phase 1	Phase 1 of the Vapor Intrusion Investigation (Sub-Slab Soil Vapor Sampling)
Phase 2	Phase 2 of the Vapor Intrusion Investigation (Indoor Air Sampling)
PID	Photoionization Detector
POC	Point of Contact
PQO	Project Quality Objectives
PT	Performance Testing
QA	Quality Assurance
QAM	Quality Assurance Manual
QAPP	Quality Assurance Project Plan
QC	Quality Control
QCP	Quality Control Plan
QCSR	Quality Control Summary Report
QL	Quantitation Limit
QMP	Quality Management Plan
QSM	Quality Systems Manual
R	Rejected / Unusable
RAB	Restoration Advisory Board
REC	Percent Recovery
RI	Remedial Investigation
RPD	Relative Percent Difference
RRT	Relative Retention Time
%RSD	Percent Relative Standard Deviation
SAA	Salina Airport Authority
SEDD	Staged Electronic Data Deliverable
SI	Site Investigation
SIM	Selective Ion Monitoring
SOP	Standard Operating Procedure
SQL	Sample Quantitation Limit
SSHS	Site Safety and Health Supervisor
STL Burlington	Severn Trent Laboratories of Colchester, Vermont

LIST OF ACRONYMS AND ABBREVIATIONS (continued)

TBD	to-be-determined
TC	Table of Contents
TCE	Trichloroethene
U	Undetected
UFP-QAPP	*Uniform Federal Policy for Quality Assurance Project Plans*
USACE	United States Army Corps of Engineers
USEPA	United States Environmental Protection Agency
Vo-Tech	Vocational-Technical
VOC	Volatile Organic Compound
WP/SAP	Work Plan/Sampling and Analysis Plan

* * * * *

INTRODUCTION

This *Quality Assurance Project Plan* (QAPP) provides a description of quality assurance (QA) and quality control (QC) procedures for executing a vapor intrusion investigation at Operable Unit – 1 (OU-1) at the former Schilling Air Force Base (AFB) Site, located in Salina, Kansas. The Site is located to the southwest of the city of Salina and is shown on Figure 1-1 in the *Draft Final Work Plan/Sampling and Analysis Plan for Vapor Intrusion Investigation, Former Schilling Air Force Base, CERCLA Process Support* ([WP/SAP] BMcD, 2006b).

The purpose of the QAPP is to establish the policies, organization, objectives, functional activities, and specific QA and QC activities for managing the project. This QAPP is intended to be used in conjunction with the WP/SAP, and these documents are bound together in the same notebook for ease of the reader. The scope and format of the QAPP was developed from the Intergovernmental Data Quality Task Force (IDQTF) protocols outlined in *Uniform Federal Policy for Quality Assurance Project Plans, Parts 1, 2a, and 2b* ([UFP-QAPP] IDQTF, 2005).

Malcolm Pirnie, Inc. (MP) has a contract with the United States Army Corps of Engineers (USACE) – Kansas City District (CENWK) to provide Comprehensive Environmental Response, Compensation, and Liability Act (CERCLA) support services at the former Schilling AFB Site. MP has subcontracted Burns & McDonnell Engineering Company, Inc. (BMcD) to prepare work plan documents, execute the fieldwork, provide daily quality control reports (DQCRs) and monthly reports, and perform data validation and reporting. Development of the QAPP, as well as laboratory contracting for both the primary and QA laboratories, will be provided by BMcD. The USACE-CENWK will be responsible for performing data analysis and interpretation.

SITE HISTORY AND DESCRIPTION

The Smoky Hill Army Air Base was built in 1942. The base name was changed to the Smoky Hill AFB in 1946 and to Schilling AFB in 1957. In 1942, the base encompassed 365 acres and house 5,000 military personnel. By 1967, the base had expanded to 4,000 acres.

In 1942, the base served as headquarters for the newly created Army Air Corps Unit, 20th Bomber Command, and became the first operational training base for B-29 bombers. The base remained a bomber base for five years after World War II ended and was deactivated in 1949.

In 1951, the base was reopened for the Korean War. Upon reactivation, several improvements to the facility were made, including a 25-mile long jet fuel pipeline that terminated at a bulk fuel tank farm on

the base. Additional improvements were made after the Strategic Air Command took over operational control of the base. These included construction of a training building, a boiler facility, a gas distribution system, and a bulk oil storage system. The base was designated a permanent Air Force installation in July 1953. B-47 bombers were operated from the facility.

In 1960, the bombardment wing was transferred to Forbes Air Force Base at Topeka. A squadron of Atlas F intercontinental ballistic missiles (ICBMs) and Nike surface-to-air missiles was deployed to twelve sites around the Schilling AFB and attached to the Schilling AFB for support. New facilities were constructed for storage and repair of both conventional and nuclear munitions and nuclear warhead maintenance. The Schilling AFB was also upgraded to receive B-52 bombers and KC-135 tankers.

The closure of Schilling AFB was announced in 1964 and the site was transferred to the Salina Airport Authority (SAA) in 1966. SAA has since used much of the property in operating the airfield, renamed the Salina Municipal Airport. The remainder of the former Schilling AFB is currently used for light-to-heavy industrial, aviation, and educational purposes. Many of these entities either lease property from the SAA or have purchased their properties outright. Major landowners/operators at the former Schilling AFB include the Kansas State University at Salina, the Salina Area Vocational Technical School, and Kansas National Guard. Local industries include but are not limited to Tony's Pizza, Schwan's Sales Enterprises, Raytheon (Beechcraft), Flower Aviation, and Moore's Midway Aviation.

More detailed information on the history of the former Schilling AFB Site can be found in the September 2005 *Final Remedial Investigation for Operable Unit One at the Former Schilling Air Force Base, Salina, Kansas* (USACE-CENWK, 2005).

INVESTIGATION HISTORY

The USACE–CENWK, the U.S. Environmental Protection Agency (USEPA) Region VII, and the Kansas Department of Health and Environment (KDHE) have conducted several environmental investigations at the former Schilling AFB. In 1993, CENWK tasked RUST Environmental and Infrastructure to conduct a Site Investigation (SI) in order to locate potential contamination in Areas of Suspected Contamination. CENWK personnel conducted an SI in 1996 to investigate newly identified Areas of Interest (AOIs) and to obtain additional information on selected areas identified by the RUST SI. If areas identified by the CENWK SI required additional investigation, they were included in the Remedial Investigation (RI) performed by BMcD. In 2000, the USEPA conducted an Expanded Site Investigation (ESI) that focused on groundwater and potential sources of contamination. Three phases of a Supplemental RI were conducted by CENWK and URS Group in 1999, 2003, and 2004. The Supplemental RI was conducted to

acquire data to address issues remaining from previous investigations. The indoor air at the Kansas State University Salina School of Technology has been the subject of two investigations. USEPA and KDHE sampled indoor air to determine if contaminants in the soil were migrating into the buildings by way of vapor intrusion.

Past investigations have revealed the presence of volatile organic compounds (VOCs) in groundwater. The primary constituents of interest at the former Schilling AFB Site are trichloroethene (TCE) and its associated degradation products, cis-1,2-dichloroethene (cis-1,2-DCE) and vinyl chloride, as well as carbon tetrachloride.

More detailed information on the investigation history of the former Schilling AFB Site can be found in the *Final Remedial Investigation for Operable Unit One at the Former Schilling Air Force Base, Salina, Kansas* (USACE-CENWK, 2005).

PURPOSE

The purpose of this vapor intrusion investigation is to assess the potential for human exposure associated with the vapor intrusion pathway for most buildings in OU-1 that are located within the 100 microgram per liter (μg/L) total chlorinated solvents groundwater plume as defined in the September 2005 *Final Remedial Investigation for Operable Unit One at the Former Schilling Air Force Base, Salina, Kansas* (USACE-CENWK, 2005). The portions of OU-1 containing the 100 μg/L total chlorinated solvents groundwater plume are identified on Figure 1-2 of the WP/SAP. This study likely constitutes the beginning of vapor intrusion studies at the former Schilling AFB. The 100 μg/L total chlorinated solvents groundwater plume was selected as the initial study area due to high chemical concentrations in groundwater rendering indoor air contamination more likely to be detected.

ORGANIZATION OF QAPP ELEMENTS

This QAPP has been prepared by BMcD as part of the project planning documents for a vapor intrusion investigation of OU-1. The QAPP is organized as follow:

Main Body of QAPP:

- Introduction
- UFP-QAPP Format Worksheets and Supporting Documentation
- References

Appendices to QAPP:

- Appendix A – Columbia Analytical Services, Inc. *Quality Assurance Manual* ([QAM] Columbia, 2006)
- Appendix B – Severn Trent Laboratories, Inc. Quality Management Plan ([QMP] STL, 2003)
- Appendix C - *Compendium Method TO-15, Determination of Volatile Organic Compounds (VOCs) in Air Collected in Specially-Prepared Canisters And Analyzed by Gas Chromatography/Mass Spectroscopy (GC/MS)* (USEPA, 1999)
- Appendix D – *Model 580B Organic Vapor Meter (OVM)/Datalogger Instruction Manual*
- Appendix E – *Kansas City District Data Quality Evaluation Guidance* (USACE-CENWK, 2006)

In addition, the QAPP references information that is presented in other project documents that is not repeated here to avoid unnecessary duplication. These documents include:

- *Final Quality Control Plan, Former Schilling Air Force Base, CERCLA Process Support* (BMcD, 2006a)

- *Final Work Plan/Sampling and Analysis Plan for Vapor Intrusion Investigation, Former Schilling Air Force Base, CERCLA Process Support* (BMcD, 2006b)

- *Final Accident Prevention Plan / Site Safety and Health Plan for Vapor Intrusion Investigation, Former Schilling Air Force Base, CERCLA Process Support* (BMcD, 2006c)

* * * * * *

QAPP Worksheet #1
(UFP-QAPP Manual Section 2.1)
Title and Approval Page

Site Name/Project Name: Former Schilling Air Force Base CERCLA Process Support

Site Location: OU-1, Former Schilling Air Force Base, Salina, Kansas

Document Title: ***Final Quality Assurance Project Plan for Vapor Intrusion Investigation, Former Schilling Air Force Base, CERCLA Process Support, Salina, Kansas***

Lead Organization: **USACE-CENWK**

Preparer's Name and Organizational Affiliation: Sharon Shelton, BMcD

Preparer's Address, Telephone Number, & E-Mail Address: 9400 Ward Pkwy, Kansas City, MO 64114
(816) 822-3168
sshelton@burnsmcd.com

Preparation Date (Day/Month/Year): 16/June/2006

Investigative Organization's Project Manager/Date: T Cooley 8-16-06
Signature

Printed Name/Organization: Tracy Cooley, BMcD

Investigative Organization's Project QA Officer/Date: Colm Chomicky 8-16-06
Signature

Printed Name/Organization: Colm Chomicky, BMcD

Primary Contractor's Project Manager/Date: John M Logigian 8/16/06
Signature

Printed Name/Organization: John Logigian, MP

Approval Signature & Lead Organization's Project Manager/Date: _____
Signature

Printed Name/Organization: Robyn Kiefer, USACE-CENWK

Approval Signature/Date: Robyn Kiefer 8/16/06
Signature

Printed Name/Title:
Approval Authority:

Approval Signature/Date: _____
Signature

Printed Name/Title:
Approval Authority:

Other Approval Signature/Date: _____
Signature

Printed Name/Title:
Approval Authority:

Document Control Numbering System: See QAPP Cover and Worksheet #3

QAPP Worksheet #1
(UFP-QAPP Manual Section 2.1)
Title and Approval Page

Site Name/Project Name: Former Schilling Air Force Base CERCLA Process Support

Site Location: OU-1, Former Schilling Air Force Base, Salina, Kansas

Document Title: ***Final Quality Assurance Project Plan for Vapor Intrusion Investigation, Former Schilling Air Force Base, CERCLA Process Support, Salina, Kansas***

Lead Organization: **USACE-CENWK**

Preparer's Name and Organizational Affiliation: Sharon Shelton, BMcD

Preparer's Address, Telephone Number, & E-Mail Address: 9400 Ward Pkwy, Kansas City, MO 64114
(816) 822-3168
sshelton@burnsmcd.com

Preparation Date (Day/Month/Year): 16/June/2006

Investigative Organization's Project Manager/Date:_____
Signature
Printed Name/Organization: Tracy Cooley, BMcD

Investigative Organization's Project QA Officer/Date:_____
Signature
Printed Name/Organization: Colm Chomicky, BMcD

Primary Contractor's Project Manager/Date:_____
Signature
Printed Name/Organization: John Logigian, MP

Approval Signature & Lead Organization's Project Manager/Date:_____
Signature
Printed Name/Organization: Robyn Kiefer, USACE-CENWK

Approval Signature/Date:_____
Signature
Printed Name/Title:
Approval Authority:

Approval Signature/Date:_____
Signature
Printed Name/Title:
Approval Authority:

Other Approval Signature/Date:_____
Signature
Printed Name/Title:
Approval Authority:

Document Control Numbering System: See QAPP Cover and Worksheet #3

QAPP Worksheet #2
(UFP-QAPP Manual Section 2.2.4)
QAPP Identifying Information

Site Name: Former Schilling Air Force Base, Salina, Kansas

Project Name: Vapor Intrusion Investigation

Site Number/Code: FUDS ID# B07KSO256-03

Operable Unit: Operable Unit One (OU-1)

Contractor Name: MP and BMcD

Contract Number: W912DQ-06-D-0006

Contract Title: Former Schilling Air Force Base CERCLA Process Support

Work Assignment Number: Task 2

1. **Identify guidance used to prepare QAPP:** *Uniform Federal Policy for Quality Assurance Project Plans, Parts 1, 2a, and 2b, Final, Version 1, March 2005 (IDQTF, 2005)*

2. **Identify regulatory program:** Formerly Used Defense Sites (FUDS) that is using the CERCLA Process as a framework for work being performed

3. **Identify approval entity:** USACE-CENWK

4. **The QAPP is (select one):** Generic **Project Specific**

5. **List data of scoping sessions that were held:** April 13, 2006, April 20, 2006, May 11, 2006, and May 16, 2006

6. **List dates and titles of QAPP documents written for previous site work, if applicable:**

Title	Approval Date
None applicable to the vapor intrusion project	

7. **List organizational partners (stakeholders) and connection with lead organization:**
KDHE – Review and Concurrence
USEPA, Region 7 – Review and Concurrence

8. **List data users:** USACE-CENWK, MP, BMcD, KDHE, USEPA-Region 7, and SAA

9. **If any required QAPP elements and required information are not applicable to the project, then circle the omitted QAPP elements and required information on the attached table. Provide an explanation for their exclusion below:**

   - Section 5.3 – Streamlining Data Review is not applicable. No streamlining of the data review process is being performed.

QAPP Worksheet #2
QAPP Identifying Information
(continued)

Circle QAPP elements and required information that are not applicable to the project. Provide an explanation in the QAPP.

Referenced documents include:
WP/SAP = *Final Work Plan/Sampling and Analysis Plan for Vapor Intrusion Investigation, Former Schilling Air Force Base, CERCLA Process Support, Salina, Kansas* (BMcD, 2006b)

QCP = *Final Quality Control Plan, Former Schilling Air Force Base, CERCLA Process Support, Salina, Kansas* (BMcD, 2006a)

Required QAPP Element(s) and Corresponding QAPP Section(s)	Crosswalk to Referenced Documents	QAPP Worksheet # or Page #	Required Information
Project Management and Objectives			
2.1 Title and Approval Page		#1	- Title and Approval Page
2.2 Document Format and Table of Contents 2.2.1 Document Control Format 2.2.2 Document Control Numbering System 2.2.3 Table of Contents 2.2.3 QAPP Identifying Information		TC-1 to TC-5 #2 #3	- Table of Contents - QAPP Identifying Information - Document Control Numbering
2.3 Distribution List and Project Personnel Sign-Off Sheet 2.3.1 Distribution List 2.3.2 Project Personnel Sign-Off Sheet		#3 #4-1 to 4-5	- Distribution List - Project Personnel Sign-Off Sheet
2.4 Project Organization 2.4.1 Project Organizational Chart 2.4.2 Communication Pathways 2.4.3 Personnel Responsibilities and Qualifications 2.4.4 Special Training Requirements and Certification	See also QCP Section 2.0	#5 #6 #7 #8	- Project Organizational Chart - Communication Pathways - Personnel Responsibilities and Qualifications Table - Special Personnel Training Requirements Table
2.5 Project Planning/Problem Definition 2.5.1 Project Planning (Scoping) 2.5.2 Problem Definition, Site History, and Background	WP/SAP Section 1.0 and 3.1. Site maps include WP/SAP Figures 1-1 and 1-2	#9-1 to 9-5 #10	- Project Planning Session Documentation (including Data Needs tables) - Project Scoping Session Participants Sheet - Problem Definition, Site History, and Background

Required QAPP Element(s) and Corresponding QAPP Section(s)	Crosswalk to Referenced Documents	QAPP Worksheet # or Page #	Required Information
			- Site Maps (historical and present)
2.6 Project Quality Objectives and Measurement Performance Criteria 2.6.1 Development of Project Quality Objectives Using the Systematic Planning Process 2.6.2 Measurement Performance Criteria	WP/SAP Sections 2.0 and 3.0, also WP/SAP Appendix B	#11 #12-1 and 12-2	- Site-Specific PQOs - Measurement Performance Criteria Table
2.7 Secondary Data Evaluation		#13	- Sources of Secondary Data and Information - Secondary Data Criteria and Limitations Table
2.8 Project Overview and Schedule 2.8.1 Project Overview 2.8.2 Project Schedule	WP/SAP Section 2.0 and 3.0	#14 #15 #16	- Summary of Project Tasks - Reference Limits and Evaluation Table - Project Schedule/Timeline Table
Measurement/Data Acquisition			
3.1 Sampling Tasks 3.1.1 Sampling Process Design and Rationale 3.1.2 Sampling Procedures and Requirements 3.1.2.1 Sampling Collection Procedures 3.1.2.2 Sample Containers, Volume, and Preservation 3.1.2.3 Equipment/ Sample Containers Cleaning and Decontamination Procedures 3.1.2.4 Field Equipment Calibration, Maintenance, Testing, and Inspection Procedures 3.1.2.5 Supply Inspection and Acceptance Procedures	WP/SAP Section 3.0 and associated tables, figures, and appendices. See also QAPP Appendix D	#17 #18 #19 #20 #21 #22	- Sampling Design and Rationale - Sample Location Map - Sampling Locations and Methods/ SOP Requirements Table - Analytical Methods/SOP Requirements Table - Field Quality Control Sample Summary Table - Sampling SOPs - Project Sampling SOP References Table - Field Equipment Calibration, Maintenance, Testing, and Inspection Table

Required QAPP Element(s) and Corresponding QAPP Section(s)	Crosswalk to Referenced Documents	QAPP Worksheet # or Page #	Required Information
3.1.2.6 Field Documentation Procedures			
3.2 Analytical Tasks 3.2.1 Analytical SOPs 3.2.2 Analytical Instrument Calibration Procedures 3.2.3 Analytical Instrument and Equipment Maintenance, Testing, and Inspection Procedures 3.2.4 Analytical Supply Inspection and Acceptance Procedures	See also QAPP Appendix A for Columbia Analytical *Quality Assurance Manual* and QAPP Appendix B for STL Burlington *Quality Management Plan* QAPP Appendix C for Method TO-15	#23 #24 #25	- Analytical SOPs - Analytical SOP References Table - Analytical Instrument Calibration Table - Analytical Instrument and Equipment Maintenance, Testing, and Inspection Table
3.3 Sample Collection Documentation, Handling, Tracking, and Custody Procedures 3.3.1 Sample Collection Documentation 3.3.2 Sample Handling and Tracking System 3.3.3 Sample Custody	WP/SAP Sections 3.5, 3.6, and 3.7. See also WP/SAP Appendix A for field forms	#26 #27	- Sample Handling Flow Diagram - Sample Collection Documentation Handling, Tracking, and Custody SOPs - Sample Container Identification - Example Chain-of-Custody Form and Seal
3.4 Quality Control Samples 3.4.1 Sampling Quality Control Samples 3.4.2 Analytical Quality Control Samples		#28-1 to 28-2	- QC Samples Table - Screening/Confirmatory Analysis Decision Tree
3.5 Data Management Tasks 3.5.1 Project Documentation and Records 3.5.2 Data Package Deliverables 3.5.3 Data Reporting Formats 3.5.4 Data Handling and Management 3.5.5 Data Tracking and Control	WP/SAP Sections 2.2, 3.5, and 3.7 QCP Section 5.0	#29 #30	- Project Documents and Records Table - Analytical Services Table - Data Management SOPs

Required QAPP Element(s) and Corresponding QAPP Section(s)	Crosswalk to Referenced Documents	QAPP Worksheet # or Page #	Required Information
Assessment/Oversight			
4.1 Assessments and Response Actions 4.1.1 Planned Assessments 4.1.2 Assessment Findings and Corrective Action Responses		#31 #32	- Assessments and Response Actions - Planned Project Assessments Table - Audit Checklists - Assessment Findings and Corrective Action Responses Table
4.2 QA Management Reports	WP/SAP Section 2.2	#33	- QA Management Reports Table
4.3 Final Project Report	WP/SAP Section 2.2.4		
Data Review			
5.1 Overview			
5.2 Data Review Steps 5.2.1 Step I: Verification 5.2.2 Step II: Validation 5.2.2.1 Step IIa Validation Activities 5.2.2.2 Step IIb Validation Activities 5.2.3 Step III: Usability Assessment 5.2.3.1 Data Limitations and Actions from Usability Assessment 5.2.3.2 Activities	See also QAPP Appendix E	#34 #35 #36 #37	- Verification (Step I) Process Table - Validation (Steps IIa and IIb) Process Table - Validation (Steps IIa and IIb) Summary Table - Usability Assessment
5.3 Streamlining Data Review 5.3.1 Data Review Steps To Be Streamlined 5.3.2 Criteria for Streamlining Data Review 5.3.3 Amounts and Types of Data Appropriate for Streamlining	Not applicable	Not Applicable	Not applicable. No streamlining of the data review process is being performed.

SOP = Standard Operating Procedure

* * * * *

QAPP Worksheet #3
(UFP-QAPP Manual Section 2.3.1)
Distribution List

The distribution list for controlled copies of the QAPP is maintained by and updated by BMcD as the QAPP preparation organization. Controlled copies of the QAPP are assigned to personnel within each project organization. Recipients of controlled copies are provided with all revisions to the QAPP and are responsible for removing all outdated materials from circulation within their organization. Personnel responsible for controlled copies of the document are responsible for distributing QAPP updates and revisions to personnel within their organization. Project team members will have access to controlled copies of the document through the project managers listed here. Personnel with access to the QAPP include, but are not limited to: Project Engineer, Project Technical Leads, Project Chemist, QA Officer, QC Coordinator, Field Site Manager (FSM), field team members, and laboratory staff.

QAPP Recipients	Title	Organization	Telephone Number	Fax Number	E-mail Address	Document Control Number
Tracy Cooley	Project Manager	BMcD	816-822-3369	816-822-3494	tcooley@burnsmcd.com	OU1-VI-QAPP-001
John Logigian	Project Manager	MP	914-641-2690	914-641-2455	jlogigian@pirnie.com	OU1-VI-QAPP-002
Robyn Kiefer	Project Manager	USACE-CENWK	816-389-3615	816-426-5550	robyn.v.kiefer@usace.army.mil	OU1-VI-QAPP-003
Leo Henning	Project Manager	KDHE	785-296-1914	785-296-4823	LHenning@kdhe.state.ks.us	OU1-VI-QAPP-004
Ken Rapplean	Project Manager	USEPA	913-551-7769	913-551-7063	rapplean.kenneth@epa.gov	OU1-VI-QAPP-005
Michael Tuday	Project Manager	Columbia	805-526-7161	805-526-7270	MTuday@simi.caslab.com	OU1-VI-QAPP-006
Don Dawicki	Project Manager	STL Burlington	802-655-1203	802-655-1248	DDawicki@stl-inc.com	OU1-VI-QAPP-007

* * * * *

QAPP Worksheet #4
(UFP-QAPP Manual Section 2.3.2)
Project Personnel Sign-Off Sheet

Worksheet #4-1 USACE-CENWK

Key project personnel from each organization should sign copies of this form to indicate that they have read the applicable QAPP sections and will perform the tasks as described. Each organization will forward signed sheets to BMcD for inclusion in the project file.

Project Personnel	Title	Telephone Number	Signature	Date QAPP Read Email Receipt
Robyn Kiefer	Project Manager	816-389-3615		
Kirk Boese	Project Engineer	816-389-3558		
Vanessa Bauders	Project Technical Lead	816-389-3567		
Amy Darpinian	Project Chemist	816-389-3897		

Worksheet #4-2 MP

Key project personnel from each organization should sign copies of this form to indicate that they have read the applicable QAPP sections and will perform the tasks as described. Each organization will forward signed sheets to BMcD for inclusion in the project file.

Project Personnel	Title	Telephone Number	Signature	Date QAPP Read Email Receipt
John Logigian	Project Manager	914-641-2690		

Worksheet #4-3 BMcD

Key project personnel from each organization should sign copies of this form to indicate that they have read the applicable QAPP sections and will perform the tasks as described. Each organization will forward signed sheets to BMcD for inclusion in the project file.

Project Personnel	Title	Telephone Number	Signature	Date QAPP Read Email Receipt
Tracy Cooley	Project Manager	816-822-3369		
Diana Marquez	Project Technical Lead	816-822-3453		
Sharon Shelton	Project Chemist	816-822-3168		
Ed Lindgren	QC Coordinator	816-822-3595		
Colm Chomicky	Project QA Officer	816-822-3889		
To Be Assigned	Field Team Members		When assigned, project team members will be required to sign that they have read applicable sections of the QAPP.	Project team members must read applicable sections of the QAPP prior to participating in the project.

Worksheet #4-4 Columbia

Key project personnel from each organization should sign copies of this form to indicate that they have read the applicable QAPP sections and will perform the tasks as described. Each organization will forward signed sheets to BMcD for inclusion in the project file.

Project Personnel	Title	Telephone Number	Signature	Date QAPP Read Email Receipt
Michael Tuday	Project Manager	805-526-7161		

Worksheet #4-5 STL Burlington

Key project personnel from each organization should sign copies of this form to indicate that they have read the applicable QAPP sections and will perform the tasks as described. Each organization will forward signed sheets to BMcD for inclusion in the project file.

Project Personnel	Title	Telephone Number	Signature	Date QAPP Read Email Receipt
Don Dawicki	Project Manager	802-655-1203		

* * * * *

QAPP Worksheet #5
(UFP-QAPP Manual Section 2.4.1)
Project Organizational Chart

A project organizational chart is presented on Figure 5-1. The *Final Quality Control Plan, Former Schilling Air Force Base, CERCLA Process Support* (BMcD, 2006a) further defines the QC teams, roles, and responsibilities within BMcD and MP.

U.S. ARMY CORPS OF ENGINEERS

The USACE-CENWK serves as the lead organization for the project. Ms. Robyn Kiefer is the USACE-CENWK Project Manager for the project and will serve as the primary point of contact for all project-related questions. Ms. Kiefer will also serve as the point of contact with regulatory entities and members of the general public on matters regarding the project.

MALCOLM PIRNIE, INC.

MP has overall responsibility for the project to the USACE-CENWK. MP will act as the program administrator and provide independent QC of all submittals. Mr. John Logigian is the MP Project Manager for the vapor intrusion investigation.

BURNS & MCDONNELL ENGINEERING COMPANY, INC.

Mr. Tracy Cooley will serve as the BMcD Project Manager. Mr. Cooley will be responsible for complete coordination of the work, including adequate internal controls and review procedures to eliminate conflicts, errors, and to verify technical accuracy. In addition, Mr. Cooley is responsible for overseeing activities involving sampling and performance of audits.

Ms. Diana Marquez will serve at the Technical Lead for the project. She has expertise in vapor intrusion investigations and collection of soil vapor and indoor air samples. Ms. Marquez will provide BMcD team members technical guidance during project implementation.

Mr. Ed Lindgren will serve as the QC Coordinator for activities conducted by BMcD. Mr. Lindgren will be responsible for day-to-day project oversight and QC related to project activities.

Ms. Sharon Shelton will serve as the Project Chemist for BMcD. In this role, she will act as both the QAPP preparer and data validator. The Project Chemist will also oversee activities involving laboratory analyses and data validation.

A BMcD FSM and the Site Safety and Health Supervisor (SSHS) who is experienced in vapor intrusion sampling will be designated for each sampling event. The FSM/SSHS will supervise the field activities relevant to this project and will have direct responsibility for site-specific activities and decisions regarding the immediate safety of investigation personnel. The FSM/SSHS will report to the BMcD Project Manager and the BMcD Safety and Health Officer.

Mr. Eric Wenger, Industrial Hygienist, will serve as the BMcD Safety and Health Officer for this project and will have ultimate responsibility for the health and safety of field personnel.

PRIMARY ANALYTICAL LABORATORY

Columbia Analytical Services, Inc. (Columbia) is the contract laboratory for the analysis of sub-slab soil vapor and indoor air samples for the project. In addition to providing sample analysis, Columbia will also provide sampling canisters, flow regulators/particulate filters, and vacuum gauges that are needed for sample collection. Columbia will be contracted by BMcD. The address for Columbia is listed below.

Columbia Analytical Services, Inc.
2665 Park Center Drive, Ste. D
Simi Valley, California 93065
Phone: (805) 526-7161
Point of Contact (POC): Michael Tuday

As indicated in the USACE-CENWK Scope of Work, the analytical laboratories performing sample analysis are required to be certified by the National Environmental Laboratory Accreditation Program (NELAP) and accredited by the American Industrial Hygiene Association (AIHA). In addition, it is preferable to submit samples to laboratories that also have declared compliance with the most recent update to the Department of Defense (DoD) Quality Systems Manual (QSM) Final Version 3 (DoD, 2006). Columbia, the primary analysis laboratory, has indicated their intention to make such a declaration prior to the onset of field sampling activities. Following this declaration, an assessment will be made by USACE that the laboratory's self-declaration is accurate, and an assessment report will be filed with the USACE Center for Expertise (CX) and DoD LabWatch database. In the event that Columbia is unable to declare compliance with the DoD QSM, Columbia's QAM and SOPs will be assessed to ensure adequate capability, capacity, and performance to meet project quality objects (PQOs). Columbia's organizational structure and responsibilities, including an organizational chart, are described in the laboratory's QAM (See Appendix A).

QUALITY ASSURANCE LABORATORY

Severn Trent Laboratories of Burlington, Vermont (STL Burlington) is the QA laboratory for the project. STL Burlington will provide analysis of QA split samples for comparison with samples analyzed by Columbia. In addition to providing sample analysis, STL Burlington will also provide sampling canisters, flow regulators/particulate filters, and vacuum gauges that are needed for sample collection. The methodology and equipment provided by the QA laboratory will be functionally equivalent to that of Columbia (same canister volume, same analytical method, etc.). STL Burlington will be contracted by BMcD. The address for STL Burlington is listed below.

STL Burlington
208 South Park Drive, Suite 1
Colchester, Vermont 05446
Phone: (802) 655-1203
POC: Don Dawicki

The minimum certification requirement for the QA laboratory is NELAP. Efforts were made to obtain services from a laboratory that was also accredited by the AIHA and compliant with the DoD QSM. STL Burlington is currently operating under USACE Hazardous, Toxic, and Radioactive Waste (HTRW) validation that expires in September 2006. USACE policy allows laboratories to be grandfathered as meeting the DoD QSM requirement until such time as their USACE HTRW validation expires (USACE, 2004). When STL-Burlington's USACE HTRW validation expires, the laboratory intends to finalize self-declaration as compliant with the DoD QSM. Following this declaration, an assessment will be made by USACE that the laboratory's self-declaration is accurate, and an assessment report will be filed with the USACE CX and DoD LabWatch database. In the event that STL Burlington is unable to declare compliance with the DoD QSM, STL Burlington's Quality Manual and SOPs will be assessed to ensure adequate capability, capacity, and performance to meet PQOs. STL's organizational structure and responsibilities, including an organizational chart, are described in the QMP (See Appendix B).

REGULATORY ORGANIZATIONS

The KDHE and USEPA will provide regulatory review of project documents, and USACE-CENWK will seek concurrence from KDHE and USEPA regarding project activities. Mr. Leo Henning will serve as the KDHE Project Manager. Mr. Ken Rapplean will serve as the USEPA Region 7 Project Manager.

* * * * *

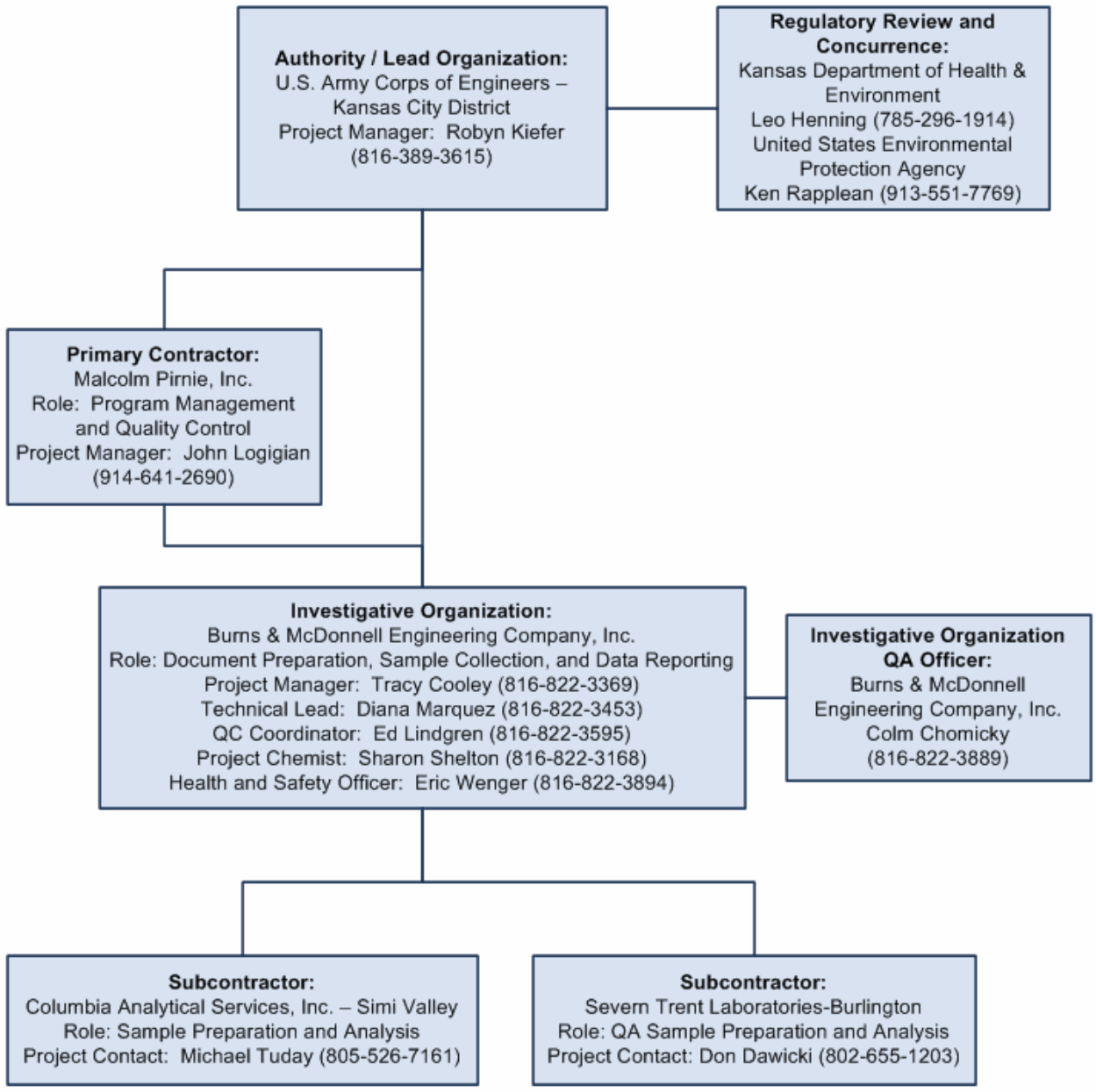

Burns & McDonnell SINCE 1898

Figure 5-1
Project Organizational Chart
Former Schilling Air Force Base
Salina, Kansas

QAPP Worksheet #6
(UFP-QAPP Manual Section 2.4.2)
Communication Pathways

Communication between project team members is important for a successful project. Project communication pathways and procedures for the timing, and modes of communication are outlined in the following text and table. BMcD and MP personnel will communicate primarily with the USACE-CENWK Project Manager. Communication with other government entities (USEPA, KDHE, SAA, etc.) will be coordinated by USACE-CENWK. Questions from the general public regarding project activities will be directed to the USACE-CENWK Project Manager.

If, during the course of field activities, it becomes necessary to vary approved work plans, verbal approval from the USACE-CENWK Project Manager will be required. The verbal approval shall be documented by the project team and should be followed by a written approval from the USACE-CENWK. The approval prepared by the project team shall evaluate schedule, cost, and quality impacts, and will include justification and rationale for the proposed variances. Minor variances (i.e., changing the order of planned sample collection activities, minor adjustment of the sampling locations within buildings, minor adjustment of procedures which are not expected to impact data quality, etc.) can be implemented in the field prior to written approval. Major variances (i.e., addition or deletion of sampling locations, changes in leak test procedures, change in sample collection rates, change of analytical method, and/or a change in data acceptance or rejection procedures) require documented verbal approval, at a minimum, prior to implementation. Most major deviations from planned activities will require revision or addendum to the QAPP by BMcD personnel. At a minimum, a technical memorandum will be submitted to the project file that summarizes the nature of the deviation and its anticipated impact to the project.

Communication Drivers	Responsible Entity	Name	Phone Number	Procedure (timing, pathways, etc.)
Point of Contact with KDHE and USEPA Region 7	USACE-CENWK Project Manager	Robyn Kiefer	816-389-3615	Materials and information about the project will go to the regulatory entities through the lead organization.
Back-up Point-of-Contact for Lead Organization	USACE-CENWK Project Engineer	Kirk Boese	816-389-3558	In the event that the lead organization project manager is not available, the project engineer will serve as a backup point of contact.

Communication Drivers	Responsible Entity	Name	Phone Number	Procedure (timing, pathways, etc.)
Manage all project phases	MP Project Manager	John Logigian	914-641-2690	John Logigian will be MP's liaison between Robyn Kiefer, USACE-CENWK and Tracy Cooley, BMcD
Manage all project phases	BMcD Project Manager	Tracy Cooley	816-822-3369	Tracy Cooley will be BMcD's liaison to Robyn Kiefer, USACE-CENWK and John Logigian, MP
Back-up Point-of-Contact for Investigative Organization	BMcD QC Coordinator	Ed Lindgren	816-822-3595	In the event that the investigative organization's project manager is not available, the QC Coordinator will serve as a backup point of contact.
Field Adjustments / Changes	BMcD FSM/SHSS	To Be Assigned		The FSM will notify Tracy Cooley of any field adjustments and reasons for same at the time of occurrence. Tracy Cooley will notify by phone or email John Logigian and Robyn Kiefer within one business day.
Stop Work and Initiation of Corrective Action	BMcD FSM/SHSS	To Be Assigned		The FSM/SHSS will notify Tracy Cooley as soon as possible of any work stoppages and implemented corrective actions due to health and safety considerations. Tracy Cooley will notify by phone or email John Logigian and Robyn Kiefer within one business day.
Stop Work and Initiation of Corrective Action	BMcD Project Manager	Tracy Cooley	816-822-3369	Tracy Cooley will notify John Logigian and Robyn Kiefer as soon as possible of any work stoppages and implemented corrective actions.
Daily Field Quality Control Reports	BMcD Field Site Manager	To Be Assigned		The FSM will submit via fax or email DQCRs to Tracy Cooley within one business day of sampling. Tracy Cooley will forward the DQCRs to John Logigian and Robyn Kiefer via fax or email upon receipt.

Communication Drivers	Responsible Entity	Name	Phone Number	Procedure (timing, pathways, etc.)
Reporting Lab Data Quality Issues	Columbia Project Manager	Michael Tuday	805-526-7161	Any QA/QC problems with the project field samples will be reported by Michael Tuday to the BMcD Technical Lead or Chemist within 2 business days. The problem, potential impact, and proposed corrective action will be presented to Tracy Cooley for transmittal to John Logigian and Robyn Kiefer.
Reporting Lab Data Quality Issues	STL Burlington Project Manager	Don Dawicki	802-655-1203	Any QA/QC problems with the project field samples will be reported by the QA Lab's Project Manger to the BMcD Technical Lead or Chemist within 2 business days. The problem, potential impact, and proposed corrective action will be presented to Tracy Cooley for transmittal to John Logigian and Robyn Kiefer.
Field and Analytical and Corrective Action	Project QC Coordinator	Ed Lindgren	816-822-3595	The need for corrective action for field and analytical problems will be determined by the QC Coordinator following discussions with the appropriate project technical personnel. Corrective actions will be documented on the DQCR or transmitted verbally or by email to the MP and USACE-CENWK Project Managers.
QAPP Revisions	USACE-CENWK Project Manager	Robyn Kiefer	816-389-3615	Any major changes to the QAPP must be approved by the USACE-CENWK Project Manager before the change can be implemented.

* * * * *

QAPP Worksheet #7
(UFP-QAPP Manual Section 2.4.3)
Personnel Responsibilities and Qualifications Table

Resumes are located in the offices of each organization and are available upon request. In addition, resumes for Columbia are provided in the laboratory's *QAM*, which is included as Appendix A to this QAPP. Responsibilities were also discussed previously on QAPP Worksheet #5.

Name	Title	Organizational Affiliation	Responsibilities	Education and Experience Qualifications
Robyn Kiefer	Project Manager	USACE-CENWK	Oversees all aspects of the project and acts as liaison with regulatory agencies and general public.	B.S., Petroleum Engineering M.S., Civil Engineering Project Manager Professional 18 years experience
John Logigian	Project Manager	MP	Manages Project – coordinates between lead agency and investigative contractor.	B.S., Biology and Chemistry M.S., Chemical Engineering 10 years experience as an industrial chemical engineer 18 years experience as a remediation engineer and environmental project manager
Tracy Cooley	Project Manager	BMcD	Manages Project – coordinates document preparation, field samplings, and data reporting. Coordinates with primary contractor.	B.S., Geology 21 years experience
Diana Marquez	Technical Lead	BMcD	Acts as technical expert for sub-slab air and indoor air sampling and analysis.	B.S., Biology M.S., Toxicology 13 years experience
Sharon Shelton	QAPP Preparer Data Reviewer	BMcD	Prepares QAPP Performs data validation	B.S., Biology M.S., Environmental Science 12 years experience
Ed Lindgren	QC Coordinator	BMcD	Day-to-day QC oversight of project operations	B.S., Geology M.S., Geology 10 years experience

Name	Title	Organizational Affiliation	Responsibilities	Education and Experience Qualifications
Eric Wenger	Health and Safety Officer	BMcD	Responsibility for the health and safety of field personnel	B.S., Biology and Education M.S., Industrial Hygiene Certified Industrial Hygienist 16 years experience
To Be Assigned	Field Site Manager	BMcD	Supervises field sampling and coordinates all field activities	
Michael Tuday	Project Manager	Columbia	Manages generation and reporting of analytical data.	B.S., Chemistry 26 years experience See QAM, Appendix A
Lynne Nelson	Quality Assurance Program Manager	Columbia	Performs laboratory QA oversight.	B.S., Professional Biology B.S., Chemistry 15 years experience See QAM, Appendix A
Don Dawicki	Project Manager	STL Burlington	Manages generation and reporting of analytical data.	Engineering Laboratory Technician School Nuclear Prototype Training Unit Nuclear Power School 17 years experience

* * * * *

QAPP Worksheet #8
(UFP-QAPP Manual Section 2.4.4)
Special Personnel Training Requirements Table

Field personnel training records are maintained in the BMcD corporate offices. The minimum health and safety training for the field sampling team is 40-hour Hazardous Waste Operations and Emergency Response (HAZWOPER) training and annual refreshers. In addition, the FSM will have HAZWOPER 8-Hour Supervisor Training. While no specific professional certification or training is available for collection of sub-slab soil vapor samples and/or indoor air samples, at least one member of the field sampling team will have experience with the sample collection techniques presented in the WP/SAP.

Project Function	Specialized Training By Title or Description of Course	Training Provider	Training Date	Personnel / Groups Receiving Training	Personnel Titles / Organizational Affiliation	Location of Training Records / Certificates[1]
Field Sampling	HAZWOPER 40-Hour Initial Training	BMcD	Various[2]	All members of the field sampling team.	All members of the field sampling team – BMcD	BMcD Offices Certificates available upon request
Field Sampling	HAZWOPER 8-Hour Refresher Training	BMcD	Various[2]	All members of the field sampling team.	All members of the field sampling team – BMcD	BMcD Offices Certificates available upon request
Field Site Supervisor	HAZWOPER 8-Hour Supervisor Training	BMcD	Various[2]	FSM	FSM - BMcD	BMcD Offices Certificates available upon request

[1]Documentation of training is maintained by the BMcD Human Resources Department
[2] Training dates are kept in training records that are maintained by the BMcD Human Resources Department.

As indicated in the USACE-CENWK Scope of Work, the analytical laboratories performing sample analysis are required to be certified by the NELAP and accredited by the AIHA. In addition, it is preferable to submit samples to laboratories that also have declared compliance with the most recent update to the DoD QSM Final Version 3 (DoD, 2006). Columbia, the primary analysis laboratory, has indicated their intention to make such a declaration prior to the onset of field sampling activities. Following this declaration, an assessment will be made by USACE that the laboratory's self-declaration is accurate, and an assessment report will be filed with the USACE-CX and DoD LabWatch database. In the event that Columbia is unable to declare compliance with the DoD QSM, Columbia's QAM and SOPs will be assessed to ensure adequate capability, capacity, and performance to meet PQOs.

The minimum certification requirement for the QA laboratory is NELAP. In addition, the methodology and equipment provided by the QA laboratory is required to be functionally equivalent to that of Columbia (same canister volume, same analytical method, etc.). Efforts were made to obtain services from a laboratory that was also accredited by the AIHA and compliant with the DoD QSM. Given the limited number of laboratories that were identified as capable of providing the required equipment and methodology, it was not be possible to select a QA laboratory that met all of the certification/accreditation criteria. However, STL Burlington is certified by NELAP and is also operating under an existing USACE HTRW validation and intends to self-declare compliance with DoD QSM upon expiration of this validation. These certifications were determined to be acceptable for the QA laboratory for the vapor intrusion project.

* * * * *

QAPP Worksheet #9
(UFP-QAPP Manual Section 2.5.1)
Project Scoping Session Participants Sheet

QAPP Worksheet #9-1 April 13, 2006 Scoping Meeting

Project Name: Vapor Intrusion Investigation **Projected Date(s) of Sampling:** August 2006 and Winter 2006 **Project Manager:** Robyn Kiefer, USACE	**Site Name:** OU-1, Former Schilling Air Force Base **Site Location:** Salina, Kansas

Date of Session: April 13, 2006
Scoping Session Purpose: Schilling CERCLA Support Kick-Off Meeting

Name	Title	Affiliation	Phone #	E-mail Address	Project Role
Robyn Kiefer	Project Manager	USACE	816-389-3615	robyn.v.kiefer@usace.army.mil	Project Manager
Kirk Boese	Project Engineer	USACE	816-389-3558	kirk.d.boese@usace.army.mil	Project Engineer
Chuck Williams	Geologist	USACE	816-389-3575	chuck.e.williams@usace.army.mil	Geologist
Julia Kisser	Geologist	USACE	816-389-3874	Julia.k.kisser@usace.army.mil	Geologist
Jerry Montgomery	Chemist	USACE	816-389-3904	jerry.a.montgomery@usace.army.mil	Chemist
Vanessa Bauders	Industrial Hygienist	USACE	816-389-3567	vanessa.j.bauders@usace.army.mil	Technical Lead
David Daniel	Risk Assessor	USACE	816-389-3910	david.r.daniel@usace.army.mil	Risk Assessor
John Logigian	Project Manager	MP	914-641-2690	jlogigian@pirnie.com	Project Manager
Tracy Cooley	Project Manager	BMcD	816-822-3369	tcooley@burnsmcd.com	Project Manager
Ed Lindgren	QC Coordinator	BMcD	816-822-3595	elindgren@burnsmcd.com	Project QC Coordinator
Diana Marquez	Technical Lead	BMcD	816-822-3453	dmarque@burnsmcd.com	Technical Lead

Comments/Decisions: Summary of the project tasks and iterative approach was discussed. The scope of investigation was limited to OU-1, and buildings within the footprint of the 100 µg/L chlorinated solvent groundwater plume. Vanessa Bauders was identified as the USACE-CENWK technical lead. Data submittals and interim data reports were discussed. Jerry Montgomery will be the point-of-contact for database / data management issues.

Action Items:

- Update project schedule to accommodate Restoration Advisory Board (RAB) review
- Meet to further discuss indoor air approach in early May

Consensus Decisions:

- Work Plan and Sampling and Analysis Plan can be consolidated into one document (WP/SAP).
- Field work will be conducted by personnel with experience in indoor air sampling (Certified Industrial Hygienist is not required.)
- Interim data reports will be submitted as Draft and Final. These will not require regulatory or RAB review.
- Staged Electronic Data Deliverable (SEDD) will be used as the electronic data reporting format.

QAPP Worksheet #9-2 April 20, 2006 Scoping Meeting

Project Name: Vapor Intrusion Investigation **Projected Date(s) of Sampling:** August 2006 and Winter 2006 **Project Manager:** Robyn Kiefer, USACE	**Site Name:** OU-1, Former Schilling Air Force Base **Site Location:** Salina, Kansas

Date of Session: April 20, 2006
Scoping Session Purpose: Schilling Vapor Intrusion Teleconference

Name	Title	Affiliation	Phone #	E-mail Address	Project Role
Kirk Boese	Project Engineer	USACE	816-389-3558	kirk.d.boese@usace.army.mil	Project Engineer
Vanessa Bauders	Industrial Hygienist	USACE	816-389-3567	vanessa.j.bauders@usace.army.mil	Technical Lead
John Logigian	Project Manager	MP	914-641-2690	jlogigian@pirnie.com	Project Manager
Tracy Cooley	Project Manager	BMcD	816-822-3369	tcooley@burnsmcd.com	Project Manager
Ed Lindgren	QC Coordinator	BMcD	816-822-3595	elindgren@burnsmcd.com	Project QC Coordinator
Diana Marquez	Technical Lead	BMcD	816-822-3453	dmarque@burnsmcd.com	Technical Lead

Comments/Decisions: Changes were made to the project scope of work (see below). A meeting to discuss development for the Work Plan was scheduled.

Action Items:

- Project schedule will be updated based on change in scope.
- A revised cost will be provided due to the change in scope for the vapor intrusion investigation
- Meet to further discuss indoor air approach in early May.

Consensus Decisions:

- The soil gas component of the vapor intrusion investigation will be removed from the scope of work. Instead, sub-slab soil vapor sampling will be conducted in all buildings. Changes were made since the KDHE is not fully accepting of soil gas data for vapor intrusion evaluations.
- Up to two samples will be collected from each of 13 buildings and quality control (QC) samples will be collected at 10 percent of the total samples collected. The WP/SAP will provide proposed locations.
- The full TO-15 analyte list will be reported for the sub-slab soil vapor sampling.
- Work Plan discussion meeting was scheduled for May 11, 2006.

QAPP Worksheet #9-3 May 1, 2006 Scoping Meeting

Project Name: Vapor Intrusion Investigation **Projected Date(s) of Sampling:** August 2006 and Winter 2006 **Project Manager:** Robyn Kiefer, USACE	**Site Name:** OU-1, Former Schilling Air Force Base **Site Location:** Salina, Kansas

Date of Session: May 1, 2006
Scoping Session Purpose: Draft Schedule Review Teleconference

Name	Title	Affiliation	Phone #	E-mail Address	Project Role
Kirk Boese	Project Engineer	USACE	816-389-3558	kirk.d.boese@usace.army.mil	Project Engineer
Vanessa Bauders	Industrial Hygienist	USACE	816-389-3567	vanessa.j.bauders@usace.army.mil	Technical Lead
John Logigian	Project Manager	MP	914-641-2690	jlogigian@pirnie.com	Project Manager
Tracy Cooley	Project Manager	BMcD	816-822-3369	tcooley@burnsmcd.com	Project Manager

Comments/Decisions: Project schedule was discussed.

Action Items:
- Project schedule will be updated as discussed in teleconference.

Consensus Decisions:
- Pre-Draft Work Plan to be submitted to May 19, 2006.
- Add Center for Expertise (CX) to Corps reviewers.
- Change time allowed for incorporation of comments into draft or pre-draft submittals to 10 days.
- Reduce time for Indoor Air Event to 15 days.

QAPP Worksheet #9-4 May 11, 2006 Scoping Meeting

Project Name: Vapor Intrusion Investigation **Projected Date(s) of Sampling:** August 2006 and Winter 2006 **Project Manager:** Robyn Kiefer, USACE	**Site Name:** OU-1, Former Schilling Air Force Base **Site Location:** Salina, Kansas

Date of Session: May 11, 2006
Scoping Session Purpose: Vapor Intrusion Work Plan Working Meeting

Name	Title	Affiliation	Phone #	E-mail Address	Project Role
Robyn Kiefer	Project Manager	USACE	816-389-3615	robyn.v.kiefer@usace.army.mil	Project Manager
Kirk Boese	Project Engineer	USACE	816-389-3558	kirk.d.boese@usace.army.mil	Project Engineer
Charles Colbert	Industrial Hygienist	USACE	816-389-3895	charles.r.colbert@usace.army.mil	Industrial Hygienist
Amy Darpinian	Chemist	USACE	816-389-3897	amy.f.darpinian @usace.army.mil	Project Chemist
Vanessa Bauders	Industrial Hygienist	USACE	816-389-3567	vanessa.j.bauders@usace.army.mil	Technical Lead
David Daniel	Risk Assessor	USACE	816-389-3910	david.r.daniel@usace.army.mil	Risk Assessor
John Logigian	Project Manager	MP	914-641-2690	jlogigian@pirnie.com	Project Manager
Richard Califano	Risk Assessor	MP	201-388-4307	rcalifano@pirnie.com	Risk Assessor
Hope Nemickas	Risk Assessor	MP	201-398-4356	hnemickas@pirnie.com	Risk Assessor
Tracy Cooley	Project Manager	BMcD	816-822-3369	tcooley@burnsmcd.com	Project Manager
Ed Lindgren	QC Coordinator	BMcD	816-822-3595	elindgren@burnsmcd.com	Project QC Coordinator
Diana Marquez	Technical Lead	BMcD	816-822-3453	dmarque@burnsmcd.com	Technical Lead
Sharon Shelton	Chemist	BMcD	816-822-3168	sshelton@burnsmcd.com	Project Chemist

Comments/Decisions: Elements of sub-slab sampling were discussed, including: review of building/sampling locations, standard operating procedures, and leak testing procedures. Elements of indoor air sampling were discussed, including: decision criteria for indoor air sampling and standard operating procedures. Differences in pressure gauges used in the field versus laboratory were discussed. Selection of quality assurance (QA) split sample laboratory was discussed. Questions regarding QAPP content were addressed.

Action Items:

- Dave Daniel will supply Diana Marquez with USACE's screening criteria.
- Vanessa Bauders will check on identity of two smaller buildings on figure (i.e., potential pump house and concession stand). Unless otherwise instructed, BMcD will assume these buildings do not need to be sampled.
- Pre-Draft Work Plan and QAPP to be submitted May 19, 2006.
- Robyn Kiefer will contact the Dean of Kansas State University to determine if they have any input regarding placement of sampling probes within their buildings.
- The analytical laboratory will be asked if they can provide information regarding accuracy and limits of error for the field pressure gauges and laboratory gauges.
- The analytical laboratory will be asked to provide results for recent performance evaluation testing.

QAPP Worksheet #9-4 May 11, 2006 Scoping Meeting (continued)

Consensus Decisions:

- Unless instructed at a later time, assume that the pump house and concession stand do not require sampling.
- Two sub-slab soil vapor samples will be located within large buildings. If the building bridges an isoconcentration contour, sample locations will be placed on either side of the line.
- An indoor air survey form will be used to gain information regarding building use at the time of sample collection.
- Sub-slab sample ports will be established as permanent sample points that can be abandoned at a later date.
- Both mechanical and chemical leak tests will be conducted during sub-slab soil vapor sampling. Isopropyl alcohol soaked rags will be used for the chemical leak test.
- Decision criteria were established as follows: Results of sub-slab samples will be compared to 1E-05 risk-based screening criteria. The screening levels for sub-slab sampling will be based upon indoor air values multiplied by a 10-fold attenuation factor. Locations with constituents detected in excess of the attenuated 1E-05 screening criteria will be selected for indoor air sampling. Indoor air samples with detections of constituents in excess of a 1E-04 risk-based screening criteria will be the basis for further risk-management decision-making.
- Include discussion of differences in field versus laboratory pressure gauges in QAPP and WP/SAP.
- QA split samples will be submitted to DataChem in Salt Lake City, Utah. USACE-CENWK will make arrangement for these samples.
- Electronic data deliverables will be submitted in SEDD 2a format.
- Controlled copies of the QAPP with unique document control numbers will be submitted to USACE-CENWK, MP, BMcD, KDHE, USEPA, and Columbia.
- In lieu of project-specific performance evaluation samples, a copy of the lab's most recent proficiency testing results will be provided.
- Steps IIa and IIb validation will be provided in a Quality Control Summary Report (QCSR) or similar. Results of Step III usability assessment will be presented with the Vapor Intrusion Report.

QAPP Worksheet #9-5 May 16, 2006 Scoping Meeting

Project Name: Vapor Intrusion Investigation **Projected Date(s) of Sampling:** August 2006 and Winter 2006 **Project Manager:** Robyn Kiefer, USACE	**Site Name:** OU-1, Former Schilling Air Force Base **Site Location:** Salina, Kansas

Date of Session: May 16, 2006
Scoping Session Purpose: Telephone Call Between Technical Leads – Building Locations

Name	Title	Affiliation	Phone #	E-mail Address	Project Role
Vanessa Bauders	Industrial Hygienist	USACE	816-389-3567	vanessa.j.bauders@usace.army.mil	Technical Lead
Diana Marquez	Technical Lead	BMcD	816-822-3453	dmarque@burnsmcd.com	Technical Lead

BMcD = Burns & McDonnell Engineering Company, Inc.
USACE = U.S. Army Corps of Engineers

Comments/Decisions: Sampling locations were discussed on the north side of OU-1.

Action Items:

- Pump House and Concession Stand will not be included in sampling plan for OU-1.
- USACE-CENWK will attempt to obtain as-built drawings for the Kansas State buildings.

Consensus Decisions:

- Two small buildings identified as a Pump House and Concession Stand do not need to be included in the sampling design for OU-1.
- As-built drawings should be available for the newer Kansas State buildings, but may be difficult to obtain for the older buildings.

* * * * *

QAPP Worksheet #10
(UFP-QAPP Manual Section 2.5.2)
Problem Definition

PROBLEM DEFINITION, SITE HISTORY, AND BACKGROUND

A site history and description is provided in the introduction to this QAPP.

Past investigations have revealed the presence of VOCs in groundwater. The primary constituents of interest at the former Schilling AFB Site are TCE and its associated degradation products, cis-1,2-DCE and vinyl chloride, as well as carbon tetrachloride. The presence of structures directly above the VOC-impacted groundwater creates potential for vapor intrusion. The purpose of this vapor intrusion investigation is to assess potential human exposure associated with the vapor intrusion pathway for most of the occupied structures at OU-1 that are located wholly or partially within the 100 μg/L total chlorinated solvents groundwater plume (See WP/SAP Figure 1-2).

Sub-slab soil vapor and indoor air samples will be collected and analyzed for VOCs in support of this investigation. The investigation will be conducted in an iterative approach, with activities performed during Phase 2 dependent upon the outcome of Phase 1 sampling and analysis. The sub-slab soil vapor sampling will occur during Phase 1. Analytical results from the sub-slab soil vapor samples will be compared to the sub-slab soil vapor screening level provided on WP/SAP Table 2-1. During Phase 2, indoor air samples will be collected from buildings where one or more sub-slab soil vapor samples exhibited VOC concentrations exceeding the sub-slab screening level. These indoor air samples will be analyzed for only those chemicals that were detected above screening levels during the sub-slab soil vapor sampling. Sampling methodology and potential analytical requirements for the indoor air sampling activities are presented in the WP/SAP and QAPP; however an addendum to the work plan that specifies the sample number, locations, and exact analytical requirements will be submitted upon USACE-CENWK's review and the data and approval of the interim data report.

The problem to be addressed by the project:

A chlorinated solvent plume in groundwater has been identified as OU-1, and the presence of occupied or potentially-occupied structures directly above VOC-impacted groundwater creates potential for vapor intrusion.

The environmental questions being asked:

Are VOCs in groundwater migrating into indoor air? If so, do the vapors result in human exposure?

Observations from any site reconnaissance reports:

The presence of VOCs in groundwater has been identified at OU-1. The location of the plume is presented on WP/SAP Figure 1-2. An overlay is provided of buildings that are located within the footprint of the plume.

A synopsis of secondary data or information from site reports:

Groundwater data and associated isoconcentration contour maps from the *Final Remedial Investigation for Operable Unit One at the Former Schilling Air Force Base, Salina, Kansas* (USACE, 2005) were used to develop sub-slab soil vapor sampling locations (See WP/SAP Figure 1-2).

The possible classes of contaminants and the affected matrices:

Sub-slab soil vapors and indoor air and the media of concern. VOCs are the class of contaminants under investigation. The primary VOCs of interest at OU-1 for the former Schilling AFB are TCE and its associated degradation products, cis-1,2-DCE and vinyl chloride, as well as carbon tetrachloride.

The rationale for inclusion of chemical and nonchemical analyses:

The overall rationale for the phased evaluation of vapor intrusion is presented in WP/SAP Section 3.1. Analysis of VOCs in air using USEPA TO-15 will provide an indication of potential vapor migration into the buildings.

Information concerning various environmental indicators:

The presence of VOCs in groundwater underneath buildings located in OU-1 indicates the potential for intrusion of vapors into the indoor environment.

Project Decision Conditions ("If. . ., then. . ." statements):

The purpose of this vapor intrusion investigation is to assess the potential for human exposure associated with the vapor intrusion pathway for most of the occupied structures at OU-1 that are located wholly or partially within the 100 μg/L total chlorinated solvents groundwater plume as defined in the *Final Remedial Investigation for Operable Unit One at the Former Schilling Air Force Base, Salina, Kansas* (USACE-CENWK, 2005). The portion of OU-1 containing the 100 μg/L total chlorinated solvents groundwater plume is identified on WP/SAP Figure 1-2. This study likely constitutes the beginning of vapor intrusion studies at the former Schilling AFB. The 100 μg/L total chlorinated solvents groundwater plume was selected as the initial study area due to elevated chemical concentrations in groundwater rendering indoor air contamination more likely to be detected.

Decision Point 1: If a building is located within the 100 µg/L footprint of the VOC plume, then sub-slab soil vapor samples will be collected from inside the building. Two buildings that are located within the 100 µg/L contour line, the Tullis Building (Former Department of Defense [DOD] 849) and the Aeronautical Center (Former DOD 730), are not being addressed in this investigation. KDHE recently installed a sub-slab vapor mitigation system at the Tullis Building, and a sub-slab venting system had previously been installed at the Aeronautical Center. Penetrating the floor slab, as would be required to collect sub-slab soil vapor samples, could adversely impact the effectiveness of the existing mitigation systems; therefore, these two buildings were excluded from the vapor intrusion investigation.

Results of the sub-slab soil vapor data will serve as the basis for identifying buildings where indoor air samples will be collected. Analytical results from the sub-slab soil vapor samples will be compared to the sub-slab soil vapor screening levels provided on WP/SAP Table 2-1. Discussion of the development of the sub-slab soil vapor screening levels is provided in WP/SAP Section 2.2.3 and WP/SAP Appendix B. Indoor air samples will be collected from buildings where one or more sub-slab soil vapor samples showed chemical concentrations exceeding the sub-slab screening levels.

Decision Point 2: If one of more sub-slab soil vapor samples exhibit chemical concentrations exceeding the sub-slab soil vapor screening levels for a given building, then indoor air samples will be collected from inside the building.

Data will be evaluated based upon direct comparison of the laboratory results to the screening criteria. Due to the high degree of scrutiny regarding this project, provision is not being made for discounting data points that only slightly exceed screening criteria. Data are being reviewed on a per-building basis. Given the small number of samples collected per building, a statistical data analysis is not feasible.

* * * * *

QAPP Worksheet #11
(UFP-QAPP Manual Section 2.6.1)
Project Quality Objectives / Systematic Planning Process Statements

PQOs define the type, quantity, and quality of data that are needed to answer questions and support environmental decision-making. PQOs are presented as both qualitative and quantitative statements.

Who will use the data?

USACE-CENWK is performing the data analysis and interpretation. Other data users include project team members from MP, BMcD, KDHE, USEPA, and SAA.

What will the data be used for?

USACE-CENWK will use the data gathered during the vapor intrusion investigation to assess the potential human exposure associated with the vapor intrusion pathway for most of the occupied structures that are located wholly or partially within the 100 µg/L contour line for total chlorinated solvents in groundwater shown on WP/SAP Figure 1-2. A total of 13 buildings are located within this footprint; however, samples will be collected from only 11 of these buildings. Two buildings that are located within the 100 µg/L contour line, the Tullis Building (Former Department of Defense [DOD] 849) and the Aeronautical Center (Former DOD 730), are not being addressed in this investigation. KDHE recently installed a sub-slab vapor mitigation system at the Tullis Building, and a sub-slab venting system had previously been installed at the Aeronautical Center. Penetrating the floor slab, as would be required to collect sub-slab soil vapor samples, could adversely impact the effectiveness of the existing mitigation systems; therefore, these two buildings were excluded from the vapor intrusion investigation.

What type of data are needed?

Data needs for the project include the collection of sub-slab soil vapor and indoor air samples. The sample collection process (i.e., investigation) will be conducted in phases with the results of Phase 1 determining the data collection effort for Phase 2. Activities to meet the data needs during Phase 1 include:

- Completion of a building survey to document general building structural and use information (See WP/SAP Section 3.2.2).
- Installation of sub-slab soil vapor sampling probes in 11 buildings located wholly or partially within the footprint of the 100 µg/L total chlorinated solvents groundwater plume (See WP/SAP Section 3.2.3, WP/SAP Table 3-1 and WP/SAP Figure 1-2).

- Collection of sub-slab soil vapor samples in September 2006 (See WP/SAP Section 3.2.4)

- Analysis of sub-slab soil vapor samples for VOCs using USEPA Method TO-15 by Columbia for the list of compounds indicated on Table 11-1.

The exact scope of work for the Phase 2 field activities will be based on the results of the sub-slab vapor sampling activities as previously discussed. For this reason, specific information identifying the number of indoor air samples to be collected or sample locations will be determined at a later time. Sampling methodology and analytical requirements for the indoor air sampling activities are presented in the WP/SAP; however, an addendum to the WP/SAP that specifies sample number and locations will be submitted following analysis of the sub-slab soil vapor data. Data needs to be addressed during Phase 2 include:

- Completion of an indoor air sampling survey to document general building structural, use, and activities that could generate VOCs (See WP/SAP Section 3.3.2).

- Initial collection of indoor air samples only during the winter months from buildings that exhibited sub-slab soil vapor concentrations in excess of the screening value presented in WP/SAP Table 2-1.

- At this point in time it is planned that the indoor air samples will be analyzed by USEPA Method TO-15. Information is only needed for constituents detected at concentrations exceeding the sub-slab soil vapor screening levels (WP/SAP Table 2-1); therefore, analysis will only be performed for only those constituents exceeding the sub-slab soil vapor screening levels. If review of the sub-slab soil vapor data indicates that the analyte list will include chemicals for which Method TO-15 does not provide adequate quantitation limits (QLs), the analytical method may be changed to USEPA Method TO-15 SIM (selective ion monitoring) to achieve lower QLs. The final determination of the indoor air analyte list and analytical method will be addressed in a letter addendum to the WP/SAP that will be provided to USACE-CENWK prior to initiating field activities.

Matrix?

Sub-slab soil vapor and indoor air are the matrices of interest.

How "good" do the data need to be in order to support the environmental decision?

Data are being collected to assess the potential for human exposure regarding the vapor intrusion pathway. Worksheet #15, Reference Limits and Evaluation Table, which presents the VOCs with their associated action levels and project QL goals. In addition, Worksheet #12, Measurement Performance Criteria (MPC) Table, presents a summary of the MPC for each of the data quality indicators (DQIs) being used to evaluate precision, accuracy, representativeness, completeness, and comparability (PARCC). The QLs and MPC were reviewed and determined to be adequate to address the project decision conditions that were presented in Worksheet #10, Problem Definition.

How much data are needed?

Requirements for the sub-slab soil vapor investigation (Phase 1 Investigation) are presented in WP/SAP Section 3.2.1. WP/SAP Figure 1-2 presents the building locations, and WP/SAP Table 3-1 presents a sampling summary.

Requirements for the indoor air sampling (Phase 2 Investigation) are presented in WP/SAP Section 3.3.1. The exact number of indoor air samples to be collected during Phase 2 is unknown at this time. Sampling locations will be determined based upon the results of the Phase 1 sub-slab soil vapor samples.

Where, when, and how should the data be collected/generated?

The 11 buildings being sampled include most of the occupied structures that are located wholly or partially within the 100 μg/L contour line for total chlorinated solvents in groundwater. Two buildings that are located within the 100 μg/L contour line, the Tullis Building (Former Department of Defense [DOD] 849) and the Aeronautical Center (Former DOD 730), are not being addressed in this investigation. KDHE recently installed a sub-slab vapor mitigation system at the Tullis Building, and a sub-slab venting system had previously been installed at the Aeronautical Center. Penetrating the floor slab, as would be required to collect sub-slab soil vapor samples, could adversely impact the effectiveness of the existing mitigation systems; therefore, these two buildings were excluded from the vapor intrusion investigation. Sub-slab soil vapor samples will be collected as indicated in WP/SAP Section 3.2. Since increased soil moisture can cause the soil vapor sample results to be biased low, the sub-slab soil vapor samples will not be collected within five days of precipitation or irrigation events. The sub-slab sampling is currently planned for September 2006.

The second phase of the vapor intrusion investigation consists of collecting indoor air samples from a subset of the buildings where sub-slab soil vapor samples were collected. Indoor air samples will be

collected as indicated in WP/SAP Section 3.3. Indoor air samples will be collected in the winter months of 2006/2007.

A summary of the project schedule is presented on Worksheet #16, Project Schedule/Timeline Table.

Who will collect and generate the data?

Field sampling activities will be conducted by BMcD personnel. Sample analysis will be performed by Columbia. Analysis of the QA split samples will be provided by STL Burlington.

How will the data be reported?

Analytical data will be reported by Columbia and STL Burlington in hard copy and electronic format following each sampling event. Hard copy contents are indicated in Worksheet #29, Project Documents and Records Table. The electronic data deliverable will conform to SEDD 2a format.

WP/SAP Section 2.2 presents the project reporting requirements, including:

- DQCRs
- Monthly Progress Reports
- Interim Data Report, including a Quality Control Summary Report (QCSR) discussing data validation of the for sub-slab soil vapor data
- Vapor Intrusion Report, including a QCSR discussing the data validation of the indoor air data

How will the data be archived?

Field notebooks, chain-of-custody (COC) forms, field forms, disks, tapes, and lab reports will be filed and stored at the BMcD offices located in Kansas City, Missouri. Data provided by the analytical laboratories will be archived electronically in SEDD 2a format. After the first six months following completion of the project, these files may be transferred to long-term storage facilities located in Kansas City, Missouri or transferred to USACE-CENWK.

* * * * *

Table 11-1
Analyte List
Vapor Intrusion Investigation
Former Schilling Air Force Base

Acetone	cis-1,3-Dichloropropene
Benzene	trans-1,3-Dichloropropene
Bromodichloromethane	Ethylbenzene
Bromoform	2-Hexanone
Bromomethane	Methyl tert-butyl ether (MTBE)
2-Butanone (MEK)	Methylene Chloride
Carbon Disulfide	4-Methyl-2-pentanone (MIBK)
Carbon Tetrachloride	Styrene
Chlorobenzene	1,1,2,2-Tetrachloroethane
Chloroethane	Tetrachloroethene (PCE)
Chloroform	1,1,1-Trichloroethane
Chloromethane	1,1,2-Trichloroethane
Dibromochloromethane	Trichloroethene (TCE)
1,2-Dibromoethane	Trichlorofluoromethane (Freon 11)
1,2-Dichlorobenzene	Trichlorotrifluoroethane (Freon 113)
1,3-Dichlorobenzene	Toluene
1,4-Dichlorobenzene	Vinyl Chloride
1,1-Dichloroethane	*m,p*-Xylenes
cis-1,2-Dichloroethene	*o*-Xylene
trans-1,2-Dichloroethene	Isopropyl Alcohol
1,2-Dichloropropane	(leak test compound only applicable to the sub-slab soil vapor samples)
Note: Sub-slab soil vapor samples will be analyzed for the entire analyte list indicated. Only VOCs that were detected in the sub-slab soil vapor samples at concentrations exceeding the sub-slab soil vapor screening levels will be included on the analyte list for the indoor air sample collected at a given building.	

QAPP Worksheet #12
(UFP-QAPP Manual Section 2.6.2)
Measurement Performance Criteria Table

QAPP Worksheet #12-1 VOCs by TO-15 (Columbia)

Matrix	Sub-Slab Soil Vapor and Indoor Air
Analytical Group	VOCs by TO-15 (Columbia)
Concentration Level	Low

Sampling Procedure	Analytical Method/SOP	Data Quality Indicators (DQIs)	Measurement Performance Criteria	QC Sample and / or Activity Used to Assess Measurement Performance	QC Sample Assesses Error for Sampling (S), Analytical (A) or both (S& A)
Sub-Slab Soil Vapor WP/SAP Section 3.2 Indoor Air WP/SAP Section 3.3	Method TO-15 SOP VOA-TO15	Precision – Lab	RPD ≤ 25%	Laboratory Duplicates	A
		Precision – Field	See Figure 12-1	Field Duplicates	S & A
		Accuracy/Bias – Contamination	No target compounds > ½ QL	Method Blanks Trip Blanks	S & A
		Accuracy/Bias	70% ≤ Recovery ≤ 140%	Surrogates	A
		Accuracy/Bias	Recovery within limits specified in laboratory SOP (See Table 12-1)	Laboratory Control Sample (LCS)	A
		Sensitivity	QLs < 1/3 Action Level	See QAPP Worksheet #15	A
		Completeness – Field	Samples collected from ≥ 90% of planned locations	Data Completeness Check	S
		Completeness – Lab	Usable data provided for ≥ 95% of analyzed samples	Data validation and usability assessment	A
		Representativeness (Sub-Slab Soil Vapor)	Vacuum maintained in system	Mechanical Leak Test	S
		Representativeness (Sub-Slab Soil Vapor)	No isopropyl alcohol detections > 10% of starting concentration	Chemical Leak Test	S

Matrix	Sub-Slab Soil Vapor and Indoor Air
Analytical Group	VOCs by TO-15 (Columbia)
Concentration Level	Low

Sampling Procedure	Analytical Method/SOP	Data Quality Indicators (DQIs)	Measurement Performance Criteria	QC Sample and / or Activity Used to Assess Measurement Performance	QC Sample Assesses Error for Sampling (S), Analytical (A) or both (S& A)
		Representativeness	Samples Analyzed with Holding Time	Holding Time Review	A
		Comparability	See Figure 12-1	QA Split Sample	S & A

TABLE 12-1
LCS Acceptance Limits (Columbia)
Volatile Organic Compounds by USEPA TO-15

Vapor Intrusion Investigation
Former Schilling Air Force Base

Parameter	CAS Number	Columbia LCS Acceptance Limits (% Recovery)
Acetone	67-64-1	65 - 115
Benzene	71-43-2	68 - 126
Bromodichloromethane	75-27-4	73 - 136
Bromoform	75-25-2	76 - 136
Bromomethane	74-83-9	73 - 128
2-Butanone (MEK)	78-93-3	69 - 137
Carbon Disulfide	75-15-0	69 - 127
Carbon Tetrachloride	56-23-5	73 - 136
Chlorobenzene	108-90-7	78 - 131
Chloroethane	75-00-3	72 - 128
Chloroform	67-66-3	71 - 133
Chloromethane	74-87-3	70 - 127

TABLE 12-1
LCS Acceptance Limits (Columbia)
Volatile Organic Compounds by USEPA TO-15

Vapor Intrusion Investigation
Former Schilling Air Force Base

Parameter	CAS Number	Columbia LCS Acceptance Limits (% Recovery)
Dibromochloromethane	124-48-1	80 - 134
1,2-Dibromoethane	106-93-4	80 - 130
1,2-Dichlorobenzene	95-50-1	78 - 135
1,3-Dichlorobenzene	541-73-1	79 - 136
1,4-Dichlorobenzene	106-46-7	78 - 133
1,1-Dichloroethane	75-34-3	69 - 134
1,2-Dichloroethane	107-06-2	71 - 132
1,1-Dichloroethene	75-35-4	73 - 131
cis-1,2-Dichloroethene	156-59-2	74 - 130
trans-1,2-Dichloroethene	156-60-5	73 - 131
1,2-Dichloropropane	78-87-5	74 - 128
cis-1,3-Dichloropropene	10061-01-5	76 - 132
trans-1,3-Dichloropropene	10061-02-6	76 - 134
Ethylbenzene	100-41-4	79 - 130
2-Hexanone	591-78-6	69 - 143
Methyl tert-Butyl Ether	1634-04-4	55 - 142
Methylene chloride	75-09-2	67 - 123
4-Methyl-2-pentanone (MIBK)	108-10-1	75 - 137
Styrene	100-42-5	73 - 135
1,1,2,2-Tetrachloroethane	79-34-5	81 - 131
Tetrachloroethene (PCE)	127-18-4	78 - 130
1,1,1-Trichloroethane	71-55-6	74 - 133
1,1,2-Trichloroethane	79-00-5	74 - 129
Trichloroethene (TCE)	79-01-6	73 - 132
Trichlorofluoromethane (Freon 11)	75-69-4	70 - 143
Trichlorotrifluoroethane (Freon 113)	76-13-1	72 - 133

TABLE 12-1
LCS Acceptance Limits (Columbia)
Volatile Organic Compounds by USEPA TO-15

Vapor Intrusion Investigation
Former Schilling Air Force Base

Parameter	CAS Number	Columbia LCS Acceptance Limits (% Recovery)
Toluene	108-88-3	79 - 128
Vinyl Acetate	108-05-4	58 - 165
Vinyl Chloride	75-01-4	71 - 131
m,p-Xylenes	136777-61-2	80 - 131
o-Xylene	95-47-6	80 - 131

QAPP Worksheet #12-2 VOCs by TO-15 (STL Burlington)

Matrix	Sub-Slab Soil Vapor and Indoor Air
Analytical Group	VOCs by TO-15 (STL Burlington)
Concentration Level	Low

Sampling Procedure	Analytical Method/SOP	Data Quality Indicators (DQIs)	Measurement Performance Criteria	QC Sample and / or Activity Used to Assess Measurement Performance	QC Sample Assesses Error for Sampling (S), Analytical (A) or both (S& A)
Sub-Slab Soil Vapor WP/SAP Section 3.2 Indoor Air WP/SAP Section 3.3	Method TO-15 LM-AT-TO14/TO15	Precision – Lab	RPD ≤ 25%	Laboratory Duplicates	A
		Precision – Field	See Figure 12-1	Field Duplicates	S & A
		Accuracy/Bias – Contamination	No target compounds > ½ QL	Method Blanks Trip blanks	S & A
		Accuracy/Bias	±40% of the mean internal standard response of the CCV	Internal Standards	A
		Accuracy/Bias	70% ≤ Recovery ≤ 130%	Laboratory Control Sample	A
		Sensitivity	QLs < 1/3 Action Level	See QAPP Worksheet #15	A
		Representativeness	Samples Analyzed with Holding Time	Holding Time Review	A
		Representativeness (Sub-Slab Soil Vapor)	Vacuum maintained in system	Mechanical Leak Test	S
		Representativeness (Sub-Slab Soil Vapor)	No isopropyl alcohol detections > 10% of starting concentration	Chemical Leak Test	S
		Completeness – Field	Samples collected from ≥ 90% of planned locations	Data Completeness Check	S
		Completeness – Lab	Usable data provided for ≥ 95% of analyzed samples	Data validation and usability assessment	A
		Comparability	See Figure 12-1	QA Split Sample	S & A

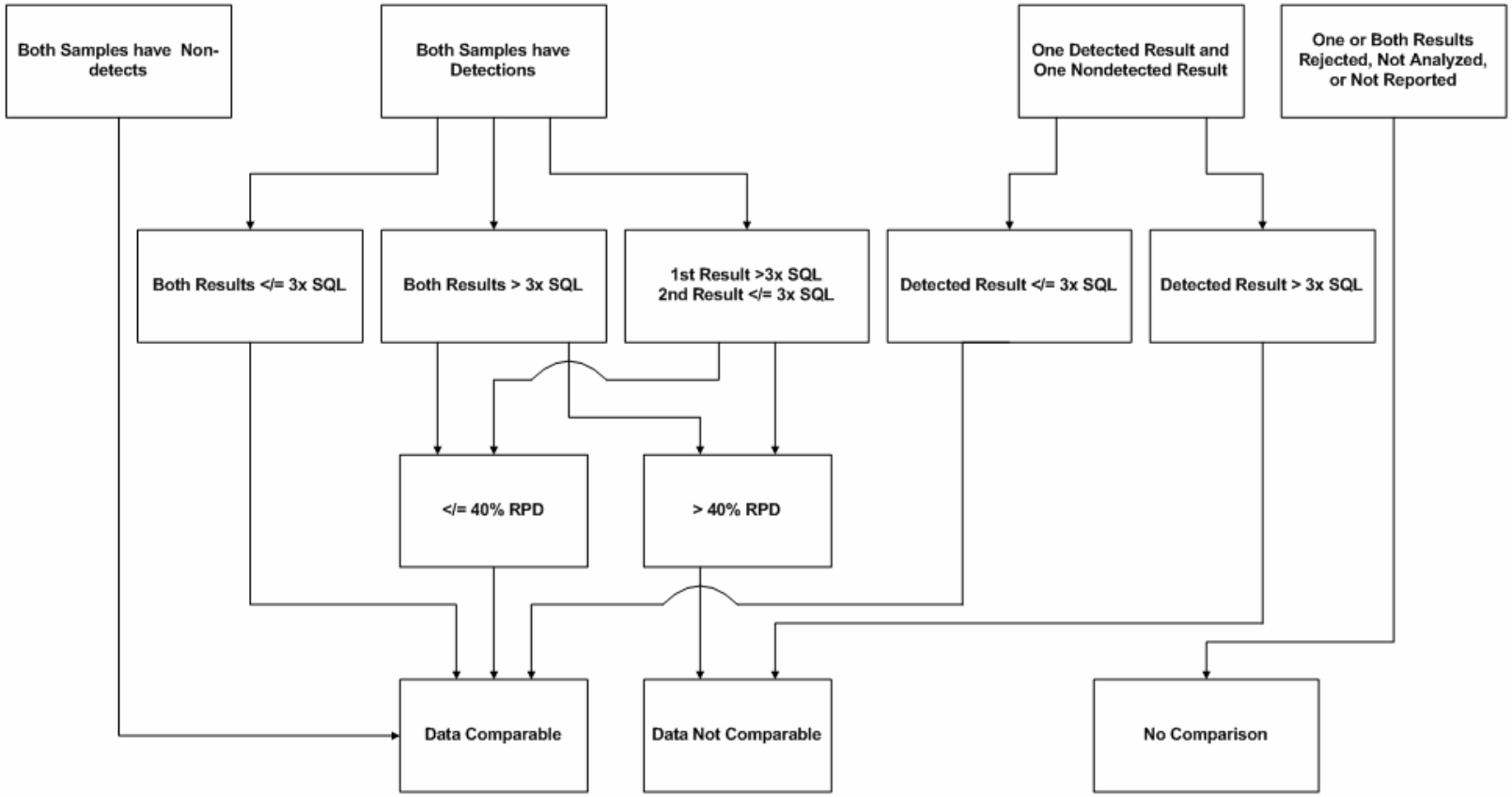

LEGEND

RPD = Relative Percent Difference

SQL = Sample Quantitation Limit

See QAPP Worksheet #12

7/29/99 k:\human.vsd

Burns & McDonnell
SINCE 1898

Figure 12-1
QA and Field Duplicate Sample Comparison
Former Schilling Air Force Base
Salina, Kansas

MEASUREMENT PERFORMANCE CRITERIA

MPC have been determined for the sub-slab soil vapor and indoor air samples. The criteria pertain to DQIs of precision, accuracy/bias, sensitivity, representativeness, comparability, and completeness. The DQIs provide an indication of the quantitative and qualitative degree of data quality. These MPCs were developed based upon the PQOs, including applicable screening levels (see WP/SAP Table 2-1). Any laboratory-derived performance criteria were reviewed for appropriateness relative to the PQOs and were found to be acceptable. Further discussion regarding the review of the laboratory-derived criteria is presented with each of the applicable QC samples in the following sections. It is important to note that the DoD QSM has not developed specific MPC for air analysis using USEPA Method TO-15. Discussion regarding the DQIs, QC samples, control limits for each indicator, and potential corrective actions for outliers are provided in the following sections.

Precision

Precision is the level of agreement among individual measurements of the same chemical or physical property. During the data validation process, precision is expressed in terms of relative percent difference (RPD). Chemical concentration data obtained from the analysis of laboratory duplicate and field duplicate samples will be compared to evaluate analytical precision. The RPD is calculated using the following equation:

$$RPD = \frac{|(D_1 - D_2)|}{(D_1 + D_2)/2} \times 100$$

Where:

RPD = Relative Percent Difference
D_1 = Original Sample Concentration
D_2 = Duplicate Sample Concentration

Perfect precision would be indicated by a RPD of 0 percent.

Laboratory Duplicates

Laboratory duplicates are performed to assess analytical precision. USEPA Method TO-15 specifies the analysis of a laboratory duplicate in each sample batch, with a sample batch defined as a grouping of up to 20 field samples. Therefore, the laboratories will analyze a field sample and duplicate sample that are obtained from the same container for each analytical batch. The samples are handled, prepared, and analyzed at the lab using identical techniques.

Columbia's and STL Burlington's acceptance criteria for laboratory duplicates are a maximum RPD of 25 percent for each compound, which was found to be acceptable for purposes of this investigation. This

value corresponds to duplicate sample acceptance criteria that were established in USEPA Method TO-15 based upon studies performed for USEPA's Urban Air Toxics Monitoring Program and Toxics Air Monitoring Stations. In addition, this acceptance criterion was more restrictive than default duplicate sample comparison criterion (RPD ≤ 30 percent) that was established for GC/MS analysis in Table B-3 of the DoD QSM (DoD, 2006).

Any RPD outside of control limits for the lab duplicate requires evaluation by the lab. Columbia's SOP VOA-TO15 specifies that a second laboratory duplicate should be analyzed in the event of failure to meet the RPD criteria. In the event that the secondary analysis is also outside of QC limits, the data will be flagged during data validation (See QAPP Worksheets #35 and #36). Similar corrective action is required from STL Burlington.

Field Duplicates

Field duplicate sample results will indicate the precision and reproducibility of sample collection and analytical results. A field duplicate sample is obtained for the sub-slab soil vapor and indoor air samples as indicated in Sections 3.2 and 3.3 of the WP/SAP. The project goal is to collect a minimum of 10 percent duplicate samples during the sampling events. The field duplicate samples will be collected in the same manner and analyzed for the same parameters as field samples from the same location. The acceptance criteria for field duplicates are specified on Figure 12-1.

It should be noted that field duplicate samples are expected to have greater variability than lab duplicates. Figure 12-1 is based upon a data comparison flow diagram (Figure 16) that is presented in the UFP-QAPP Manual for comparison of aqueous samples. The numerical criteria presented in Figure 12-1 were selected based upon review of water/soil replicate sample comparison criteria that were established in *Chemical Quality Assurance for Hazardous, Toxic and Radioactive (HTRW) Projects* (USACE, 1997). The numerical criteria presented in this document were adjusted based upon this project's sample matrix (air) and laboratory duplicate acceptance criteria (RPD ≤ 25 percent). The RPD criteria indicated in Figure 12-1 are more restrictive than acceptance criteria presented in the USACE document, and these criteria provide adequate precision for purposes of this investigation.

Any result outside of acceptance criteria for the field duplicate requires evaluation. The sample collection method should be verified to determine likely sources of sample non-homogeneity. Additionally, the calculations should be checked for errors and corrected when necessary. If no calculation errors occurred, then the laboratory should be contacted and requested to verify their results. Additionally, any information the laboratory can give regarding apparent homogeneity of the sample within the sample container should be obtained. If analytical holding times have not been exceeded and sufficient sample

volume remains, it may be beneficial to have the laboratory repeat the sample analysis in instances where the field duplicate results are significantly outside of control limits (i.e., RPDs that exceed control limits by more than 50 percent). In some instances, the corrective action will involve flagging the data during data validation (See QAPP Worksheets #35 and #36) or rejection of the results for the original and duplicate sample.

QA Split Samples

QA split sample results will also indicate the precision and reproducibility of sample collection and analytical results. A QA split sample is obtained for the sub-slab soil vapor and indoor air samples as indicated in Sections 3.2 and 3.3 of the WP/SAP. QA split sampling is performed by collecting two samples from a given location. One sample is submitted to the primary analytical laboratory, and the second sample is submitted to a different laboratory for analysis. Results of the two samples are then compared. The project goal is to collect a minimum of 10 percent QA split samples during the sampling events. The QA split samples will be collected in the same manner and analyzed for the same parameters as the primary sample from the same location. The acceptance criteria for QA split samples are specified on Figure 12-1.

It should be noted that QA split samples are expected to have greater variability than lab duplicates. Figure 12-1 is based upon a data comparison flow diagram (Figure 16) that is presented in the UFP-QAPP Manual for comparison of aqueous samples. The numerical criteria presented in Figure 12-1 were selected based upon review of water/soil replicate sample comparison criteria that were established in *Chemical Quality Assurance for Hazardous, Toxic and Radioactive (HTRW) Projects* (USACE, 1997). The numerical criteria presented in this document were adjusted based upon this project's sample matrix (air) and laboratory duplicate acceptance criteria (RPD $\leq$ 25 percent). The RPD criteria indicated in Figure 12-1 are more restrictive than acceptance criteria presented in the USACE document, and these criteria provide adequate precision for purposes of this investigation.

Any result outside of acceptance criteria for the QA split samples requires evaluation. The sample collection method should be verified to determine likely sources of sample non-homogeneity. Additionally, the calculations should be checked for errors and corrected when necessary. If no calculation errors occurred, then the laboratories should be contacted and requested to verify their results. Additionally, any information the laboratories can give regarding apparent homogeneity of the sample within the sample container should be obtained. If analytical holding times have not been exceeded and sufficient sample volume remains, it may be beneficial to have the laboratories repeat the sample analysis in instances where the QA split sample results are significantly outside of control limits (i.e., RPDs that

exceed control limits by more than 50 percent). In some instances, the corrective action will involve flagging the data during data validation (See QAPP Worksheets #35 and #36) or rejection of the results for the original and QA split sample.

Accuracy/Bias

Accuracy measures the bias of a measurement system and may be defined as the degree of agreement between a measurement and its accepted or true value. The accuracy of chemical results is assessed by examining the results of blank samples and spike recovery studies.

Blank Samples

Blank results are used to evaluate whether field or laboratory handling may have contaminated samples and adversely impacted analytical accuracy by causing false positive or high-biased data. The results of these analyses allow an evaluation of whether detections may represent chemicals introduced into the samples during handling, sample shipment, or analytical preparation and analysis.

Blanks are expected to have no detections of target constituents. Any blank detection that is greater than one-half (1/2) of the constituent's QL requires evaluation to determine whether sample reanalysis is necessary. Any exception is made for common lab contaminants (acetone, methylene chloride, etc.). For these compounds, the blank concentration should not exceed the QL. Any sample associated with a blank that fail these criteria shall be reprocessed in a subsequent preparation blank, except when the sample analysis results in a non-detect result for the contaminant. If no sample volume remains for reprocessing, then the results will be reported with appropriate data qualifiers. Results in field samples that are less than five times the corresponding contaminated blank value are generally considered false positives and flagged accordingly during data validation (See Appendix E). Instances of gross contamination may require reanalysis and/or resampling if the corresponding field samples have similar detections.

Method Blanks

USEPA Method TO-15 specifies the analysis of a method blank in each sample batch, with a sample batch defined as a grouping of up to 20 field samples. For the method blank, a clean matrix is prepared and analyzed in the same manner as the field samples. Any detection in the method blank indicates potential laboratory contamination of the associated field samples in the analytical batch.

Trip Blanks

The laboratory prepares trip blanks and sends them to the field along with the containers for sample collection. A trip blank, consisting of an unopened evacuated canister, will be shipped with the sub-slab vapor samples on each day of sampling. Trip blanks can consist of either unopened, fully evacuated canisters or canisters that have been fully charged with zero grade air by the laboratory. Since a fully

charged canister has no vacuum with which to pull contaminants into the canister, a fully evacuated canister has a better likelihood of capturing potential transit-related contamination. Trip blanks are used to determine if VOCs diffused through the sample canister fittings due to site, shipping, or laboratory conditions; thereby, causing cross-contamination of samples.

Spike Recovery Studies

Spike recovery studies are used to evaluate the ability of the laboratory to recover constituents that are intentionally spiked into the samples. Accuracy of spiked samples is expressed as the percent recovery (REC). The REC is calculated using the following equation.

$$REC = \frac{(SSR - SR)}{SA}$$

Where:

REC = Recovery
SSR = Spiked Sample Result
SR = Sample Result
SA = Spike Amount Added

Perfect accuracy is defined as 100 percent REC. The DoD QSM has not established accuracy limits for the analysis of air using USEPA TO-15. The laboratories have established statistically-derived acceptance limits (Columbia) or are utilizing default limits presented in USEPA Method TO-15 (STL Burlington). These limits were reviewed and found to be adequate to meet PQOs. Further discussion regarding the review of the laboratory-derived criteria is presented with each of the applicable QC samples in the following sections. An elevated REC indicates potential for or high bias in the data; therefore, non-detect results would be considered reliable. A low REC indicates potential for low bias in the data. Instances of significantly low REC (i.e., REC less than 10 percent), indicate the possibility of false negative results.

Surrogates

Surrogates are added to each sample that undergoes organic analyses. Surrogates are compounds that are not normally found in environmental samples that are added (spiked) into field and QC samples and analyzed for REC. Surrogates are utilized to give an indication of the analytical accuracy of the preparation and analysis methods on a per sample basis.

Surrogate spikes are not required as part of USEPA Method TO-15. Columbia performs surrogate spiking as requested on a per-project basis and surrogate analysis is being requested for this project. VOCs included as surrogate spikes include: 1,2-dichloroethane-d_4, toluene-d_8, and bromofluorobenzene.

Columbia's acceptance criteria for surrogates are RECs between 70 to 140 percent. Since method-specified acceptance criteria and DoD QSM criteria were not available for surrogate review, Columbia's acceptance limits were compared to guidelines presented in the *Kansas City District Data Quality Evaluation Guidance* (USACE-CENWK, 2006), which is presented in Appendix E. This guidance establishes control limits of 60 to 140 percent for purge and trap analyses. Columbia's limits fell within these guidelines and were determined to be acceptable for purposes of this project.

Any surrogate REC outside of control limits requires evaluation by the lab. At a minimum, calculations should be checked for errors and corrected when necessary. If no calculation errors occurred, instrument performance should be verified. If an instrument problem is found, it should be corrected and the samples reanalyzed. If no instrument problem is found, then the sample should be reanalyzed, as applicable, according to method requirements. Columbia's SOP VOA-TO15 specifies that a smaller sample aliquot should be reanalyzed to mitigate any matrix interference. In the event that the secondary analysis is also outside of QC limits, the data will be flagged during data validation (See QAPP Worksheets #35 and #36).

Laboratory Control Sample (LCS)

USEPA TO-15 specifies the analysis of a LCS in each sample batch, with a sample batch defined as a grouping of up to 20 field samples. For the LCS, an interference-free matrix is spiked with known concentrations of target constituents and analyzed. The intent is to measure analytical accuracy of the method in the absence of sample matrix effects. As a measure of accuracy, the results of the LCS are compared against the known analyte concentrations in the spike to determine REC.

Columbia's acceptance criteria for LCS REC are provided on Table 12-1. These limits were statistically-derived by the laboratory. The limits were reviewed for adequacy based on comparison to USEPA Method TO-15 default limits of 70 to 130 percent, which are being used by STL Burlington. These criteria were largely achieved for the chlorinated constituents of interest (TCE, cis-1,2-DCE, vinyl chloride, and carbon tetrachloride). Deviances were noted from the method default limits for some of the VOCs. In many cases, the deviance established a more stringent lower recovery limit than that indicated in the method (i.e., lower control limit > 70 percent), and a less stringent upper recovery limit (i.e., upper control limit >130 percent). Therefore, the potential for unacceptable low bias in the data was not indicated in the review of Columbia's LCS acceptance criteria. VOCs with upper recovery limits greater than 130 percent may exhibit a higher degree of positive bias. The point of data rejection will be based upon LCS REC outside of 40 to 160 percent (or in excess of four times the standard deviation around the

mean results of control limit studies) as indicated in the *Kansas City District Data Quality Evaluation Guidance* (Appendix E).

Any LCS REC outside of control limits requires evaluation by the lab. At a minimum, calculations should be checked for errors and corrected when necessary. If no calculation errors occurred, instrument performance should be verified. If an instrument problem is found, it should be corrected and the samples reanalyzed. Depending upon the number and magnitude of compounds with LCS REC failures, corrective action may include reanalysis of only the LCS or reanalysis of all samples within the batch. For analyses with analyte lists that contain greater than 11 compounds, a limited number of sporadic marginal exceedences (MEs) are allowed in the DoD QSM prior to batch reanalysis. For the analyte list provided in Table 11-1, up to two (2) sporadic MEs are allowed. MEs must be random, and the ME control limits should not exceed four times the standard deviation around the mean results of control limit studies. In some instances, corrective action will involve flagging the data during data validation (See QAPP Worksheets #35 and #36).

Sensitivity and Quantitation Limits

Sensitivity is the ability of the method to detect target constituents at a level of interest. The QL is the minimum concentration of a constituent that can be routinely quantified by a lab. The DoD QSM uses the term Limit of Quantitation (LOQ) to describe the QL. In contrast, the method detection limit (MDL) is a statistically derived value that represents the 99 percent confidence level that the reported signal is different from a blank sample. The DoD QSM uses the term Limit of Detection (LOD) to describe the MDL. MDLs are lower values than QLs. In general, QLs should be established at least three times the MDL. Columbia and STL Burlington report detections between the MDL and QL as estimated (J-flag). QLs are often adjusted based upon sample volume and dilution. These adjusted QLs are referred to as sample quantitation limits (SQLs).

QLs and SQLs are compared to project action limits (ALs). ALs are numerical criteria that are used as decision points for the project. WP/SAP Table 2-1 presents the screening levels that are being used as ALs for the vapor intrusion project. QAPP Worksheet #15 presents a comparison of these screening levels to laboratory MDLs and QLs for adequacy. Since the QL can be adjusted depending upon various conditions, the project QL goal has been established as one-third (1/3) of the AL per the UFP-QAPP guidance.

Representativeness

Representativeness expresses the degree to which sample data accurately and precisely represents a characteristic of a population, parameter variations at a sampling point, or an environmental condition.

Representativeness is a qualitative parameter that depends upon the proper design of the sampling program and proper laboratory protocols. The following factors impact representativeness: appropriate rationale used to select sampling locations and analytical parameters, correct sample collection techniques and preservation, use of standard analytical methods, adherence to method holding times, and determination of potential analysis interferences. The representativeness of the data will be determined by:

- Qualitative comparison of actual sampling procedures to those presented in the WP/SAP and QAPP.
- Quantitative comparison of analytical results for field duplicates and/or field splits to determine parameter variation at a sampling point.
- Invalidating nonrepresentative data or identifying data to be classified as questionable through qualitative or quantitative data validation procedures.
- Performance of leak tests during sub-slab soil vapor sampling
- Review of sample analysis relative to the method holding time

Nonrepresentative or questionable data are data that do not accurately reflect site conditions. If data are determined to be nonrepresentative, they will not be used in subsequent data reduction, validation, and site characterization. If a critical data point or parameter is determined to be nonrepresentative, the need for additional data collection will be carefully assessed by the BMcD Project Manager in conjunction with MP and USACE-CENWK Project Managers.

Leak Testing

Leak testing will be performed during sub-slab soil vapor sampling to verify that the sampling train is not subject to intrusion of indoor air and is collecting a representative soil gas sample. Mechanical leak tests will be performed as indicated in WP/SAP Section 3.2.4.3. If failure is noted during the mechanical leak test, sampling activities will be discontinued until the leak can be identified and addressed.

Chemical leak tests are also conducted using isopropyl alcohol as the test compound. The sub-slab soil vapor sampling train prepared as indicated in WP/SAP Sections 3.2.4.4 and 3.4. If isopropyl alcohol is detected in the sub-slab soil vapor sample exceeds 5 percent of the starting concentration, the data will be qualified as estimated (J-flag). Data will be rejected if the isopropyl alcohol concentration in the sub-slab soil vapor sample exceeds 10 percent of the starting concentration. The starting concentration of

isopropyl alcohol will equal the average photoionization detector (PID) readings from each isopropyl alcohol-wrapped fitting in an individual assembly. Using this method, each sample location will have a sample-specific starting isopropyl alcohol concentration that will be used to determine the presence of leaks in the probe and/or sample assembly.

Comparability

Comparability is a qualitative parameter used to express the confidence with which one data set may be compared to another. The data sets may include data generated by laboratories in different phases of a project and/or data generated using different sampling and analysis techniques than those presented in the WP/SAP. Comparability of data is achieved through the use of standard methods to collect and analyze samples, and reporting results in standard units and consistent format. To produce comparable data, the units specified for analytical results obtained during the field investigations will be consistent throughout this project, and standardized analytical methods will be utilized for each parameter.

Comparability can be assessed by collection and submission of split samples to two different laboratories for analysis. QA split samples are being collected at a frequency of approximately 10 percent during the vapor intrusion investigation and will by used to assess data comparability. The QA split sampling is performed by collecting two samples from a given location. One sample is submitted to the primary analytical laboratory, and the second sample is submitted to a different laboratory for analysis. Results of the two samples are then compared. Figure 12-1 presents a flow diagram for the QA split sample comparison criteria.

Completeness

Completeness defines the percentage of measurements judged to be valid measurements. Completeness is assessed for both field and laboratory activities.

Field Completeness

Field completeness is assessed by comparing the number of samples collected to the number of samples planned for collection, as follows:

$$\% \text{ Field Completeness} = \frac{\text{Number of samples collected}}{\text{Number of samples planned}} \times 100$$

The field completeness goal for this project is 90 percent. If field completeness falls below 90 percent, the need for additional data collection to meet project objectives will be carefully assessed by the BMcD Project Manager in conjunction with MP and USACE-CENWK Project Managers.

Laboratory Completeness

Laboratory completeness is assessed by comparing the number of valid sample results to the total number of sample results. Laboratory completeness is calculated on a per method and matrix basis, as follows:

$$\% \text{ Laboratory Completeness} = \frac{\text{Number of valid results for a method}}{\text{Total number of results for a method}} \times 100$$

Valid sample results are sample results that are not qualified as rejected (R) during data validation (See QAPP Worksheets #35 and #36). The laboratory completeness goal for this project is 95 percent. If laboratory completeness falls below 95 percent, the need for additional data collection will be carefully assessed by the BMcD Project Manager in conjunction with MP and USACE-CENWK Project Managers.

* * * * *

QAPP Worksheet #13
(UFP-QAPP Manual Section 2.7)
Secondary Data Criteria and Limitations Table

This worksheet identifies all secondary data and information that will be used for the project and their originating sources. The use of the secondary data is specified as well as any limitations on their use.

Secondary Data	**Data Source** (originating organization, report title and date)	**Data Generator(s)** (originating organization, data types, data generation / collection dates)	**How Data Will Be Used**	**Limitations on Data Use**
Groundwater Data	*Final Remedial Investigation for Operable Unit One at the Former Schilling Air Force Base, Salina, Kansas* (USACE, September 2005)	USACE performed a remedial investigation for OU-1. Results for soil, groundwater, and indoor air samples were presented in this report. Various investigations were conducted from 1993 through 2004.	Groundwater data were used to generate an isoconcentration map for chlorinated VOCs. Sub-slab sampling locations were selected from buildings within the 100 µg/L contour.	Data were validated by USACE-CENWK and are acceptable for use. The groundwater plume was not completely defined in the vicinity of Tony's Road Ditch (See WP/SAP Figure 1-2).

QAPP Worksheet #14
(UFP-QAPP Manual Section 2.8.1)
Summary of Project Tasks

SAMPLING TASKS:

The vapor intrusion investigation will be conducted in a phased approach. Phase 1 will involve the collection and analysis of sub-slab soil vapor samples for VOCs. Based upon the results of the sub-slab soil vapor sampling, locations will be selected for collection of indoor air samples. Indoor air samples will be analyzed for those VOCs that were detected in the sub-slab soil vapor samples at concentrations exceeding the sub-slab soil vapor screening levels.

Sampling tasks are described in detail in WP/SAP Sections 3.2, 3.3, 3.6, and 3.7, as follows:

3.2 Sub-Slab Vapor Sampling (Phase One Investigation)
- 3.2.1 Sampling Overview and Rationale
- 3.2.2 Initial Building Survey
- 3.2.3 Sub-Slab Soil Vapor Probe Construction and Installation
- 3.2.4 Sub-Slab Sampling Procedures
- 3.2.5 Equipment Decontamination Procedures
- 3.2.6 Investigation-Derived Waste (IDW)

3.3 Indoor Air Sampling (Phase Two Investigation)
- 3.3.1 Indoor Air Sampling Overview and Rationale
- 3.3.2 Indoor Air Quality Building Survey
- 3.3.3 Indoor Air Sampling Procedures
- 3.3.4 Ambient Air Sampling
- 3.3.5 Quality Control

3.6 Sample Handling and Shipment

3.7 Sample Location Mapping

ANALYSIS TASKS:

Analysis tasks are described in WP/SAP Section 3.4, Sample Analysis and Validation. Sub-slab samples will be collected and analyzed for VOCs using USEPA Method TO-15. The TO-15 parameter list that will be used for reporting the sub-slab soil data is presented on Table 11-1. Indoor air samples will be analyzed for VOCs that were detected in the sub-slab soil vapor at concentration exceeding screening levels. At this point in time it is planned that the indoor air samples will be analyzed by USEPA Method TO-15. If review of the sub-slab soil vapor data indicates that the analyte list will include compounds for which Method TO-15 does not provide adequate QLs, the analytical method may be changed to USEPA Method TO-15SIM. The final determination of the indoor air analyte list and analytical method will be

addressed in a letter addendum to the WP/SAP that will be provided by USACE-CENWK prior to initiating field activities. The primary analytical laboratory is Columbia, and the QA laboratory is STL Burlington. Analysis methods are also presented on Worksheets #19 and #23.

QUALITY CONTROL TASKS:

QC samples will be collected as described in the WP/SAP:

3.2.4.5 Quality Control activities relevant to sub-slab soil vapor sampling

3.3.5 Quality Control activities relevant to indoor air sampling

See also Worksheet #28 which details relevant lab and field QC samples.

SECONDARY DATA:

See Worksheet #13

OTHER DATA:

Not applicable

DATA MANAGEMENT TASKS:

Field notebooks, COC forms, field forms, disks, tapes, and lab reports will be filed and stored at the BMcD offices located in Kansas City, Missouri. After the first six months following completion of the project, these files may be transferred to long-term storage facilities located in Kansas City, Missouri or transferred to USACE. Analytical data will be submitted in hard copy and electronically in SEDD 2a format.

DOCUMENTATION AND RECORDS:

Columbia data package deliverable requirements are outlined on QAPP Worksheet #29.

Project Reporting requirements are discussed in WP/SAP Section 2.2, including:

2.2.1 DQCRs
2.2.2 Monthly Progress Reports
2.2.3 Interim Data Report, includes QCSR for sub-slab soil vapor
2.2.4 Vapor Intrusion Report, includes QCSR for indoor air samples

Field documentation requirements are outlined in WP/SAP Section 3.5, including:

3.5.2 COC Form
3.5.3 Sample Identification Nomenclature

3.5.4 Field Logbook
3.5.5 Field Forms

ASSESSMENT / AUDIT TASKS:

DQCRs will be prepared by the FSM and reviewed by the project team. QA split samples are being collected at 10% frequency and submitted to a secondary laboratory for analysis as part of a Split Sample Audit. These tasks are described on QAPP Worksheets #31 and #32.

DATA REVIEW TASKS:

Data review Steps I, IIa, IIb, and III will be performed on the sub-slab soil vapor and indoor air data. Step I, Verification, is described on QAPP Worksheet #34. Steps IIa and IIb, Validation, are described on QAPP Worksheets #35 and #36. Step III, Data Usability Assessment, is described on QAPP Worksheet #37.

* * * * *

QAPP Worksheet #15
(UFP-QAPP Manual Section 2.8.1)
Reference Limits and Evaluation Table

QAPP Worksheet #15-1 VOCs by TO-15 (Columbia)

Matrix: Air, Sub-Slab Soil Vapor
Analytical Group: VOCs by TO-15
Concentration Level: Low

Analyte	CAS Number	Screening Level[d] ($\mu g/m^3$)	Project QL Goal ($\mu g/m^3$)	Analytical Method[1] TO-15		Columbia's Achievable Laboratory Limits[2]	
				MDLs ($\mu g/m^3$)	QLs ($\mu g/m^3$)	MDLs ($\mu g/m^3$)	QLs ($\mu g/m^3$)
Acetone	67-64-1	6,051	2,017	Not Listed	Not Listed	3.1	25
Benzene	71-43-2	58	19	0.34	Not Listed	0.37	5.1
Bromodichloromethane	75-27-4	30	10	Not Listed	Not Listed	0.66	5.1
Bromoform	75-25-2	134	45	Not Listed	Not Listed	0.86	5.1
Bromomethane	74-83-9	10	3.2	0.53	Not Listed	1.1	5.1
2-Butanone (MEK)	78-93-3	9,413	3,318	Not Listed	Not Listed	0.71	5.1
Carbon Disulfide	75-15-0	1,345	448	Not Listed	Not Listed	0.71	5.1
Carbon Tetrachloride	56-23-5	4.7	1.6	0.42	Not Listed	0.61	2.5
Chlorobenzene	108-90-7	114	38	0.34	Not Listed	0.56	5.1
Chloroethane	75-00-3	649	216	0.19	Not Listed	0.71	5.1
Chloroform	67-66-3	94	31	0.25	Not Listed	0.38	5.1
Chloromethane	74-87-3	175	58	0.40	Not Listed	0.76	5.1
Dibromochloromethane	124-48-1	22	7.5	Not Listed	Not Listed	0.91	5.1
1,2-Dibromoethane	106-93-4	0.94	0.31	Not Listed	Not Listed	0.33	5.1
1,2-Dichlorobenzene	95-50-1	384	128	0.44	Not Listed	0.42	5.1

Analyte	CAS Number	Screening Level[d] (µg/m^3)	Project QL Goal (µg/m^3)	Analytical Method[1] TO-15		Columbia's Achievable Laboratory Limits[2]	
				MDLs (µg/m^3)	QLs (µg/m^3)	MDLs (µg/m^3)	QLs (µg/m^3)
1,3-Dichlorobenzene	541-73-1	202	67	0.36	Not Listed	0.56	5.1
1,4-Dichlorobenzene	106-46-7	86	28	0.70	Not Listed	0.39	5.1
1,1-Dichloroethane	75-34-3	961	320	0.27	Not Listed	0.56	5.1
1,2-Dichloroethane	107-06-2	9.4	3.1	0.24	Not Listed	0.41	5.1
1,1-Dichloroethene	75-35-4	383	128	Not Listed	Not Listed	0.96	5.1
cis-1,2-Dichloroethene	156-59-2	67	22	Not Listed	Not Listed	0.39	5.1
trans-1,2-Dichloroethene	156-60-5	134	45	Not Listed	Not Listed	0.38	5.1
1,2-Dichloropropane	78-87-5	7.7	2.6	0.21	Not Listed	0.26	5.1
cis-1,3-Dichloropropene	10061-01-5	38[a]	13	0.36	Not Listed	0.29	5.1
trans-1,3-Dichloropropene	10061-02-6	38[a]	13	0.22	Not Listed	0.42	5.1
Ethylbenzene	100-41-4	1,950	650	0.27	Not Listed	0.26	5.1
2-Hexanone	591-78-6	Not Available	Not Available	Not Listed	Not Listed	0.39	5.1
Methyl tert-Butyl Ether	1634-04-4	2,069	689	Not Listed	Not Listed	0.56	5.1
Methylene chloride	75-09-2	1,144	381	1.38	Not Listed	0.71	5.1
4-Methyl-2-pentanone (MIBK)	108-10-1	5,782	1,927	Not Listed	Not Listed	0.44	5.1
Styrene	100-42-5	1,950	650	1.64	Not Listed	0.40	5.1
1,1,2,2-Tetrachloroethane	79-34-5	9.4	3.1	0.28	Not Listed	0.56	2.5
Tetrachloroethene (PCE)	127-18-4	67	22	0.75	Not Listed	0.86	5.1
1,1,1-Trichloroethane	71-55-6	4,236	1,412	0.62	Not Listed	0.71	5.1
1,1,2-Trichloroethane	79-00-5	27	9.0	0.50	Not Listed	0.76	5.1
Trichloroethene (TCE)	79-01-6	269 / 4.7[c]	89 / 1.5	0.45	Not Listed	0.66	2.5

Analyte	CAS Number	Screening Level[d] (µg/m^3)	Project QL Goal (µg/m^3)	Analytical Method[1] TO-15		Columbia's Achievable Laboratory Limits[2]	
				MDLs (µg/m^3)	QLs (µg/m^3)	MDLs (µg/m^3)	QLs (µg/m^3)
Trichlorofluoromethane (Freon 11)	75-69-4	1,345	448	Not Listed	Not Listed	0.38	5.1
Trichlorotrifluoroethane (Freon 113)	76-13-1	Not Available	Not Available	Not Listed	Not Listed	0.96	5.1
Toluene	108-88-3	740	246	0.99	Not Listed	0.19	5.1
Vinyl Chloride	75-01-4	118	39	0.33	Not Listed	0.56	5.1
m,p-Xylenes	136777-61-2	195[b]	65	0.76	Not Listed	0.66	5.1
o-Xylene	95-47-6	195[b]	65	0.57	Not Listed	0.56	5.1
2-Propanol (Isopropyl Alcohol)	67-63-0	Not Applicable	Not Applicable	Not Listed	Not Listed	0.61	5.1

[1]Analytical MDLs and QLs are those documented in validated methods.

[2]Achievable MDLs and QLs are limits that an individual laboratory can achieve when performing a specific analytical method. Columbia's achievable limits were determined based upon a 1-liter Summa passivated canister. This example assumes an initial canister pressure/vacuum (after sample collection) of 5 inches of Hg (-2.5 psig).

[a] Represents value for Total 1,3-Dichloropropene.

[b] Represents value for Total Xylenes.

[c]Two values are presented for TCE. These values are based on the use of two different toxicity values (See WP/SAP Section 2.2.3 and WP/SAP Appendix B).

[d]See WP/SAP Table 2-1 .

Since the QL can vary depending upon various conditions, the project QL goal has been established as one-third of the applicable screening level according to guidelines in the UFP-QAPP Manual. Acceptable results are obtained when the laboratory's QL is less than the corresponding screening level. Ideally, the laboratory's QL will be equal to or less than the QL goal; however, this is not a point of data rejection.

QAPP Worksheet #15-2 VOCs by TO-15 (STL Burlington)

Matrix: Air, Sub-Slab Soil Vapor
Analytical Group: VOCs by TO-15
Concentration Level: Low

Analyte	CAS Number	Screening Level[d] (µg/m^3)	Project QL Goal (µg/m^3)	Analytical Method[1] TO-15		STL Burlington's Achievable Laboratory Limits[2]	
				MDLs (µg/m^3)	QLs (µg/m^3)	MDLs (µg/m^3)	QLs (µg/m^3)
Acetone	67-64-1	6,051	2,017	Not Listed	Not Listed	5.23	120
Benzene	71-43-2	58	19	0.34	Not Listed	2.43	6.4
Bromodichloromethane	75-27-4	30	10	Not Listed	Not Listed	4.42	13
Bromoform	75-25-2	134	45	Not Listed	Not Listed	8.06	21
Bromomethane	74-83-9	10	3.2	0.53	Not Listed	3.30	7.8
2-Butanone (MEK)	78-93-3	9,413	3,318	Not Listed	Not Listed	6.78	15
Carbon Disulfide	75-15-0	1,345	448	Not Listed	Not Listed	2.18	16
Carbon Tetrachloride	56-23-5	4.7	1.6	0.42	Not Listed	4.03	13
Chlorobenzene	108-90-7	114	38	0.34	Not Listed	2.76	9.2
Chloroethane	75-00-3	649	216	0.19	Not Listed	2.90	130
Chloroform	67-66-3	94	31	0.25	Not Listed	1.51	9.8
Chloromethane	74-87-3	175	58	0.40	Not Listed	3.72	10
Dibromochloromethane	124-48-1	22	7.5	Not Listed	Not Listed	4.86	17
1,2-Dibromoethane	106-93-4	0.94	0.31	Not Listed	Not Listed	4.61	15
1,2-Dichlorobenzene	95-50-1	384	128	0.44	Not Listed	3.85	12
1,3-Dichlorobenzene	541-73-1	202	67	0.36	Not Listed	3.79	12
1,4-Dichlorobenzene	106-46-7	86	28	0.70	Not Listed	4.81	12
1,1-Dichloroethane	75-34-3	961	320	0.27	Not Listed	2.19	8.1

Analyte	CAS Number	Screening Level[d] (µg/m^3)	Project QL Goal (µg/m^3)	Analytical Method[1] TO-15		STL Burlington's Achievable Laboratory Limits[2]	
				MDLs (µg/m^3)	QLs (µg/m^3)	MDLs (µg/m^3)	QLs (µg/m^3)
1,2-Dichloroethane	107-06-2	9.4	3.1	0.24	Not Listed	2.95	8.1
1,1-Dichloroethene	75-35-4	383	128	Not Listed	Not Listed	3.49	7.9
cis-1,2-Dichloroethene	156-59-2	67	22	Not Listed	Not Listed	3.29	7.9
trans-1,2-Dichloroethene	156-60-5	134	45	Not Listed	Not Listed	2.85	7.9
1,2-Dichloropropane	78-87-5	7.7	2.6	0.21	Not Listed	3.70	9.2
cis-1,3-Dichloropropene	10061-01-5	38[a]	13	0.36	Not Listed	3.95	9.1
trans-1,3-Dichloropropene	10061-02-6	38[a]	13	0.22	Not Listed	3.95	9.1
Ethylbenzene	100-41-4	1,950	650	0.27	Not Listed	3.95	8.7
2-Hexanone	591-78-6	Not Available	Not Available	Not Listed	Not Listed	3.39	20
Methyl tert-Butyl Ether	1634-04-4	2,069	689	Not Listed	Not Listed	3.50	18
Methylene chloride	75-09-2	1,144	381	1.38	Not Listed	7.64	17
4-Methyl-2-pentanone (MIBK)	108-10-1	5,782	1,927	Not Listed	Not Listed	3.20	20
Styrene	100-42-5	1,950	650	1.64	Not Listed	4.69	8.5
1,1,2,2-Tetrachloroethane	79-34-5	9.4	3.1	0.28	Not Listed	4.87	14
Tetrachloroethene (PCE)	127-18-4	67	22	0.75	Not Listed	6.51	14
1,1,1-Trichloroethane	71-55-6	4,236	1,412	0.62	Not Listed	3.16	11
1,1,2-Trichloroethane	79-00-5	27	9.0	0.50	Not Listed	3.33	11
Trichloroethene (TCE)	79-01-6	269 / 4.7[c]	89 / 1.5	0.45	Not Listed	3.71	11
Trichlorofluoromethane (Freon 11)	75-69-4	1,345	448	Not Listed	Not Listed	2.30	11
Trichlorotrifluoroethane (Freon 113)	76-13-1	Not Available	Not Available	Not Listed	Not Listed	5.82	15

Analyte	CAS Number	Screening Level[d] (µg/m^3)	Project QL Goal (µg/m^3)	Analytical Method[1] TO-15		STL Burlington's Achievable Laboratory Limits[2]	
				MDLs (µg/m^3)	QLs (µg/m^3)	MDLs (µg/m^3)	QLs (µg/m^3)
Toluene	108-88-3	740	246	0.99	Not Listed	2.86	7.5
Vinyl Chloride	75-01-4	118	39	0.33	Not Listed	1.51	5.1
m,p-Xylenes	136777-61-2	195[b]	65	0.76	Not Listed	8.25	22
o-Xylene	95-47-6	195[b]	65	0.57	Not Listed	2.56	8.7
2-Propanol (Isopropyl Alcohol)	67-63-0	Not Applicable	Not Applicable	Not Listed	Not Listed	4.00	120

[1]Analytical MDLs and QLs are those documented in validated methods.

[2]Achievable MDLs and QLs are limits that an individual laboratory can achieve when performing a specific analytical method. STL Burlington's achievable limits were determined based upon a 1-liter Summa passivated canister and a 20-milliliter sample injection

[a] Represents value for Total 1,3-Dichloropropene.

[b] Represents value for Total Xylenes.

[c]Two values are presented for TCE. These values are based on the use of two different toxicity values (See WP/SAP Section 2.2.3 and WP/SAP Appendix B).

[d]See WP/SAP Table 2-1

Since the QL can vary depending upon various conditions, the project QL goal has been established as one-third of the applicable screening level according to guidelines in the UFP-QAPP Manual. Acceptable results are obtained when the laboratory's QL is less than the corresponding screening level. Ideally, the laboratory's QL will be equal to or less than the QL goal; however, this is not a point of data rejection.

QAPP Worksheet #16
(UFP-QAPP Manual Section 2.8.2)
Project Schedule / Timeline Table

Activities	Organization	Dates		Deliverable	Deliverable Due Date
		Anticipated Date(s) of Initiation	Anticipated Date of Completion		
Quality Control Plan Preparation	BMcD and MP	04/14/2006	05/02/2006	QC Plan	05/02/2006
Vapor Intrusion Approach Review Meeting	BMcD, MP, and USACE	05/11/2006	05/11/2006	Meeting Minutes	05/18/2006
Pre-Draft Work Plan/Sampling and Analysis Plan (WP/SAP) and QAPP Preparation	BMcD and MP	04/03/2006	05/16/2006	Pre-Draft WP/SAP Pre-Draft QAPP	05/19/2006
Review of Pre-Draft Work Plan and QAPP	USACE and USACE CX	05/22/2006	06/02/2006	Comments on Documents	06/02/2006
Draft WP/SAP and QAPP Preparation	BMcD and MP	06/05/2006	06/16/2006	Draft WP/SAP Draft QAPP	06/16/2006
Regulator/RAB review of Draft WP/SAP and QAPP	RAB, KDHE, USEPA, and USACE	06/19/2006	07/18/2006	Comments on Documents	07/18/2006
Draft Final WP/SAP and QAPP Preparation	BMcD and MP	07/19/2006	08/18/2006	Draft Final WP/SAP Draft Final QAPP	08/18/2006
Regulator/RAB review of Draft Final WP/SAP and QAPP	RAB, KDHE, USEPA, and USACE	08/19/2006	08/29/2006	Comments on Documents	08/29/2006
Final WP/SAP and QAPP Preparation	BMcD and MP	08/30/2006	09/06/2006	Final WP/SAP Final QAPP	09/06/2006
Sub-Slab Soil Vapor Sampling	BMcD	09/07/2006	09/28/2006	Delivery of Samples to Laboratory	09/28/2006
Laboratory Analysis	Columbia and STL Burlington	09/29/2006	10/29/2006	Data Package	10/29/2006
Interim Sub-Slab Data Report Preparation and Data Validation	BMcD and MP	10/30/2006	11/28/2006	Interim Data Report	11/28/2006
Review of Interim Sub-Slab Data	USACE and USACE CX	10/30/2006	11/28/2006	Comments on	11/28/2006

Activities	Organization	Dates		Deliverable	Deliverable Due Date
		Anticipated Date(s) of Initiation	Anticipated Date of Completion		
Report				Document	
Finalize Interim Sub-Slab Data Report	BMcD and MP	11/29/2006	12/11/2006	Final Interim Data Report	12/11/2006
Indoor Air Sampling	BMcD	12/12/2006	01/01/2007	Delivery of Samples to Laboratory	01/01/2007
Laboratory Analysis	Columbia and STL Burlington	01/02/2007	02/01/2007	Data Package	02/01/2007
Pre-Draft Vapor Intrusion Report Preparation and Data Validation	BMcD and MP	02/02/2007	03/04/2007	Pre-Draft Vapor Intrusion Report	03/04/2007
Review of Pre-Draft Vapor Intrusion Report	USACE and USACE CX	03/05/2007	04/04/2007	Comments on Document	04/04/2007
Draft Vapor Intrusion Report Preparation	BMcD and MP	04/05/2007	04/30/2007	Draft Vapor Intrusion Report	04/30/2007
Regulator/RAB review of Draft Vapor Intrusion Report	RAB, KDHE, USEPA, and USACE	05/01/2007	05/31/2007	Comments on Document	05/31/2007
Final Vapor Intrusion Report Preparation	BMcD and MP	06/01/2007	06/11/2007	Final Vapor Intrusion Report	06/11/2007

RAB = Restoration Advisory Board

Note: This schedule will be routinely updated by BMcD and MP during the course of the project.

QAPP Worksheet #17
(UFP-QAPP Manual Section 3.1.1)
Sampling Design and Rationale

Describe and provide rationale for choosing the sampling approach:

The overall rationale for the vapor intrusion investigation is presented in WP/SAP Section 3.1. The investigation will be conducted in a phased approach. Sub-slab soil vapor samples will be collected and analyzed for VOCs from most of the occupied structures that are located wholly or partially within the 100 µg/L contour line for total chlorinated solvents in groundwater (See WP/SAP Section 3.2, WP/SAP Table 3-1, and WP/SAP Figure 1-2), representing a biased and judgmental sampling scheme.

Based upon the results of the sub-slab soil vapor data, locations will be selected for collection of indoor air samples. During Phase 2, indoor air samples will be collected from buildings where one or more sub-slab soil vapor samples exhibited VOC concentrations exceeding the sub-slab screening level. These indoor air samples will be analyzed for only those VOCs that were detected at concentration in excess of the screening levels during the sub-slab soil vapor sampling. In addition to the indoor air samples, ambient air samples will be collected to provide a measure of the background concentration of VOCs in outdoor air.

Describe the sampling design rationale in terms of what matrices will be sampled, what analytical groups will be analyzed and at what concentration levels, the sampling locations, the number of samples to be taken, and the sampling frequency:

See also QAPP Worksheet #18.

Sub-slab soil vapor samples will be collected and analyzed for VOCs in September 2006 from 11 of the occupied structures that are located wholly or partially within the 100 µg/L contour line for total chlorinated solvents in groundwater (See WP/SAP Section 3.2, WP/SAP Table 3-1, and WP/SAP Figure 3-1). One to two sub-surface soil vapor samples will be collected from each building, depending upon building size. QC activities include the performance of leak tests (physical and chemical), collection of field duplicate and QA split samples with a frequency of 10 percent, and submission of trip blank samples. Additionally, any QC samples required by the analytical method will be analyzed. Sub-slab samples will not be collected within 5 days of precipitation or irrigation events to minimize potential bias in the data. Samples will be submitted to the laboratory and analyzed for VOCs using USEPA Method TO-15. Phase 1 activities are described in detail in WP/SAP Section 3.2, WP/SAP Table 3-1 and WP/SAP Figure 1-2.

During Phase 2, indoor air samples will be collected from buildings where one or more sub-slab soil vapor samples exhibited VOC concentrations exceeding the sub-slab screening level. One to two sub-surface soil vapor samples will be collected from each building, depending upon its size. These indoor air samples will be analyzed for only those VOCs that were detected at concentrations in excess of screening levels during the sub-slab soil vapor sampling. At this point in time it is planned that the indoor air samples will be analyzed by USEPA TO-15. If review of the sub-slab soil vapor data indicates that the analyte list will include chemicals for which Method TO-15 does not provide adequate QLs, the analytical method may be changed to USEPA TO-15SIM to achieve lower QLs. In addition to the indoor air samples, ambient air samples will be collected to provide a measure of the background concentration of VOCs in outdoor air. Additionally, a building survey will identify any potential sources of VOCs other than vapor migration. QC activities include the collection of field duplicate and QA split samples with a frequency of 10 percent and submission of trip blank samples. Additionally, QC samples required by the analytical method will be analyzed. Phase 2 activities are described in detail in WP/SAP Section 3.3.

* * * * *

QAPP Worksheet #18
(UFP-QAPP Manual Section 3.1.1)
Sampling Locations and Methods/SOP Requirements Table

Sampling Location / ID Number	Matrix	Sample Duration	Analytical Group	Concentration Level	Number of Samples (identify field duplicates)	Sampling SOP Reference	Rationale for Sampling Location
DOD 624 DOD 628 Former Auto Mehcanic Building (DOD 638) Former Vocational-Technical Building (DOD 658) Former Raytheon Hanger (DOD 724) DOD 837 Composites Lab (CL) Harbin Hall (HH) Residence Hall (RH) Technology Center (TC) College Center (CC)	Air (Sub-Slab Soil Vapor)[a]	5-10 Minutes	VOC TO-15	Low	20 Sub-Slab Soil Vapor Samples, 2 field duplicate samples, 2 QA split samples, and a trip blank for each day in the field.	Sub-Slab Soil Vapor WP/SAP Section 3.2	WP/SAP Section 3.2 WP/SAP Table 3-1 WP/SAP Figure 1-2 Worksheet #17
DOD 624 DOD 628 Former Auto Mechanic Building (DOD 638) Former Vocational-Technical Building (DOD 658) Former Raytheon Hanger (DOD 724) DOD 837 Composites Lab (CL) Harbin Hall (HH) Residence Hall (RH) Technology Center (TC) College Center (CC)	Air (Indoor Air)[b]	8 Hours*	VOC TO-15	Low	Maximum of 29 Indoor Air Samples, 3 field duplicate samples, 3 QA split samples, 3 ambient air blanks, and a trip blank for each day in the field.	Indoor Air WP/SAP Section 3.3	WP/SAP Section 3.3 WP/SAP Table 3-2 Worksheet #17
*Indoor air Sample duration for Harbin Hall and the Residence Hall will be 24 Hours.							

QAPP Worksheet #18
(UFP-QAPP Manual Section 3.1.1)
Sampling Locations and Methods/SOP Requirements Table (continued)

[a]Sub-Slab Sampling – See Table 3-1 and Figure 1-2 in WP/SAP.

[b]Indoor Air Sampling – See Table 3-2 in WP/SAP. The number of indoor air sampling locations will be determined based upon the sub-slab soil vapor results. Table 3-2 in the WP/SAP presents the sample collection scheme assuming that indoor air samples will be required at all buildings.

QAPP Worksheet #19
(UFP-QAPP Manual Section 3.1.1)
Analytical SOP Requirements Table

Matrix	**Analytical Group**	**Concentration Level**	**Analytical and Preparation Method / SOP Reference[1]**	**Sample Volume**	**Containers** (number, size, and type)	**Preservation Requirements** (chemical, temperature, light protected)	**Maximum Holding Time** (preparation / analysis)
Sub-Slab Soil Vapor	VOCs	Low	USEPA TO-15	1 liter	1 liter Summa™ canister	Maintain pressure within canister	30 Days
Indoor Air	VOCs	Low	USEPA TO-15	6 liters	6 liter Summa™ canister	Maintain pressure within canister	30 Days
Columbia's SOP for USEPA TO-15 is VOA-TO15. STL Burlington's SOP for USEPA TO-15 is LM-AT-TO14/TO15							

[1]A copy of USEPA TO-15 is provided in Appendix C.

QAPP Worksheet #20
(UFP-QAPP Manual Section 3.1.1)
Field Quality Control Sample Summary Table

The following table summarizes by matrix, analytical group, and concentration level the number of field QC samples that will be collected and submitted to the laboratory.

Matrix	Analytical Group	Conc. Level	Analytical and Preparation SOP Reference	No. of Sampling Locations[a]	No. of Field Duplicate Pairs[b]	No. of Lab Duplicates	No. of Trip Blanks	No. of Ambient Air Blanks	No. of PT Samples	Total No. of Samples to Lab
Sub-Slab Soil Vapor	VOCs	Low	USEPA TO-15	20	2	2	One per each day in the field (assumed 5)	Not Applicable	0	29
Indoor Air	VOCs	Low	USEPA TO-15	29	3	2	One per each day in the field (assumed 5)	3	0	42

PT = Perfomance Testing
Columbia's SOP for USEPA TO-15 is VOA-TO15.
STL Burlington's SOP for USEPA TO-15 is LM-AT-TO14/TO15.

[a]See WP/SAP Table 3-2 for indoor air. The number of indoor air sampling locations will be determined based upon the sub-slab soil vapor results. Table 3-2 in the WP/SAP presents the sample collection scheme assuming that indoor air samples will be required at all buildings.

[b]In addition to field duplicate samples that will be submitted to the primary analysis lab, quality assurance split samples will be sent to a secondary lab.

QAPP Worksheet #21
(UFP-QAPP Manual Section 3.1.2)
Project Sampling SOP References Table

A complete discussion of sampling procedures and requirements is provided in WP/SAP Section 3.0 and the associated tables, figures and appendices. Procedures are presented within the text of the WP/SAP and formalized SOP documents are not provided separately. Further discussion of sampling procedures and requirements will reference the appropriate section of the WP/SAP that addresses the item.

Reference Number	Title, Revision Date and / or Number	Originating Organization	Equipment Type	Modified for Project Work? (Y/N)	Comments
WP/SAP Section 3.2	Phase One Investigation – Sub-Slab Soil Vapor Sampling	BMcD	Sub-Slab Soil Vapor Probes 1 liter Summa™ canister	N	Section 3.2 of the WP/SAP describes the rationale, initial building survey, sub-slab soil vapor probe construction and installation, sub-slab sampling procedures, equipment, and supplies.
WP/SAP Appendix C	USEPA Draft Standard Operating Procedure (SOP) for Installation of Sub-Slab Soil Vapor Probes and Sampling Using EPA Method TO-15 to Support Vapor Intrusion Investigations.	USEPA	Sub-Slab Soil Vapor Probes Summa™ canister	Y Leak test procedures were added.	This SOP is used in conjunction with procedures provided in the text of WP/SAP 3.2.
WP/SAP Section 3.3	Phase Two Investigation – Indoor Air Sampling	BMcD	6 liter Summa™ canister	N	Section 3.3 of the WP/SAP describes the rationale, building survey, indoor air sampling procedures, and QC samples.
WP/SAP Appendix C	KDHE Standard Operating Procedure BER-33, Procedures for Sampling and Analysis of Indoor Air Samples, 12/27/2000	KDHE	6 liter Summa™ canister	N	This SOP is used in conjunction with procedures provided in the text of WP/SAP 3.3.
WP/SAP Appendix C	Instruction for Sampling with Summa Canister	Columbia	Summa™ canister	N	This SOP is used in conjunction with procedures provided in the text of WP/SAP 3.2 and 3.3.
WP/SAP Section 3.5.2	Chain of Custody Form	BMcD	Not Applicable	N	Instructions for completion of the COC form.

Reference Number	Title, Revision Date and / or Number	Originating Organization	Equipment Type	Modified for Project Work? (Y/N)	Comments
WP/SAP Section 3.5.3	Sample Identification Nomenclature	BMcD	Not Applicable	N	Instructions for development of appropriate sample names.
WP/SAP Section 3.5.4	Field Logbook	BMcD	Not Applicable	N	Instructions for completion of the field logbook.
WP/SAP Section 3.5.5	Field Forms	BMcD	Not Applicable	N	Instructions for completion of field forms relevant to the project.
WP/SAP Section 3.6	Sample Handling and Shipment	BMcD	Not Applicable	N	Instructions for preparation of samples for shipment to the lab.
WP/SAP Section 3.7	Sample Location Mapping	BMcD	Not Applicable	N	Instructions for documenting sampling locations within each building.

Equipment/Sample Containers Cleaning and Decontamination Procedure

All equipment that could potentially contact contaminated media will be dedicated and/or disposable. Therefore no field equipment decontamination will be required. The sub-slab vapor probe installation and sampling will generate small amounts of solid investigation-derived waste (IDW) including, concrete dust, gloves, isopropyl alcohol cloths, drill bits, and tubing. This material will be bagged and disposed of as municipal waste in accordance with applicable regulations. No liquid IDW will be generated.

The laboratory is responsible for cleaning and decontamination procedures for their equipment. These procedures are discussed in Columbia's QAM (see Appendix A) and SOPs. Since Columbia's SOPs are considered proprietary information, they are not included as attachments to this QAPP; however, a list of their SOPs is provided in their QAM. Similar information is provided for STL Burlington in their QMP (See Appendix B).

QAPP Worksheet #22
(UFP-QAPP Manual Section 3.1.2.4)
Field Equipment Calibration, Maintenance, Testing, and Inspection Table

Field Equipment	Calibration Activity	Maint. Activity	Testing Activity	Inspection Activity	Frequency	Acceptance Criteria	Corrective Action	Resp. Person	SOP Reference
PID	See Operation Manual, QAPP Appendix D	See Operation Manual, QAPP Appendix D	See Operation Manual, QAPP Appendix D	See Operation Manual, QAPP Appendix D	See Operation Manual, QAPP Appendix D and WP/SAP 3.2.4.4	See Operation Manual, QAPP Appendix D	See Operation Manual, QAPP Appendix D	FSM	Organic Vapor Meter (OVM) / Datalogger Instruction Manual

Note: The OVM Instruction Manual, provides criteria for calibration, maintenance, testing, and inspection of the instrument (See Appendix D).

Sampling Supply Inspection and Acceptance Procedures

The FSM will inspect the Summa™ canisters prior to use for obvious damage (dents, faulty seals, etc.). All flow regulators/particulate filters and vacuum gauges will be similarly inspected. If problems are noted that would potentially impact data quality, the item will be placed out-of-service and a replacement device will be obtained from the laboratory.

It should be noted that the analog vacuum gauges that are supplied by the laboratory for use in the field are intended solely for use in determining if the canister was sufficiently evacuated upon receipt from the lab or if a sample has been collected. Measurements taken using the field gauges are intended to be used only for relative comparison with each other and not for comparison with measurements taken at the laboratory. Readings from these analog field instruments are not equivalent to measurements taken using highly-sensitive NIST-traceable digital gauges that are used in a laboratory setting.

Field Documentation Procedures

Field documentation procedures are presented in WP/SAP Sections 3.5 and 3.7.

QAPP Worksheet #23
(UFP-QAPP Manual Section 3.2.1)
Analytical SOP References Table

Sub-slab soil vapor samples and indoor air samples will be collected and submitted to Columbia (primary laboratory) and STL Burlington (QA laboratory) for analysis. Samples will be analyzed for VOCs using USEPA Method TO-15. At this point in time it is planned that the indoor air samples will be analyzed by USEPA TO-15. If review of the sub-slab soil vapor data indicates that the analyte list will include chemicals for which TO-15 does not provide adequate QLs, the analytical method may be changed to USEPA TO-15SIM to achieve lower QLs. The final determination of the indoor air analyte list and analytical method will be addressed in a letter addendum to the WP/SAP that will be provided to USACE-CENWK.

Columbia's SOP VOA-TO15 and STL Burlington's LM-AT-TO14/TO15 detail their procedures for sample preparation and analysis. Since both laboratories consider SOPs proprietary information, they are not included as attachments to this QAPP; however, a copy of USEPA Method TO-15 is provided in Appendix C.

Reference Number	Title, Revision Date, and / or Number[a]	Definitive or Screening Data	Analytical Group	Instrument	Organization Performing Analysis	Modified for Project Work? (Y/N)
VOA-TO15	Determination of Volatile Organic Compounds in Air Samples Collected in Specially Prepared Canisters and Gas Collection Bags and Analyzed by Gas Chromatography/Mass Spectroscopy (GC/MS), Revision 11, December 13, 2005. Prepared by Columbia.	Definitive	VOC	GC/MS	Columbia	N
LM-AT-TO14/TO15	Volatile Organic Compounds (VOCs) in Air by GC/MS, EPA Compendium Method TO-14 / TO-15, Revision 5, April 10, 2006. Prepared by STL Burlington	Definitive	VOC	GC/MS	STL Burlington	N

Reference Number	Title, Revision Date, and / or Number[a]	Definitive or Screening Data	Analytical Group	Instrument	Organization Performing Analysis	Modified for Project Work? (Y/N)
Non-Analytical SOPs used by Laboratory in Support of Analysis						
SMO-CanCert	Cleaning and Certification of Summa Canisters and Other Specially Prepared Canisters. Prepared by Columbia.	Not Applicable	Not Applicable	Not Applicable	Columbia	N
SMO-SMPL_REC	Sample Receiving, Acceptance, and Log-In. Prepared by Columbia.	Not Applicable	Not Applicable	Not Applicable	Columbia	N
ADM-Smple_SAT	Laboratory Sample Storage, Analysis, and Tracking. Prepared by Columbia.	Not Applicable	Not Applicable	Not Applicable	Columbia	N
DSP-Sample	Waste Disposal. Prepared by Columbia.	Not Applicable	Not Applicable	Not Applicable	Columbia	N

QAPP Worksheet #24
(UFP-QAPP Manual Section 3.2.2)
Analytical Instrument Calibration Table

The laboratory is responsible for analytical instrument calibration procedures. These procedures are expected to meet any requirements established in the applicable method (i.e., USEPA Method TO-15). A general discussion of Columbia's calibration procedures and frequency is presented in Columbia's QAM (see Appendix A), and specific requirements are detailed in Columbia's SOP VOA-TO15. Similar information is provided for STL Burlington in their QMP (See Appendix B) and SOP LM-AT-TO14/TO15. Since the laboratories consider SOPs proprietary information, they are not included as attachments to this QAPP. This worksheet presents general requirements based upon review of the Columbia and STL Burlington SOPs.

Instrument	Calibration Procedure	Frequency of Calibration	Acceptance Criteria	Corrective Action (CA)	Person Responsible for CA	SOP Reference
GC/MS (Columbia)	See VOA-TO15 and Initial Calibration Review Checklist in the Columbia SOP	Instrument calibration occurs as follows: • Instrument set-up • After instrument maintenance • If corrective actions do not fix the problem.	Detailed in lab SOP Section 12.2.1 and Figure 1. • RRT within 0.06 RRT units of the mean RRT • %RSD for each compound <30% with up to two exceptions <40% • IS area for each concentration within 40% of mean response area • Verified with an acceptable ICV. Acceptable ICV results are between 70-130%.	Detailed in lab SOP Section 15.2 and Figure 1. • Isolate and correct the source of non-linearity. (Note: Initial calibration cannot be interrupted by maintenance.) • If 5 calibration standards are in the ICAL, one standard may be reanalyzed. If 6 to 10 calibration standards are in the ICAL, two calibration standards may be reanalyzed. • If a point or calibration standard is dropped, the reason must be documented. • If maintenance is necessary to correct the problem, then all	Lab Analyst	Columbia VOA-TO15

Instrument	Calibration Procedure	Frequency of Calibration	Acceptance Criteria	Corrective Action (CA)	Person Responsible for CA	SOP Reference
				calibration points must be reanalyzed.		
GC/MS (STL Burlington)	See LM-AT-TO14/TO15	Instrument calibration occurs as follows: • Instrument set-up • New column installed • After instrument maintenance • When CCV standard does not meet acceptance criteria	Detailed in lab SOP Section 10.2, 10.3 and Table 3. • RRT within 0.06 RRT units of the mean RRT • %RSD for each compound <30% with up to two exceptions <40% • RT shift for IS at each calibration level must be within 20 seconds of the mean RT over the initial calibration range. • Verified with an acceptable ICV. Acceptable ICV results are between 70-130%.	Correct problem, repeat calibration	Lab Analyst	STL Burlington LM-AT-TO14/TO15

ICAL = Initial Calibration
ICV = Initial Calibration Verification
IS = Internal Standard
RRT = Relative Retention Time
%RSD = Percent Relative Standard Deviation
RT = Retention Time

QAPP Worksheet #25
(UFP-QAPP Manual Section 3.2.3)
Analytical Instrument and Equipment Maintenance, Testing, and Inspection Table

The laboratories are responsible for analytical instrument and equipment maintenance, testing, and inspection procedures. A general discussion of Columbia's instrument and equipment maintenance, testing, and inspection procedures is presented in Columbia's *QAM* (see Appendix A), and specific requirements are detailed in Columbia's SOP VOA-TO15. SOPs have been developed by Columbia to address instrument maintenance issues. A list of relevant SOPs is located in Appendix C to the *QAM.* Since Columbia's SOPS are considered proprietary information, they are not included as attachments to this QAPP. This worksheet prevents a summary of preventative maintenance items relevant to the GC/MS system for Columbia. Similar activities are required for the QA laboratory, STL Burlington (See Appendix B).

Instrument / Equipment	Maintenance Activity	Testing Activity	Inspection Activity	Frequency	Acceptance Criteria	Corrective Action	Responsible Person	SOP Reference
GC/MS	Concentrating Trap • Solvent cleaning of the Silco steel lines in valve oven • Replacement of the multi-sorbent or partial replacement of the trap	Not Applicable	Deteriorated analyte performance is noted	When contamination is suspected	Clean blank is generated	Not Applicable.	Lab Analyst	VOA-TO15
	GC System • Clip head of column	Not Applicable	Deterioration of peak shapes or column bleed is noted.	Periodically, when problems are noted.	Improved peak quality noted.	If column maintenance activities do not correct problem, replace the column.	Lab Analyst	VOA-TO15
	GC System • Replace Ferrules	Leak Test	Seal is not maintained.	Periodically, when problems are noted.	Leak test is passed. Improved peak quality noted.	Replace Ferrules	Lab Analyst	VOA-TO15

Instrument / Equipment	Maintenance Activity	Testing Activity	Inspection Activity	Frequency	Acceptance Criteria	Corrective Action	Responsible Person	SOP Reference
	MS • Clean mass selective detector (MSD) ion source	Not Applicable	Difficulty keeping the MSD in tune and/or fluctuating IS areas are noted.	Periodically, when problems are noted.	Improved performance following cleaning is noted.	Not Applicable	Lab Analyst	VOA-TO15
	MS • Service Vacuum System	Not Applicable	Inspect molecular sieve	Every 6 months	Not Applicable	Change Vacuum Pump Oil	Analyst	VOA-TO15

Analytical Supply Inspection and Acceptance Procedures

The laboratories are responsible for maintaining procedures for inspection and acceptance of supplies and materials into their facility. These procedures are discussed in Columbia's QAM (see Appendix A), STL Burlington's QMP (see Appendix B), and laboratory SOPs. Since the laboratories consider SOPs proprietary information, they are not included as attachments to this QAPP; however, a list of Columbia's SOPs is provided in their QAM. A list of STL Burlington's SOPs is available upon request.

QAPP Worksheet #26
(UFP-QAPP Manual Appendix A)
Sample Handling System

This worksheet identifies components of the project-specific sample handling system. Personnel who are primarily responsible for ensuring proper handling, custody, and storage of field samples from the time of collection, to laboratory delivery, to final sample disposal are presented on this worksheet. In addition, the number of days that field samples and their extracts/digestates will be archived prior to disposal is provided.

SAMPLE COLLECTION, PACKAGING, AND SHIPMENT
Sample Collection (Personnel/Organization): Field Sampling Team, BMcD
Sample Packaging (Personnel/Organization): Field Sampling Team, BMcD
Coordination of Shipment (Personnel/Organization): Field Site Manager, BMcD
Type of Shipment/Carrier: Overnight/FedEx
SAMPLE RECEIPT AND ANALYSIS
Sample Receipt (Personnel/Organization): Sample Management Supervisor, Columbia
Sample Custody and Storage (Personnel/Organization): Sample Management Supervisor, Columbia
Sample Preparation (Personnel/Organization): Team Leader (VOA GC/MS), Columbia
Sample Determinative Analysis (Personnel/Organization): Team Leader (VOA GC/MS), Columbia
SAMPLE ARCHIVING
Field Sample Storage (No. of days from sample collection): Sample holding time is 30 days.
Sample Extract/Digestate Storage (No. of days from extraction/digestion): Not Applicable
Biological Sample Storage (No. of days from sample collection): Not Applicable
SAMPLE DISPOSAL
Personnel/Organization: Disposal Technician, Columbia and STL Burlington
Number of Days from Analysis: 10 Days following receipt of final data package.

QAPP Worksheet #27
(UFP-QAPP Manual Section 3.3.3)
Sample Custody Requirements Table

A complete discussion of sample collection documentation, handling, tracking, and custody procedures and requirements is provided in WP/SAP Sections 3.5 through 3.7 and the associated appendices. Procedures are presented within the text of the WP/SAP and formalized SOP documents are not provided separately. Further discussion of sample collection documentation, handling, tracking, and custody procedures and requirements will reference the appropriate section of the WP/SAP that addresses the item.

Field Sample Custody Procedures (sample collection, packaging, shipment, and delivery to the laboratory):

The following sections in the WP/SAP present the field sampling custody procedures:

3.5.1 Sample Chain-of-Custody
3.5.2 Chain-of-Custody Form
3.6 Sample Handling and Shipment

Laboratory Sample Custody Procedures (receipt of samples, archiving, disposal):

Columbia's custody procedures are discussed in the laboratory's QAM and associated SOPs. A copy of the QAM is provided in Appendix A. Similar information is available for the QA laboratory, STL Burlington, in their QMP (See Appendix B).

Sample Identification Procedures:

The following section in the WP/SAP presents the sample identification procedures:

3.5.3 Sample Identification Nomenclature

Chain-of-Custody Procedures:

The following sections in the WP/SAP present the COC procedures:

3.5.1 Sample Chain-of-Custody
3.5.2 Chain-of-Custody Form

* * * * *

QAPP Worksheet #28
(UFP-QAPP Manual Section 3.4)
QC Samples Table

QAPP Worksheet #28-1 Sub-slab soil vapor and Indoor Air analysis using TO-15

Matrix	Sub-Slab Soil Vapor Indoor Air
Analytical Group	VOCs
Concentration Level	Low
Sampling SOP	Sub-Slab Soil Vapor WP/SAP Section 3.2 Indoor Air WP/SAP Section 3.3
Analytical Method / SOP Reference	USEPA TO-15
Sampler's Name	TBD
Field Sampling Organization	BMcD
Analytical Organization	Columbia and STL Burlington
Number of Sample Locations	20 sub-slab Max 29 indoor air

QC Sample	Frequency / Number	Method / SOP QC Acceptance Limits	Corrective Action	Person(s) Responsible for Corrective Action	Data Quality Indicator (DQI)	Measurement Performance Criteria
Method Blank	1 per Batch (20 samples)	No target compounds > ½ QL or >QL for common contaminants	Repeat analysis with remaining QC canisters. Determine if problem is in instrument or due to blank sample container. Reanalyze impacted samples once problem is corrected	Analyst	Accuracy/Bias – Contamination	No target compounds > ½ QL or >QL for common contaminants

Matrix	Sub-Slab Soil Vapor Indoor Air
Analytical Group	VOCs
Concentration Level	Low
Sampling SOP	Sub-Slab Soil Vapor WP/SAP Section 3.2 Indoor Air WP/SAP Section 3.3
Analytical Method / SOP Reference	USEPA TO-15
Sampler's Name	TBD
Field Sampling Organization	BMcD
Analytical Organization	Columbia and STL Burlington
Number of Sample Locations	20 sub-slab Max 29 indoor air

QC Sample	Frequency / Number	Method / SOP QC Acceptance Limits	Corrective Action	Person(s) Responsible for Corrective Action	Data Quality Indicator (DQI)	Measurement Performance Criteria
Laboratory Control Sample	1 per Batch (20 samples)	Within laboratory acceptance limits. Table 12-1 (Columbia) or 70% < REC < 130% (STL Burlington)	If the problem is instrumentation, perform maintenance and re-analyze. If the problem is a poor injection, then re-analyze.	Analyst	Accuracy/Bias	REC within limits Columbia Table 12-1 STL Burlington 70% <REC< 130%
Laboratory Duplicate	1 per Batch (20 samples)	RPD ≤ 25% for each target compound	Perform second duplicate analysis. If the results are still unacceptable and the associated samples are not reanalyzed, flag the data.	Analyst	Precision	RPD ≤ 25% for each target compound
Surrogate Spike	Surrogates are spiked into each sample	Surrogate REC should be between 70 – 140%	If obvious matrix interference problems are noted, repeat analysis with a smaller aliquot.	Analyst	Accuracy/Bias	Surrogate REC should be between 70-140%

Matrix	Sub-Slab Soil Vapor Indoor Air
Analytical Group	VOCs
Concentration Level	Low
Sampling SOP	Sub-Slab Soil Vapor WP/SAP Section 3.2 Indoor Air WP/SAP Section 3.3
Analytical Method / SOP Reference	USEPA TO-15
Sampler's Name	TBD
Field Sampling Organization	BMcD
Analytical Organization	Columbia and STL Burlington
Number of Sample Locations	20 sub-slab Max 29 indoor air

QC Sample	Frequency / Number	Method / SOP QC Acceptance Limits	Corrective Action	Person(s) Responsible for Corrective Action	Data Quality Indicator (DQI)	Measurement Performance Criteria
Trip Blank	One submitted with each day's canisters	No target compounds > ½ QL or >QL for common contaminants	If detections > QL are noted, the lab will be asked to confirm the results if similar detections are noted in the field samples.	BMcD Chemist	Accuracy/Bias	No target compounds > ½ QL or >QL for common contaminants
Field Duplicate	10% of field samples	See Figure 12-1	Evaluation of source of deviance. Potential resampling.	BMcD Chemist	Precision	See Figure 12-1
QA Split Sample	10% of field samples	See Figure 12-1	Evaluation of source of deviance. Potential resampling.	BMcD Chemist	Comparability Precision	See Figure 12-1
Mechanical Leak Test	Each canister assembly	Vacuum maintained for 10 minutes	If vacuum cannot be maintained, discontinue sampling activities until leak can be identified and corrected.	FSM	Representativeness	Vacuum maintained for 10 minutes
Chemical Leak Test	Each canister assembly	No isopropyl alcohol detections > 10% of starting concentration	Reject Data	BMcD Chemist	Representativeness	No isopropyl alcohol detections > 10% of starting concentration

Matrix	Sub-Slab Soil Vapor Indoor Air
Analytical Group	VOCs
Concentration Level	Low
Sampling SOP	Sub-Slab Soil Vapor WP/SAP Section 3.2 Indoor Air WP/SAP Section 3.3
Analytical Method / SOP Reference	USEPA TO-15
Sampler's Name	TBD
Field Sampling Organization	BMcD
Analytical Organization	Columbia and STL Burlington
Number of Sample Locations	20 sub-slab Max 29 indoor air

QC Sample	Frequency / Number	Method / SOP QC Acceptance Limits	Corrective Action	Person(s) Responsible for Corrective Action	Data Quality Indicator (DQI)	Measurement Performance Criteria
Not Applicable	Each Sample	Sample analyzed with the applicable method holding time	Reject Data	BMcD Chemist	Representativeness	Sample analyzed with the applicable method holding time

QAPP Worksheet #29
(UFP-QAPP Manual Section 3.5.1)
Project Documents and Records Table

Project Reports and Deliverables are described in additional detail in WP/SAP Section 2.2.

Sample Collection Documents and Records	On-Site Analysis Documents and Records	Off-Site Analysis Documents and Records	Data Assessment Documents and Records	Other
Field Notes and Field Forms (building questionnaires, field data air sampling form, indoor air quality/building survey)	Not Applicable	Analytical Hard Copy Data Packages	DQCR	Interim Sub-Slab Data Report
COC Records		SEDD 2a electronic deliverable	Monthly Progress Reports	Vapor Intrusion Report
Air Bills		Sample Receipt, Custody, and Tracking Records	QCSR (i.e., data validation reports included in Interim Sub-Slab Data Report and Vapor Intrusion Report)	
Custody Seals		Copies of instrument calibration records, maintenance records, raw data, etc. should be maintained as indicated in the lab's QAM.	Telephone and Email Logs	
Telephone and Email Logs		TO-15 Initial Calibration Review Checklist		
Field Forms		TO-15 Data Review Checklist		

DATA PACKAGE DELIVERABLES

Sample Collection and Field Measurements Data Package Deliverables

Field measurements will be collected using a PID. Information pertaining to equipment maintenance, calibration, and calibration verification of the PID will be maintained in the field logbook (See WP/SAP Section 3.5.4).

On-Site Analytical Data Package Deliverables

Not applicable. No on-site analysis is being performed.

Off-Site Laboratory Data Package Deliverables

Columbia and STL Burlington are providing the analytical services for the vapor intrusion project (see Worksheet #30). Sampling events are being conducted for sub-slab soil vapor and indoor air as two separate sampling events. Analytical results will be provided for each phase of the investigation by Columbia and STL Burlington within 21 days of receipt of the last sample for each event.

Laboratory data packages deliverables from Columbia and STL Burlington will include the following information:

- Case narrative – A case narrative will be provided by the lab to include basic project information and a summary of any analytical problems and their resolution.
- Shipping/Receiving Documents – Shipping/Receiving documents provided by the lab will include airbills, COC forms, and sample receipt or log-in sheets.
- Sample Data/Results – Sample data/results will include the field sample name, its associate lab identification number, method name, results for each target analyte with appropriate units, data qualifiers, SQLs for all compounds, and identification of analytical batch.
- QC Summary Data - QC summary data will be provided for all method blanks, laboratory duplicates, surrogate spikes, and LCS. This information will include identification of the analytical batch, its association with the field sample, results for the QC sample, acceptance criteria for the QC sample, and identification of any corrective actions that were required.

Additional information regarding Columbia's analytical reports is located in their QAM (See Appendix A). Similar information for STL Burlington is provided in their QMP (See Appendix B).

DATA REPORTING FORMATS

Data reporting guidelines for field forms and logbooks is provided in WP/SAP Section 3.5.4. Copies of field forms for the vapor intrusion investigation are provided in WP/SAP Appendix A.

Analytical data will be provided as both a hard copy and electronic submittal. The electronic of the analytical data will be provided in SEDD 2a format (See www.epa.gov/superfund/programs/clp/sedd.htm). Data reporting guidelines and relevant forms and checklists for Columbia are provided in their QAM (See Appendix A, Section 13.0) and SOPs. Since Columbia's SOPs are considered proprietary information, they are not included as attachments to this QAPP; however, a list of SOPs is provided in their QAM. Similar information is provided for STL Burlington in Section 5.9 of their QMP (See Appendix B).

DATA HANDLING AND MANAGEMENT

Data recording, transformation, reduction, transfer, and analysis information for Columbia are provided in their QAM (See Appendix A, Section 13.0) and SOPs. Since Columbia's SOPS are considered proprietary information, they are not included as attachments to this QAPP; however, a list of SOPs is provided in their QAM. Similar information is provided for STL Burlington in Section 5.9 of their QMP (See Appendix B).

DATA TRACKING AND CONTROL

The BMcD Project Manager has the overall responsibility for data tracking and control. These data management activities include record-keeping, tracking, document control systems, and data handling to process, compile, analyze, and transmit data. Day-to-day oversight of sampling activities, laboratory activities, and data tracking and receipt will be the responsibility of the BMcD Project Manager or a designated project team member.

All project teams members are responsible for handling data in a manner consistent with procedures listed in WP/SAP Section 3.5 (Chain of Custody/Documentation) which includes information pertaining to field logbooks, sample numbering, sample documentation, laboratory assignments, documentation (cooler/shipping documentation and filing system), and corrections to documentation.

* * * * *

QAPP Worksheet #30
(UFP-QAPP Manual Section 3.5.2.3)
Analytical Services Table

Matrix	**Analytical Group**	**Concentration Level**	**Sample Locations/ID Number**	**Analytical SOP**	**Data Package Turnaround Time**	**Laboratory / Organization** (name and address, contact person and telephone number)	**QA Split Sample Laboratory / Organization** (name and address, contact person and telephone number)
Sub-Slab Soil Vapor	VOCs TO-15	Low	See Worksheet #18	USEPA TO-15	21 Days	Columbia Analytical Services, Inc. 2665 Park Center Drive, Ste. D Simi Valley, CA 93065 Phone: (805) 526-7161 Contact: Michael Tuday	STL Burlington 208 South Park Drive Suite 1 Colchester, VT 05446 Phone: (802) 655-1203 Contact: Don Dawicki
Indoor Air	VOCs TO-15	Low	See Worksheet #18	USEPA TO-15	21 Days	Columbia Analytical Services, Inc. 2665 Park Center Drive, Ste. D Simi Valley, CA 93065 Phone: (805) 526-7161 Contact: Michael Tuday	STL Burlington 208 South Park Drive Suite 1 Colchester, VT 05446 Phone: (802) 655-1203 Contact: Don Dawicki
Columbia's SOP for USEPA TO-15 is VOA-TO15 STL Burlington's SOP for USEPA TO-15 is LM-AT-TO14/TO15.							

QAPP Worksheet #31
(UFP-QAPP Manual Section 4.1.1)
Planned Project Assessments Table

Assessment Type	**Frequency**	**Internal or External**	**Organization Performing Assessment**	**Person(s) Responsible for Performing Assessment** (title and organizational affiliation)	**Person(s) Responsible for Responding to Assessment Findings** (title and organizational affiliation)	**Person(s) Responsible for Identifying and Implementing Corrective Actions (CA)** (title and organizational affiliation)	**Person(s) Responsible for Monitoring Effectiveness of CA** (title and organizational affiliation)
DQCR	Daily during field activities	Internal	BMcD	FSM	Ed Lindgren, BMcD, QC Coordinator	FSM and BMcD QC Coordinator	BMcD QC Coordinator
Split Sampling and Analysis Audit	QA Split Samples at 10% of Sub-Slab Soil Vapor Sampling Load	External	USACE	Sharon Shelton, BMcD, Project Chemist	Ed Lindgren, BMcD, QC Coordinator	Ed Lindgren, BMcD, QC Coordinator	Sharon Shelton, BMcD, Chemist
Split Sampling and Analysis Audit	QA Split Samples at 10% of Indoor Air Sampling Load	External	USACE	Sharon Shelton, BMcD, Project Chemist	Ed Lindgren, BMcD, QC Coordinator	Ed Lindgren, BMcD, QC Coordinator	Sharon Shelton, BMcD, Chemist

SPLIT SAMPLING AND ANALYSIS AUDIT

A split sampling and analysis audit is planned for both phases of the vapor intrusion project. QA split samples will be collected at a frequency of approximately 10 percent and submitted to the primary analysis lab (Columbia) and a QA laboratory (STL Burlington). A comparison of the data between the two laboratories will be performed following the criteria outlined on Figure 12-1.

FIELD PERFORMANCE AND SYSTEM AUDIT

At the present time, no formal field performance and system audits are planned. However, the BMcD QC Coordinator may schedule audits/reviews of field activities at various times to evaluate the execution of sample identification, sample control, COC procedures, field documentation, and sampling operations. Audits will be scheduled with the FSM. The evaluation is based on the extent to which the applicable procedures defined in the WP/SAP and QAPP are followed during field operations.

The person conducting the audit/review will be a senior technical reviewer familiar with technical, procedural, and QC requirements governing field samples. The auditor will keep a record of the evaluation using field notes. Following the audit, the auditor will review preliminary results with the FSM. The auditor will also prepare a brief report containing the results of the evaluation and recommendations for corrective actions.

PROFICIENCY TESTING SAMPLES

There are no plans to submit proficiency test samples to the laboratory at this time due to the cost prohibitive nature of obtaining air-matrix proficiency test samples. In addition, NELAP does not have proficiency testing fields of testing for the air matrix or methodology at this time as part of its laboratory certification requirements (See www.epa.gov/NELAC/pttables.html).

* * * * *

QAPP Worksheet #32
(UFP-QAPP Manual Section 4.1.2)
Assessment Findings and Corrective Action Responses

Assessment Type	Nature of Deficiencies Documentation	Individual(s) Notified of Findings (name, title, organization)	Timeframe of Notification	Nature of Corrective Action Response Documentation	Individual(s) Receiving Corrective Action Response (name, title, organization)	Timeframe for Response
Split Sampling and Analysis Audit	Written Data Comparison Memo	Robyn Kiefer, Project Manager, USACE Tracy Cooley, Project Manager, BMcD John Logigian, Project Manager, MP	One week following receipt of data	Letter	Sharon Shelton, Project Chemist, BMcD	One week following receipt of letter

ASSESSMENT FINDINGS AND CORRECTIVE ACTION RESPONSES

The findings of any assessments or audits will be provided in a brief report to the BMcD Project Manager. This brief report will contain the results of the evaluation and recommendations for corrective actions. The BMcD QC Coordinator will be responsible for ensuring that an appropriate response is made regarding the audit findings and corrective actions are implemented.

Corrective actions will be taken when deficiencies are identified. Corrective actions will be determined based on the specific deficiency and the impact of the deficiency on the technical quality of the project. Since some deficiencies are more serious than others, each deficiency will be reviewed to determine the corrective action that is most appropriate. Factors to be considered in this evaluation include the cause of the deficiency and the impact of the deficiency on project goals. An assessment will be made regarding any effect of the deficiency on project budgets, schedules, and technical adequacy; and the appropriate corrective action will be determined.

Deficiencies detected during execution of the project will be fully explained to the project team by the BMcD Project Manager, either at the time the deficiency is noted or at the scheduled project team meetings. If possible, deficiencies will be corrected "on-the-spot" in accordance with QC personnel direction. Deficiencies related to health and safety will be corrected immediately to protect worker health and safety. For deficiencies that have a significant impact on the project, an appropriate corrective action will be determined and implemented by the BMcD Project Manager following consultation with the MP and USACE-CENWK Project Managers. QC personnel will document deficiencies and how they are corrected. The Project Manager will be responsible for informing USACE-CENWK and MP of deficiencies through external reporting and direct conversations.

In the field, the FSM will be responsible for observing field activities and checking the field project team members' work for completeness, consistency, and accuracy. If a deficiency is noted, the FSM will be responsible for implementing "on-the-spot" corrections, as appropriate, to address the deficiency and to minimize future occurrence of a similar deficiency. If a deficiency cannot be easily corrected "on-the-spot", the FSM will immediately notify the BMcD Project Manager so the situation can be fully addressed and resolved. In the office, Project Team members will be responsible for checking their work products prior to submission to the BMcD Project Manager for review. The BMcD Project Manager will be responsible for reviewing completed work products and providing Project Team members with comments, corrections, and revisions.

* * * * *

QAPP Worksheet #33
(UFP QAPP Manual Section 4.2)
QA Management Reports Table

Type of Report	Frequency (daily, weekly monthly, quarterly, annually, etc.)	Projected Delivery Date(s)	Person(s) Responsible for Report Preparation (title and organizational affiliation)	Report Recipient(s) (title and organizational affiliation)
DQCR	Daily	Daily during field sampling activities	Field Site Manager, BMcD	Tracy Cooley, PM, BMcD John Logigian, PM, MP Robyn Kiefer, PM, USACE
Monthly Progress Report	Monthly	15th of each month	Ed Lindgren, QC Coordinator, BMcD John Logigian, PM, MP	Robyn Kiefer, PM, USACE
Final Interim Data Report	Once – after receipt of sub-slab soil vapor data	12/11/2006	Tracy Cooley, Project Manager, BMcD Diana Marquez, Technical Lead, BMcD	Robyn Kiefer, PM, USACE USACE Center for Expertise John Logigian, PM, MP
Final Vapor Intrusion Report	Once – after receipt of indoor air sample data	06/11/2007	Tracy Cooley, Project Manager, BMcD Diana Marquez, Technical Lead, BMcD	Robyn Kiefer, PM, USACE Leo Henning, KDHE Ken Rapplean, USEPA Restoration Advisory Board John Logigian, PM, MP
See also WP/SAP Section 2.2				

QA MANAGEMENT REPORTS

Periodic QA management reports are planned to update project team members on project status and the result of QA assessments. The following QA Management Reports are being developed for the project:

- DQCRs – WP/SAP Section 2.2.1
- Monthly Progress Reports – WP/SAP Section 2.2.2
- QCSR – WP/SAP Section 3.4

FINAL PROJECT REPORT

A Final Vapor Intrusion Report will be submitted as indicated in WP/SAP Section 2.2.4. In addition to the content listed in WP/SAP Section 2.2.4, this report will include a discussion of conformance to procedures and any major problems encountered during the project and their resolution. Additionally, a data usability assessment will be provided in the Final Vapor Intrusion Report.

* * * * *

QAPP Worksheet #34
(UFP-QAPP Manual Section 5.2.1)
Verification (Step I) Process Table

This worksheet and text describes the processes that will be followed to verify project data. *Internal* or *external* is in relation to the data generator.

Verification Input	Description	Internal / External	Responsible for Verification (name, organization)
COC and Shipping Forms	COC and shipping forms will be reviewed by the field site manager upon their completion. The documents will be verified against the sample shipment. See WP/SAP Sections 3.5.1, 3.5.2, and 3.6 for more information.	I	FSM, BMcD
DQCR	DQCRs will be reviewed by the QC Coordinator for completeness and correctness prior to submittal to USACE-CENWK and MP. See WP/SAP Section 2.2.1 for more information.	I	Tracy Cooley, Project Manager, BMcD
Field Notes and Field Forms	Field Notes will be reviewed internally and placed in the project file. See WP/SAP Sections 3.5.4 and 3.5.5 for more information.	I	Ed Lindgren, QC Coordinator, BMcD
Laboratory Data	Lab data packages will be reviewed by Columbia internally for completeness and accuracy prior to submittal. Data packages will be reviewed externally according to data validation procedures established in the QAPP (See Worksheets #35 and #36)	I E	Data Validation Coordinator, Columbia Sharon Shelton, Project Chemist, BMcD

Step I – Verification

Data Review Step I is called Verification. Verification includes a review for completeness and that all data required for the project is available.

The laboratory performs verification of data prior to its release to the customer. Columbia's data verification procedures are described in Section 13.3 of their QAM (See Appendix A) and is similar in content to three levels of data verification indicated in DoD QSM Box 42. Similar information for STL Burlington is provided in Section 5.3.6 of their QMP (See Appenix B).

Verification requires knowledge of the type of information that is reviewed. Therefore, a person familiar with field activities, such as the FSM or site geologist, is typically assigned to the review of field activities, documents, and records. Likewise, a person familiar with analytical methodology, such as a chemist, is typically assigned to the review of laboratory documents and records.

BMcD evaluates data quality through the evaluation of both field and laboratory QC data. Verification is initiated at the time of first sample collection. Field documents are reviewed by the FSM or a designee to determine that all samples and analyses were appropriately collected, containerized, labeled, and submitted to the laboratory. These items will be verified daily during sampling activities. Additionally, the project chemist or designee will be in communication with the lab during sample collection and analysis to verify condition of sample receipt, appropriate sample log-in, etc. If problems are noted at this point, they can easily be corrected or locations resampled, if needed, while the field crews are still mobilized.

* * * * *

QAPP Worksheet #35
(UFP-QAPP Manual Section 5.2.2)
Validation (Steps IIa and IIb) Process Table

This worksheet describes the processes that will be followed to validate project data. Validation inputs include items such as those listed in Table 9 of USP-QAPP Manual (Section 5.1). It describes how each item will be validated, when the activity will occur, what documentation is necessary, and the identity of the person responsible. It also differentiates between the Steps IIa and IIb of validation.

Step IIa / IIb	Validation Input	Description	Responsible for Validation (name, organization)
IIa	SOPs	Ensure that sampling and analytical SOPs were followed.	Sharon Shelton, Project Chemist, BMcD
IIa	Analytical QC Sample Data	Verify that all method-required QC samples were analyzed, and results met the method requirements.	Sharon Shelton, Project Chemist, BMcD
IIb	Field QC Sample Data	Verify that all QAPP-required QC samples were analyzed, and results met the QAPP requirements.	Sharon Shelton, Project Chemist, BMcD
IIb	QLs	Verify that the sample results met the project QLs specified in the QAPP.	Sharon Shelton, Project Chemist, BMcD

QAPP Worksheet #36
(UFP-QAPP Manual Section 5.2.2)
Validation (Steps IIa and IIb) Summary Table

This worksheet and text identifies the matrices, analytical groups, and concentration levels that each entity performing validation will be responsible for, as well as criteria that will be used to validate those data.

Step IIa / IIb	Matrix	Analytical Group	Concentration Level	Validation Criteria	Data Validator (title and organizational affiliation)
IIa	Sub-Slab Soil Vapor	VOCs by USEPA TO-15	Low	USACE – CENWK Data Quality Evaluation Guidance (see QAPP Appendix E) USEPA Method TO-15	Sharon Shelton, Project Chemist, BMcD
IIa	Indoor Air	VOCs by USEPA TO-15	Low	USACE – CENWK Data Quality Evaluation Guidance (see QAPP Appendix E) USEPA Method TO-15	Sharon Shelton, Project Chemist, BMcD
IIb	Sub-Slab Soil Vapor	VOCs by USEPA TO-15	Low	QAPP Worksheets #12, 15, 20, 23, 24, 25, and 28	Sharon Shelton, Project Chemist, BMcD
IIb	Indoor Air	VOCs by USEPA TO-15	Low	QAPP Worksheets #12, 15, 20, 23, 24, 25, and 28	Sharon Shelton, Project Chemist, BMcD

STEP II – VALIDATION

Validation includes evaluating compliance with method, procedure, or contract requirements and extends into evaluating the data against MPC that were established in the QAPP. The results of data validation will be documented in QCSRs that will be included in the Interim Data Report for sub-slab soil vapor sampling and the Vapor Intrusion Report for indoor air sampling.

QAPP Worksheet #12 provided a discussion of the DQIs (precision, accuracy/bias, sensitivity, representativeness, comparability, and completeness) that will be evaluated as part of validation. The quality of the data will be assessed through evaluation of the results of the field QC samples (trip blanks, field duplicates, and QA split samples) and laboratory internal QC samples (method blanks, surrogates, lab duplicates, and LCSs). Data qualifiers, when appropriate, will be added to the data in accordance with the *Kansas City District Data Quality Evaluation Guidance* (USACE, 2006), which is provided in Appendix E. A brief summary is presented in the following paragraphs:

- Precision – Precision will be evaluated by calculating the RPD for field duplicates, QA split samples, and laboratory duplicate samples and/or comparison of data to criteria indicated on Figure 12-1. Precision criteria outside of QC limits may result in qualification of data as estimated (J).

- Accuracy/Bias – Accuracy will be assessed by evaluating the results of spiked samples for REC and blank samples for potential contamination of samples. REC results for spike samples (surrogates and LCS) will be used to assign qualifiers to analytical data. A REC above QC limits suggests the possibility of high bias in the analytical results. A REC below QC limits suggests the possibility of low biased or false negative analytical results. Data will be qualified as estimated (J) or rejected (R) based upon the magnitude of the deviance from QC limits.

  Blank samples will be used to evaluate whether field samples have been cross-contaminated during shipping or handling. Detections in blank samples indicate the potential for high-biased or false positive data. Data will be qualified as undetected (U) or estimated (J) based upon the magnitude of the blank detection relative to the result in the field sample.

- Representativeness – Representativeness will be assessed by examining sample preservation, leak testing, results of the precision and accuracy evaluation, and adherence to method holding time. Failure of field or laboratory personnel to properly handle samples may result in qualification of the data as estimated or unusable. The representativeness review will qualitatively consider whether precision and/or accuracy are sufficient to characterize the samples. Analytical data for samples that are not analyzed within holding times will be qualified rejected (R) as indicated in Appendix E.

- Completeness – Completeness will be assessed by calculation of field completeness and laboratory completeness as presented on Worksheet #12.

- Comparability – Comparability will be assessed by evaluating QA split sample data as presented on Worksheet #12.

Step IIa Validation Activities

Step IIa validation includes evaluation of the data with MPC that were established for the applicable method and SOP. Information regarding MPC are presented on Worksheets #12, #15, #20, #23, #24, #25, and #28. Following receipt of the analytical data packages, the Step IIa validation will include review of the following items:

- Sample analysis occurred within holding time
- Method blank results
- Laboratory Duplicates
- Surrogate Recovery
- LCS Recovery

Data qualifiers, when appropriate, will be added to the data in accordance with recommendations in the *Kansas City District Data Quality Evaluation Guidance* (USACE-CENWK, 2006), which is provided in Appendix E.

Step IIb Validation Activities

Step IIb validation includes evaluation of the data with MPC that were established in the QAPP. Information regarding MPC are presented on Worksheets #12, #15, #20, #23, #24, #25, and #28 in Appendix A. Following receipt of the analytical data packages, the Step IIb validation will include review of the following items:

- Requested analyses performed using QAPP-specified method
- Trip Blanks
- Chemical leak test results
- Field Duplicates
- Achievement of project-required QLs
- Field and Laboratory Completeness
- Comparability of QA Split Samples

Data qualifiers, when appropriate, will be added to the data in accordance with the *Kansas City District Data Quality Evaluation Guidance* (USACE-CENWK, 2006), which is provided in Appendix E.

QAPP Worksheet #37
(UFP-QAPP Manual Section 5.2.3)
Usability Assessment

Data review extends beyond method, procedural, and contractual compliance to determine the quality of the data set and the types of uncertainty introduced by a failure to meet requirements. It includes a determination, where possible, of the reasons for any failure to meet requirements, and an evaluation of the impact of the failure upon the overall data set. In this manner, the effect of any data rejection is presented in terms of its impacts on the overall uncertainty and usability of the data set.

DQIs of precision, accuracy/bias, sensitivity, representativeness, comparability, and completeness provide important information regarding the overall usability of the data. If DQIs do not meet the requirements as outlined (See QAPP Worksheet #12) or problems are noted with sample collection, the data may be discarded and re-sampling may occur. The BMcD Project Manager will make this decision after consultation with the other key project personnel.

Summarize the usability assessment process and all procedures, including interim steps any statistics, equations, and computer algorithms that will be used:

See QAPP Worksheet #12 for discussion of calculation/evaluation of data quality indicators of precision, accuracy/bias, sensitivity, comparability, completeness, and representativeness.

Describe the evaluative procedures used to assess overall measurement error associated with the project:

After data validation activities have been completed, the data usability assessment will be performed by a team of personnel BMcD, including the Project Manager, Project Chemist, Technical Lead, and QC Coordinator. This team will perform a global review of the findings to determine overall usability of the data set for its intended purpose. It is at this point that a final analysis of the data is made, taking into consideration the following:

- Sample collection – Were problems encountered during sample collection that suggest samples were potentially compromised? If so, what is the impact?

- Suitability of methodology - Based upon the chemical data validation, were significant precision or bias problems noted with the data? Were significant matrix interference problems noted?

- Adequacy of reporting limits - Was excessive sample dilution required due to interference or presence of elevated concentrations of target or nontarget compounds? If so, does this adversely impact the ability to draw conclusions regarding any undetected constituents?

- Reasonableness of QC limits – Do the initially established control limits for DQIs still seem appropriate for the data set? If not, is the data exhibiting higher variability than assumed during project planning?

- Patterns in qualified data – Are patterns evident in the type of samples or analyses that required qualification during validation? Do these patterns suggest overall problems in one area or for a particular type of analysis?

Identify the personnel responsible for performing the usability assessment:

The data usability assessment will be performed by a team of personnel at BMcD. Tracy Cooley, Project Manager, will oversee the usability assessment. Supporting team members include: Sharon Shelton, Project Chemist; Diana Marquez, Technical Lead; and Ed Lindgren, QC Coordinator.

Describe the documentation that will be generated during usability assessment and how usability assessment results will be presented so that they identify trends, relationships (correlations), and anomalies:

The results of the usability assessment will be documented in within a section of the Final Vapor Intrusion Report.

* * * * *

REFERENCES

Burns & McDonnell Engineering Company, Inc. (BMcD), 2006a. *Final Quality Control Plan, Former Schilling Air Force Base, CERCLA Process Support Salina, Kansas.* May 26.

BMcD, 2006b. *Work Plan / Sampling and Analysis Plan for Vapor Intrusion Investigation, Former Schilling Air Force Base, CERCLA Process Support, Salina, Kansas.* August 22.

BMcD, 2006c. *Accident Prevention Plan / Site Safety and Health Plan for Vapor Intrusion Investigation, Former Schilling Air Force Base, CERCLA Process Support, Salina, Kansas.* August 22.

Columbia Analytical Services, Inc. (Columbia), 2005. *Standard Operating Procedure for Determination of Volatile Organic Compounds in Air Samples Collected in Specially Prepared Canisters and Gas Collection Bags by Gas Chromatography/Mass Spectrometry (GC/MS).* SOP Code: VOA-TO15, Revision 11. December 13.

Columbia, 2006. *Quality Assurance Manual for Columbia Analytical Services, Inc., Simi Valley, California*. March 7.

Department of Defense (DoD) Environmental Data Quality Workgroup, 2006. *Department of Defense Quality Systems Manual for Environmental Laboratories, Final Version 3*. January.

Intergovernmental Data Quality Task Force (IDQTF), 2005, *Uniform Federal Policy for Quality Assurance Project Plans, Parts 1, 2a, and 2b*, March.

Severn Trent Laboratories (STL), 2003. *Quality Management Plan, Revision 6*. October 17.

STL Burlington, 2006. *Standard Operating Procedure – Volatile Organic Compounds (VOCs) in Air by GC/MS, EPA Compendium Method TO-14 / TO-15., Revision 5*. April 10.

Thermo Environmental Instruments, Inc. 1996. *Model 580B Organic Vapor Meter (OVM) / Datalogger Instruction Manual.* January 9.

United States Army Corps of Engineers – Kansas City District (USACE-CENWK), 2005, *Final Remedial for Operable Unit One at the Former Schilling Air Force Base, Salina, Kansas*. September.

USACE-CENWK, 2006, *Kansas City District Data Quality Evaluation Guidance*, August 18, 2003 (Revised February 22, 2006).

USACE, 1997. *Chemical Quality Assurance for Hazardous, Toxic and Radioactive Waste (HTRW) Projects*, EM 200-1-6. October 10.

USACE, 2004. *Memorandum: Hazardous, Toxic and Radioactive Waste (HTRW) Chemical Data Quality Management Policy for Environmental Laboratory Testing*. September 30.

USACE and United States Environmental Protection Agency (USEPA), 2003. *The SEDD Specification*. The most recent format for SEDD can be found at www.epa.gov/superfund/programs/clp/sedd.htm.

USEPA, 1999. *Compendium of Methods for the Determination of Toxic Organic Compounds in Ambient Air, Second Edition, Compendium Method TO-15, Determination of Volatile Organic Compounds*

(VOCs) in Air Collected in Specially-Prepared Canisters And Analyzed by Gas Chromatography/Mass Spectroscopy (GC/MS). January.

* * * * *

APPENDIX A
Quality Assurance Manual
Columbia Analytical Services, Inc.

APPENDIX B
Quality Management Plan
Severn Trent Laboratories

(SUBMITTED ON CD)

QUALITY ASSURANCE MANUAL

for

© Columbia Analytical Services, Inc. 2006
2665 Park Center Drive, Suite D
Simi Valley, California 93065
(805) 526-7161

March 7, 2006

Approved by:

Laboratory Manager: John Yokoyama 3/7/06
John Yokoyama Date

Quality Assurance Program Manager: Lynne Nelson 3/7/06
Lynne Nelson Date

UNCONTROLLED COPY

Annual review of this QAM has been performed and the QAM still reflects current practice.

Initials: ____ Date: _____
Initials: ____ Date: _____
Initials: ____ Date: _____

DOCUMENT CONTROL

Number: _____

Initials: _____ Date: _____

Effective Date:

2.0 TABLE OF CONTENTS

Section	Revision	Heading	Page
1.0	**15.0**	**Title Page**	**1**
2.0	**15.0**	**Table of Contents**	**2**
3.0	**10.0**	**Introduction and Company Quality Assurance Policy**	**5**
4.0	**14.0**	**Program Description**	**7**
		Mission Statement	7
		Facilities and Equipment	7
		Quality System Documentation	8
		Quality Assurance Manual	8
		Standard Operating Procedures	9
		Analytical Methods	9
		Laboratory Notebooks and Records	9
		Measurement Traceability	10
		Operational Assessments	11
5.0	**9.0**	**Provision Signatures**	**16**
6.0	**9.0**	**Statement of Professional Conduct and Laboratory Practices**	**18**
		Professional Conduct	18
		Prevention and Detection of Improper, Unethical or Illegal Actions	18
		Laboratory Ethics Training Plan	19
		Laboratory Practices Affecting Personnel (Prevention of Commercial, Financial or Other Undue Pressure)	19
7.0	**14.0**	**Laboratory Organization and Responsibilities**	**21**
		Nominated Deputies	23
8.0	**14.0**	**Sample Preservation and Handling Procedures**	**25**
9.0	**11.0**	**Sample Management and Documentation**	**29**
		Sample Receiving and Acceptance	29
		Chain of Custody	30
		Sample Log In	30
		Sample Storage	31
		Sample Retention and Waste Disposal	31
10.0	**11.0**	**Quality Control Objectives (Precision, Accuracy and MDLs)**	**40**
		Demonstration of Capability	40
		Accuracy	40
		Precision	41
		Acceptance Limits and Control Charts	42
		Method Detection Limits / Method Reporting Limits	42
		Desorption Efficiency and Method Reporting Limits	42
		Completeness	43
		Representativeness	43
		Comparability	43
11.0	**13.0**	**Quality Assurance and Quality Control Policies and Procedures**	**44**
		Procurement and Approved Vendors	44

UNCONTROLLED COPY

Section	Revision	Heading	Page
11.0	13.0	Subcontract Laboratories	45
		Communications (Contracts, Complaints and Confidentiality)	45
		Document and Record Control	46
		Deviation from Standard Operating Procedures	47
		Method Modifications	48
		Procedures for Accepting New Work	48
		Quality Assurance and Control Guidelines for Performing New Work	50
		Analytical Batch	52
		Collection Efficiency	53
		Method Blank	53
		Continuing Calibration Blank	53
		Initial Calibration Verification Standard	54
		Continuing Calibration Verification Standard	54
		Calibration Standard	54
		Internal Standard	54
		Surrogate	54
		Matrix Spike	55
		Duplicates Field Sample and Duplicate Matrix Spike	55
		Laboratory Duplicate	56
		Laboratory Control Sample	56
		Field and Trip Blank	57
		Source and Preparation of Standard Reference Materials	57
		Glassware Cleaning	57
12.0	**13.0**	**Calibration Procedures and Frequency**	**58**
		Temperature Control Devices	58
		Analytical Balances	58
		Digital Pressure/Vacuum Gauges	59
		Automatic Measuring Devices	59
		Gas Chromatography/Mass Spectroscopy Systems	59
		Gas Chromatography and High Performance Liquid Chromatography	60
13.0	**13.0**	**Data Reduction, Validation, and Reporting**	**61**
		Analyte Confirmation	61
		Retention Time Windows	61
		Data Review and Reporting	61
		Quality Control Data Validation	62
		Data Qualifiers	63
		Laboratory Report Format and Contents	63
		Report Revision	66
		Report Addendum	67
		Transmission of Results and Reports	68
		Documentation	68
		Records Maintenance (Storage, Archival, Access and Retention)	69
14.0	**14.0**	**Laboratory Audits, Reviews and Accreditations**	**72**

UNCONTROLLED COPY

Section	Revision	Heading	Page
		Audits	72
		Managerial Reviews	73
15.0	**7.0**	**Instrumentation and Instrument Maintenance**	**75**
		Preventive Maintenance	75
		Out of Service Instruments	75
		New Instrumentation	76
16.0	**11.0**	**Corrective Action**	**78**
		Root Cause Analysis	79
		Preventive Action	80
17.0	**8.0**	**Quality Assurance Reports**	**82**
18.0	**10.0**	**Personnel Training**	**83**
		Qualification	83
		Employee Orientation	83
		Initial and Continuing Proficiency	83
		Environmental Health and Safety	84
		Training Needs	84
19.0	**10.0**	**References for Analytical Procedures**	**85**

Tables		*Page*
Table 7-1	Summary of Technical Experience and Qualifications	24
Table 8-1	Sample Preservation and Holding Time Requirements	26
Table 13-1	Descriptions of CAS/SIMI Data Deliverables	71
Table 14-1	Accreditations and Registrations	74
Table 15-1	Preventative Maintenance Procedures	77

Figures		*Page*
Figure 4-1	Laboratory Floor Plan	12
Figure 4-2	Extraction/Preparation Laboratory Floor Plan	14
Figure 9-1	Sample Acceptance Check Form	32
Figure 9-2	Internal Chain Of Custody	34
Figure 9-3	Service Request Form	36
Figure 9-4	Chain of Custody Form	38
Figure 16-1	Nonconformity and Corrective Action Report	81

Appendices		*Page*
Appendix A	Organizational Outline and Resumes of Key Personnel	A1-A24
Appendix B	Major Analytical Equipment	B1-B5
Appendix C	Test Methods and Standard Operating Procedures	C1-C5
Appendix D	Data Qualifiers	D1
Appendix E	Certifications	E1-E17

UNCONTROLLED COPY

3.0 INTRODUCTION AND COMPANY QUALITY ASSURANCE POLICY

Columbia Analytical Services, Inc. (CAS/SIMI) in Simi Valley, California is a professional consulting laboratory which performs chemical analyses on a wide variety of sample matrices, including indoor and outdoor ambient air, stationary source emissions, landfill gas, soil vapor, process gas, industrial hygiene samples, and product emissions. CAS/SIMI is one of eight network laboratories owned and operated by CAS Holdings, Inc. The organizational and management structure is outlined in the organization chart in Appendix A.

The objective of the CAS/SIMI quality system policy is that there will be sufficient Quality Assurance (QA) activities conducted in the laboratory to ensure that all analytical data generated and processed will be scientifically sound, legally defensible, of known and documented quality, and will accurately reflect the material being tested. In addition, avoidance of involvement in any activity that would diminish confidence in its competence, impartiality, judgment, operational integrity, or integrity of the data provided and the services rendered is a strict policy. Laboratory management is committed to ensuring fulfillment with the above stated policies and to conducting good professional practices and quality testing. This goal is achieved by ensuring that adequate Quality Control (QC) procedures are used throughout the monitoring process, and by establishing a means to assess performance of Quality Control and other QA activities.

Management has implemented a standard of service which includes but is not limited to maintaining good client communication regarding any delays or method deviations, affording clients or the client's representative cooperation to clarify requests and/or the ability to monitor the laboratory's performance associated with any work performed (while maintaining the confidentiality of other clients as stated in this document) and that tests shall always be performed in accordance with written policies, procedures and clients' requirements. In addition, whenever possible, the laboratory utilizes client feedback to continually improve its services and quality system.

Management recognizes that quality assurance requires a commitment to quality by everyone in the organization - individually, within each operating unit, and throughout the entire laboratory. CAS/SIMI is committed to ensuring that all laboratory personnel have read, understood and agree to implement and uphold accepted laboratory practices and the quality of testing services described in this document. CAS/SIMI conducts all reportable business in accordance with the appropriate procedures, policies and guidelines in this Quality Assurance Manual and other corresponding documents. The laboratory management will ensure that all documents and practices comply with the National Environmental Laboratory Accreditation Conference (NELAC) Standards, N.J.A.C. 7:18, American Industrial Hygiene Association (AIHA) LQAP Policy Document (Effective April 1, 2005), ISO/IEC 17025:1999(E), and referenced method requirements in order to maintain and uphold the degree of data quality for which these are intended. The frequency with which the laboratory will perform the procedures listed pursuant to the requirements above is specified in this document.

The information in this document has been organized according to the format described in National Environmental Laboratory Accreditation Conference (NELAC) Quality Systems Standards, June 5, 2003, ISO/IEC 17025:1999(E), *Interim Guidance for the Preparation of Quality Assurance Program*

UNCONTROLLED COPY

Plans, QAMS-004, USEPA, 1980; *Interim Guidance for the Preparation of Quality Assurance Project Plans,* QAM-005, USEPA, 1980; and *Guidance on Preparation of Laboratory Quality Assurance Plans*, USEPA, February 14, 1991. This document is controlled under the requirements specified in the *Standard Operating Procedure for Document Control.*

UNCONTROLLED COPY

4.0 PROGRAM DESCRIPTION

The concept of Quality Assurance can be extended, and is expressed in the mission statement of CAS/SIMI:

> *"The mission of Columbia Analytical Services is to provide high quality, cost-effective, and timely professional testing services to our customers. We recognize that our success as a company is based on our ability to maintain customer satisfaction. To do this requires constant attention to customer needs, maintenance of state-of-the-art testing capabilities and successful management of our most important asset - our people - in a way that encourages professional growth, personal development and company commitment."*

In support of this mission, our QA program addresses all aspects of laboratory operations, including laboratory organization and personnel, sample management, document storage, archival and disposal, critical documents and records including standard operating procedures, sample and quality control data, calibration data, standards traceability, equipment maintenance records, method proficiency data (such as method detection limit studies and control charts), and laboratory personnel training records as well as client communications such as contracts, complaints and confidentiality.

4.1 Facilities and Equipment

COLUMBIA ANALYTICAL SERVICES maintains 10,000 square feet of laboratory and office space at 2665 Park Center Drive, Suite D in Simi Valley, California. The space is divided into an instrumentation laboratory, volatiles and semi-volatiles analysis laboratory, preparation laboratory, workshop, canister conditioning laboratory, a sample receiving/sample log-in room and sample storage area and office areas. The entire unit is maintained with a security alarm system, high volume air conditioning and sufficient power for all analytical instruments.

Carrier, make-up, purge and detector gases are supplied to the laboratory instruments via a gas delivery system located in the warehouse portion of the facility. The gas delivery system is comprised of five (5) two-cylinder manifolds, which allow tanks to be changed without interruption to the gas supply. Gas purification devices and indicator tubes are housed in an enclosure located in close proximity to the instruments.

CAS/SIMI maintains a satellite extraction facility located at 8030 Remmet Avenue in Canoga Park, California. The 1300 square foot unit contains three eight-foot fume hoods and a three-ton air conditioning unit. The facility is designed with the expressed purpose of performing semi-volatile organics extraction of air, liquid and solid matrices. The extraction facility is equipped with approximately sixty-five linear feet of bench space, glassware washing equipment and materials, flammable solvent storage, sample/extract storage refrigerators and an electric kiln.

UNCONTROLLED COPY

Specialized areas include:

- Sample Management Office; Shipping and Receiving/Purchasing
- Records Archival
- Volatile Organics Analysis (GC and GC/MS)
- Semivolatiles Analysis (GC, GC/MS and HPLC)
- Ultra Low Level Volatile Organics GC/MS
- Sample Preparation Laboratory
- Canister Conditioning and Maintenance
- Flow Controller and Critical Orifice Calibration Station
- Sample, Standards and Media Storage
- Laboratory Management, Client Service, Report Generation and Administration
- Information Technology (IT)
- Waste Disposal

Figures 4-1 and 4-2 show the facility layout of our analysis and extraction/preparation laboratories respectively. The laboratory is equipped with state-of-the-art analytical and administrative support equipment. Appendix B lists the major equipment at the analytical and extraction/preparation laboratories, illustrating the laboratory's depth and overall capabilities.

4.2 Quality System Documentation

The quality system is the organizational structure, the processes and procedures necessary to ensure that the overall intentions and direction of an organization as it regards quality are met and that the quality of the laboratory's services are assured.

4.2.1 Quality Assurance Manual

The documentation of the quality system begins with this document, which contains, describes or provides reference to all of the policies and requirements needed to comply with applicable State, Federal and other governing body standards, policies and requirements.

The quality assurance (QA) manual provides the main platform for technical and administrative operations, as well as laboratory organization, procedures and policies by which the laboratory operates. The laboratory QA manual is one of many tools, including systems and analytical standard operating procedures, available to assist analytical and administrative staff in the uniform implementation of the quality system. This document outlines the company's quality assurance program as well as provides information about personnel, equipment, and facilities. In addition, it also describes in detail the policies, responsibilities and procedures, and is intended to assist analytical and administrative staff in the uniform implementation of the quality system. For references to all

UNCONTROLLED COPY

supporting procedures of the laboratory's quality system and this document refer to Appendix C.

The contents of the manual are reviewed annually by the Quality Assurance Program Manager (QAPM) and revised as needed to ensure that it continuously reflects current policies and practices. Personnel information is also updated annually as needed. The QAPM and the Laboratory Manager must approve all revisions before they are put into effect.

4.2.2 Standard Operating Procedures

Standard operating procedures (SOPs) are the tools through which the policies and procedures as expressed in the QA manual are implemented and form the next tier in the documentation of the quality system. CAS/SIMI maintains SOPs for use in both technical and administrative functions. Each SOP generated in the laboratory has been reviewed and approved by at least the Laboratory Manager and the Quality Assurance Program Manager (QAPM). Standard operating procedures may be internally written documents or copies of published methods with any changes or selected options clearly documented. In addition, certain administrative standard operating procedures are distributed by the corporate Quality Assurance Director for local implementation. These SOPs are implemented wherever and whenever necessary based on the requirements. However, any exceptions and/or additions to the requirements of these procedures are clearly detailed in the appropriate SOPs. Refer to Appendix C for a list of the laboratory's standard operating procedures.

4.2.3 Analytical Methods

In addition to SOPs, the laboratory maintains a copy of all the promulgated and non-promulgated methodology used at CAS/SIMI to perform analyses. These methods are accessible to all laboratory staff regardless of discipline. Refer to Appendix C for a list of referenced methods. This list includes both routine and non-routine methods performed at CAS/SIMI.

4.2.4 Laboratory Notebooks and Records

The third tier of the quality system can be considered to be all records generated by the system as described in Section 11.4.

Laboratory logbook entries have been standardized following the guidelines in the *Standard Operating Procedure for Making Entries into Logbooks and onto Benchsheets*. The logbook entries are reviewed (approximately 10%) quarterly by either the QAPM or Laboratory Manager (however named), or the appropriate supervisor. All logbook review deficiencies shall be discussed and documented. Logbooks are retained on file for a

UNCONTROLLED COPY

period of five years from the date of the last entry. A master list or log of all logbooks shall be maintained and must include at a minimum the logbook identification, type, start and end dates and archival date.

4.3 Measurement Traceability

Traceability is defined as the property of a measurement result or value of a standard which can be related to stated references through an unbroken chain, each with stated uncertainties and is documented for all material used to perform calibrations. The documentation, a certificate of analysis containing, at a minimum, the manufacturer, address, accreditation number (where applicable), how traceability was achieved, the traceable values, their associated uncertainty, and the unique serial or laboratory identification number of the equipment or standard reference material (SRM) shall serve as initial point in the chain of traceability. The unique serial number or laboratory identification number is used throughout the laboratory to trace equipment and materials back to the original certificate of analysis.

All metrology equipment (with unique serial numbers) including analytical balances and weights, thermometers and digital pressure/vacuum gauges are calibrated annually using SRMs traceable to the National Institute of Standards and Technology (NIST). All calibration information for this equipment is kept on file by the laboratory. Refer to Section 11.1 on the evaluation and approval of suppliers of critical services.

Consumable SRMs routinely purchased by the laboratory (e.g. primary stock standards) are purchased from nationally recognized, reputable vendors. Most vendors have fulfilled the requirements for ISO 9000 series certification and/or are accredited by American Association of Laboratory Accreditation (A_2LA). Certificates of Analysis and Statements of Accuracy provided by the vendors of reference materials are retained. Traceability for consumable SRMs as well as the procedure for approval of vendors of critical consumables and supplies is accomplished by following the requirements set forth in the corresponding *Standard Operating Procedure for Receipt, Preparation and Tracking of Standards, Reagents and Media*. Nevertheless, the procedure requires that each standard reference material, upon receipt, is given a unique identification code and this number is utilized throughout the standard preparation, analytical, reporting, and disposal processes. This is performed to ensure that all analytical data is traceable to the standard and/or standards information involved in producing the data including standard preparation, storage, expiration date, and vendor. It may be noted that atmospheric air is a natural standard and is used with the same confidence as traceable standards.

If particular traceable standards do not exist, then the laboratory uses certified reference materials provided by a competent supplier otherwise able to provide reliable chemical characterizations of materials.

UNCONTROLLED COPY

4.4 Operational Assessments

There are a number of methods used to assess the laboratory and its daily operations. In addition to the routine quality control (QC) measurements used by a laboratory to measure quality, the senior laboratory management staff at CAS/SIMI examines a number of other indicators to more accurately assess the overall ability of the laboratory to successfully perform those analyses requested by clients. These indicators include the ability of the laboratory to carry out analyses with regards to available equipment and personnel. This assessment is carried out through an annual management review of instrumentation, personnel and sample load. In addition, the management review includes a list of analytes for which the laboratory offers analyses versus those additional analytes requested and analyzed over the previous year. At the discretion of management, analyte or analytes may be added to the routine list(s) offered. This decision is based in part to the number of requests received, the costs of standards and suitability of adding the analyte to the existing standard.

A frequent, routine assessment must also be made of the laboratory's facilities and resources in anticipation of accepting an additional or increased workload. CAS/SIMI utilizes a number of different methods to insure that adequate resources are available in anticipation of the demand for service. Regularly scheduled staff meetings, tracking of outstanding proposals and an accurate, current synopsis of incoming work all assist the senior staff in properly allocating resources to achieve the required results. This process is more extensively detailed in Section 11.4 of this document and in the *Standard Operating Procedure for Project Management and Business Development.*

UNCONTROLLED COPY

Figure 4-1
CAS/SIMI Analysis Laboratory Floor Plan

UNCONTROLLED COPY

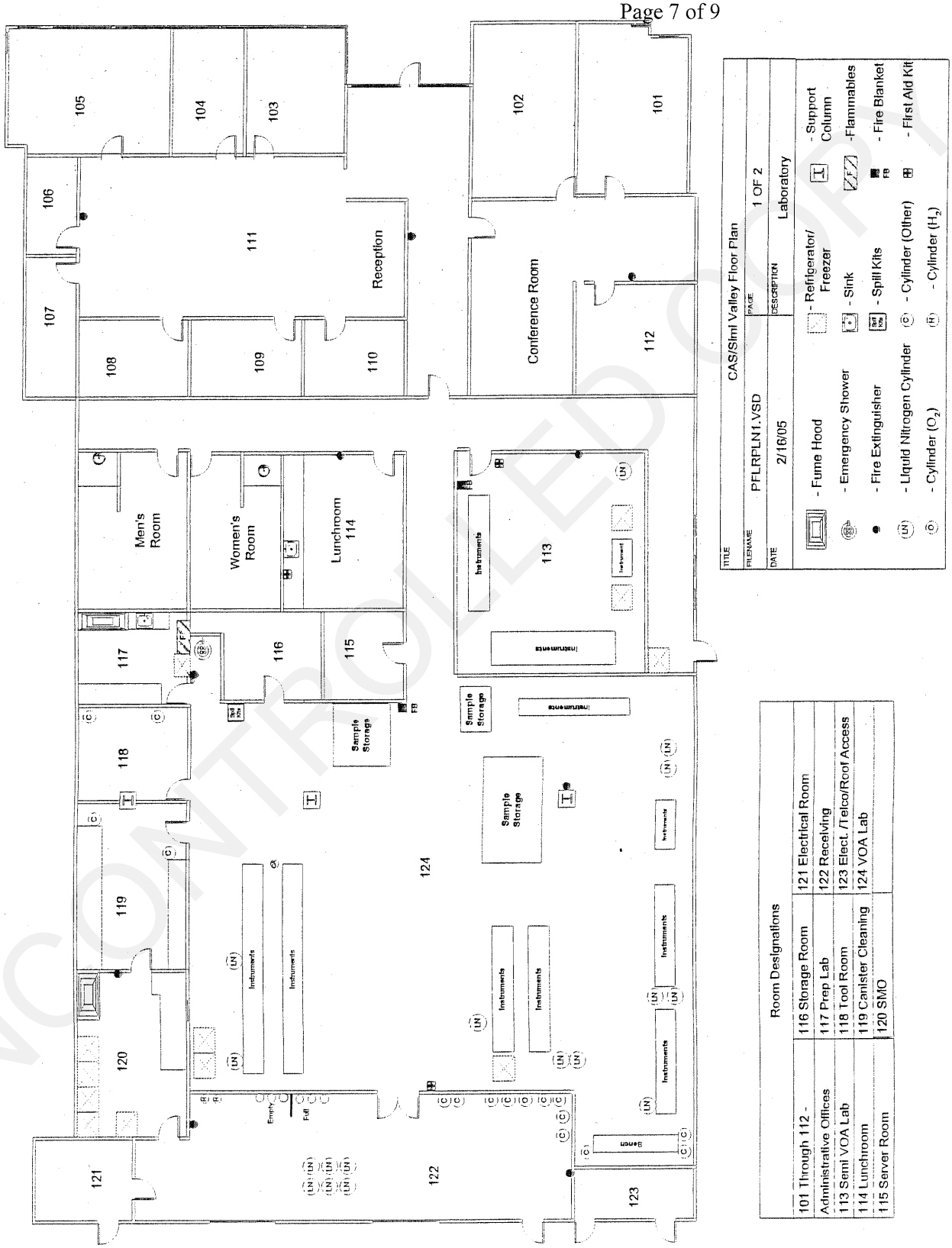

UNCONTROLLED COPY

Figure 4-2
CAS/SIMI Sample Extraction/Preparation
Laboratory Floor Plan

UNCONTROLLED COPY

CAS/Simi Extractions Laboratory
8020 Remmet Avenue, Canoga Park, CA

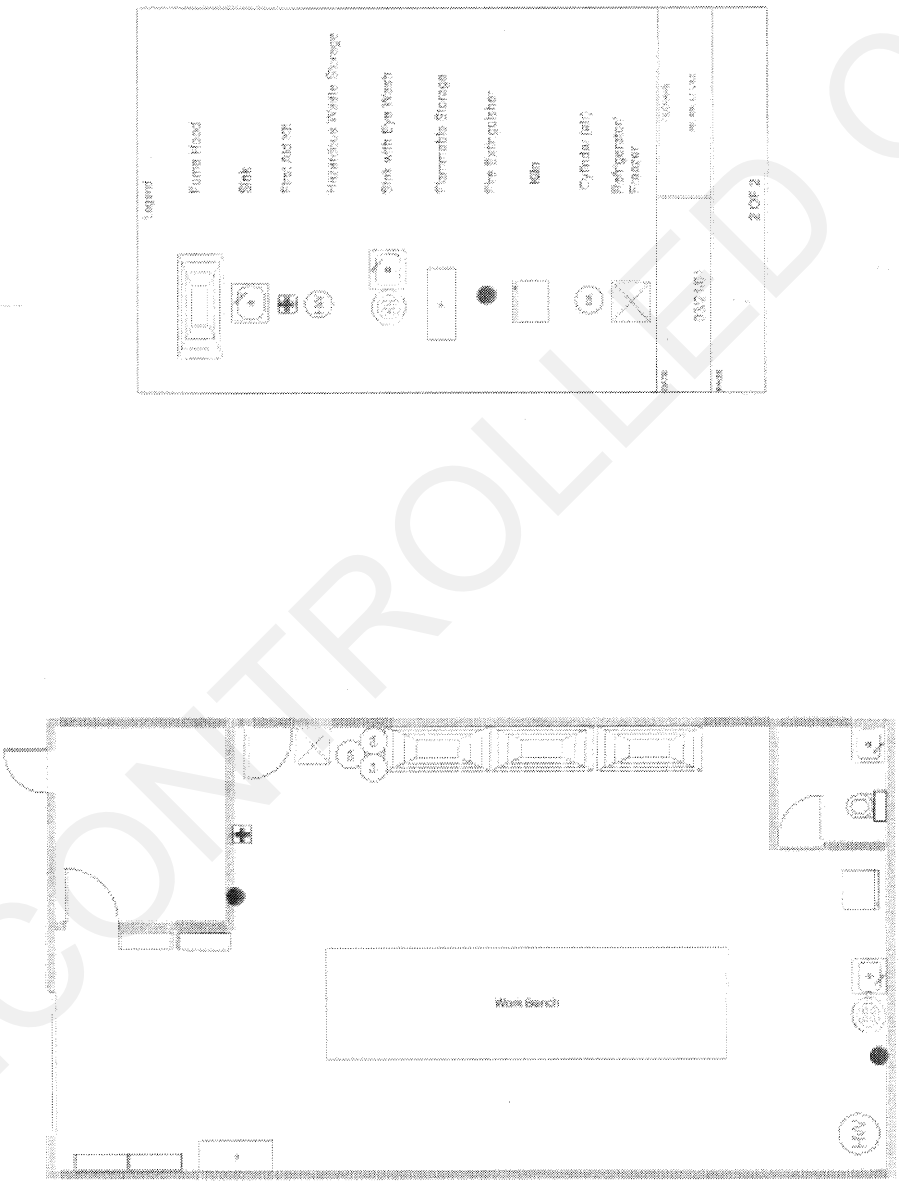

UNCONTROLLED COPY

5.0 PROVISION SIGNATURES

The undersigned are all key personnel responsible for planning, implementing, maintaining and improving the Quality Assurance (QA) activities conducted within Columbia Analytical Services.

John Yokoyama Laboratory Manager	Initials
Michael Tuday Director of Research and Development	MT Initials
Lynne Nelson Quality Assurance Program Manager	LN Initials
Ku-Jih Chen Director of Technology Development	KJC Initials
Wade Henton Team Leader (VOC GC)	WH Initials
Chris Parnell Team Leader (VOC GC/MS)	CP Initials
Madeleine Dangazyan Team Leader (Semi-volatile)	MD Initials
Rusty Bravo Chemist	RB Initials
Aristotle Bragasin Chemist	AB Initials
Ku Chung Chemist	KC Initials
Regan Lau Chemist	RL Initials
Zheng Wang Chemist	ZW Initials

UNCONTROLLED COPY

Rebecca Berdine — RSB
Rebecca Berdine — Initials
Chemist

Chaney Bolster — CB
Chaney Bolster — Initials
Chemist

Liliana Marghitoiu — LM
Liliana Marghitoiu — Initials
Chemist

Robin Gill — RG
Robin Gill — Initials
Data Validation Coordinator – Team Leader

Michelle H. Sakamoto — MS
Michelle Sakamoto — Initials
Data Validation Coordinator

On file
Kelly Horiuchi — Initials
Project Manager

Kathleen Aguilera — KA
Kathleen Aguilera — Initials
Project Manager

On file
Nicole DeMorin — Initials
Business Development/Project Manager

Manny Zamora — Initials
Sample Management Supervisor

Robert De La O — Initials
Systems Analyst / IT & Alternate
Sample Management Coordinator

Shreejana Signh — SSM
Shreejana Signh — Initials
Systems Analyst

Llensenia Cercado — LC
Llensenia Cercado — Initials
Technician & Alternate Sample
Management Coordinator

UNCONTROLLED COPY

6.0 STATEMENT OF PROFESSIONAL CONDUCT AND LABORATORY PRACTICE

One of the most important aspects of the success of CAS/SIMI as a company is the emphasis placed the avoidance of involvement in any activity that would diminish confidence in its competence, impartiality, judgment, operational integrity, or integrity of the data provided and the services rendered. This success is reliant on both the professional conduct of all employees within CAS/SIMI as well as established laboratory practices.

6.1 Professional Conduct

To promote quality, CAS/SIMI requires certain standards of conduct and ethical performance among employees. The following examples of documented CAS/SIMI policy are representative of these standards, and are not intended to be limiting or all-inclusive:

- Under no circumstances is the willful act of fraudulent manipulation of analytical data condoned. Such acts are to be reported immediately to senior management for appropriate corrective action.

- Unless specifically required in writing by a client, alteration, deviation or omission of written contractual requirements is not permitted. Such changes must be in writing and approved by senior management.

- Falsification of data in any form will not be tolerated. While much analytical data is subject to professional judgment and interpretation, outright falsification, whenever observed or discovered, will be documented, and appropriate remedies and punitive measures will be taken toward those individuals responsible.

- Unauthorized release of confidential information about the company or its clients is taken very seriously and is subject to formal disciplinary action.

6.2 Prevention and Detection of Improper, Unethical or Illegal Actions

It is the intention of CAS/SIMI to proactively prevent and/or detect any improper, unethical or illegal action conducted within the laboratory. This is performed by the implementation of a program designed for not only the detection but also prevention. Prevention consists of educating all laboratory personnel in their roles and duties as employees, company policies, inappropriate practices, and their corresponding implications as described in Section 6.3 of this document.

In addition to education, appropriate and inappropriate practices are included in SOPs such as manual integration, data review and specific method procedures. Other aspects of this program

UNCONTROLLED COPY

include electronic data tape audits, post-analysis and whenever possible single blind and/or double blind analyses. All aspects of this program is documented and retained on file according to the company policy on record retention.

6.3 Laboratory Ethics Training Plan

Laboratory ethics training (approximately 8-hours) is held annually for every new on-site employee including all full and part time personnel. The training session includes at a minimum the following legal and ethical topics:

- Triggers and types of unethical behavior
- CAS Employee Handbook (overview including mechanism for reporting and seeking advice on ethical decisions)
- CAS' Commitment to Excellence in Data Quality (overview including legal consequences)
- Measures taken to prevent and detect fraud
- Examples of data falsification or misrepresentation
- Acceptable and unacceptable solutions to typical laboratory problems
- Data validation
- Implications of laboratory data fraud
- Potential punishments and penalties for improper, unethical or illegal actions

It is the responsibility of the Quality Assurance Program Manager to ensure that the training plan described in this section including content and frequency is conducted. All employees may review the mechanism for reporting and seeking advice on ethical decisions as well as the legal consequences of unethical behavior in the CAS Employee Handbook & CAS Commitment to Excellence in Data Quality Statement, both of which are available to all employees. In addition, the Excellence in data Quality Statement is reviewed and signed on an annual basis by all laboratory personnel. Also, all employees are required to complete a quarterly ethics "refresher" training (approximately 1-hour) session. The subject and content are generally at the discretion of the Corporate Quality Assurance Department.

6.4 Laboratory Practices Affecting Personnel

CAS/SIMI makes every attempt to ensure that employees are free from any commercial, financial, or other undue pressures that might affect their quality of work. This is accomplished by utilizing each of the following policies, programs and procedures, wherever necessary.

- CAS Corporate Ombudsman (CAS Employee Handbook) – An assigned employee of CAS works to ensure that CAS employees have access to information about their rights and available resources; to receive problems from employees and obtain factual information about their problems; to provide employees with protections of their rights; and assure that

UNCONTROLLED COPY

employees are receiving fair treatment. The ombudsman serves as an informal problem solver to reduce tensions.

- Open Door Policy (CAS Employee Handbook) – Employees are encouraged to bring any work related problems or concerns to the attention of local management or their Human Resources representative. However, depending on the extent or sensitivity of the concern, employees are encouraged to directly contact any member of upper management.
- Project Scheduling – Jobs are scheduled (when prior notice is available) according to the *Standard Operating Procedure for Project Management and Business Development* as well as Section 11 of this Quality Assurance Manual. The scheduling is done not only to prevent missed holding times and on-time deliveries but as a way for management and analysts to be prepared for incoming samples and to utilize flexible work schedules, whenever necessary.
- Laboratory Capacity – The maximum number of samples that can be analyzed on a single instrument in a typical eight-hour day (per analysis) has been determined. This number is located in each specific method Standard Operating Procedure and is useful in informing both analysts and management of the number of samples which can typically be analyzed in an eight hour day. This is used to evaluate analysts against unethical practices, impossible work expectations as well as project scheduling.
- Flexible Work Hours – Analysts are able to work flexible work hours (with management approval). Additionally, analysts may "team" with a co-worker (again with approval) and work split shifts in order to extend the work day and increase the number of samples that can be analyzed, whenever necessary.
- Gifts and Favors (CAS Employee Handbook) – To avoid possible conflict of interest implications, employees do not receive unusual gifts or favors to, nor accept such gifts or favors from, persons outside the Company who are, or may be, in any way concerned with the projects on the Company is professionally engaged. Anything beyond an occasional meal, an evening's entertainment, or a nominal holiday gift is considered an "unusual gift or favor".

UNCONTROLLED COPY

7.0 LABORATORY ORGANIZATION AND RESPONSIBILITIES

The CAS/SIMI staff, consisting of approximately 30 employees, includes management, chemists, technicians and support personnel. They represent diverse educational backgrounds and experience, and provide the comprehensive skills that a modern analytical laboratory requires.

CAS/SIMI is committed to providing an environment that encourages excellence. Everyone within CAS/SIMI shares responsibility for maintaining and improving the quality of our analytical services. The responsibilities of key personnel within the laboratory are described below. Table 7-1 lists the CAS/SIMI personnel assigned to these key positions. All managerial staff members are provided the authority and resources needed to perform their duties. The Quality Assurance program is completely independent of the laboratory and is managed in such as way as to prevent any conflict of interest. An organizational chart of the laboratory, as well as the resumes of these key personnel, can be found in Appendix A of this document. Minimum qualifications for each position listed below are on file in the laboratory and are available for review.

- The role of the **Laboratory Manager** is to provide the overall technical, operational, and administrative leadership through planning, allocation and management of financial, personnel and equipment resources. This person is responsible for ensuring quality, overall laboratory efficiency, and financial performance of the CAS/SIMI facility. The **Laboratory Manager** is also responsible for ensuring that quality control functions are carried out as planned and to guarantee the production of high quality data. The OM is also required to perform direct report laboratory personnel work reviews. The OM has the responsibility of working with the Project Managers on scheduling conflicting client projects and the Quality Assurance Program Manager to ensure compliance with all company procedures and policies and standards for all accreditations (i.e. NELAC Chapter 5, AIHA Policies and ISO/IEC 17025:1999(E)).
- Additionally, each department (GC, GC/MS, and Semi-Volatile) has a **Team Leader** which is required to perform laboratory personnel work reviews, schedule programs such as method detection limit studies and training, review corrective action reports and implement necessary actions to prevent any reoccurrence, and coordinate sample analysis scheduling with respect to holding times and client requirements. In addition, the team leader is responsible for evaluating and approving team work shifts and vacation requests, monitoring in-house projects including on-time delivery and data review, ensuring that all annual and semi-annual quality control and assurance activities are completed and approved. The team leader also has the responsibility of occasionally working with the Project Managers on scheduling conflicting client projects and the Quality Assurance Program Manager on certain quality issues and any implementation as needed, as they directly relate to the laboratory.
- The **Director of Research and Development** is required to identify and develop new markets and technologies, and manage the implementation of such endeavors through support of the **Director of Technology Development.** It is also the responsibility of the Director of R&D to manage business development and those individuals responsible for this role.

UNCONTROLLED COPY

- The responsibility of the **Quality Assurance Program Manager** is to provide a focus for overall QA activities within the laboratory. This person works with individual laboratory production units to establish effective quality control and assessment plans. The QAPM is also responsible for identifying and responding to QA problems, needs and requests from the technical staff and ensuring compliance with all company procedures and policies and standards for accreditation (i.e. Chapter 5, AIHA Policies and ISO/IEC 17025:1999(E)). This person is a technical advisor and is responsible for summarizing and reporting overall unit performance, including round-robin programs, certification and accreditation activities, and blind and reference sample analyses. In addition, the QAPM has the responsibility and authority for ensuring that the quality system is implemented and followed at all times; the QAPM has direct access to the highest level of management at which decision are made on laboratory policy and resources.
- The **Environmental Health and Safety Coordinator** is responsible for the administration of the laboratory health and safety policies. This includes the formulation and implementation of safety policies, the supervision of new-employee safety training, the review of accidents, incidents and prevention plans, the monitoring of hazardous waste disposal and the conducting of departmental safety inspections.
- **Information Technology** (IT) staff is responsible for the administration of the laboratory support services. Other functions of the IT staff include laboratory network maintenance, education of analytical staff in the use of scientific software, custom software development and implementation, Electronic Data Deliverable (EDD) generation and data back up, archival and integrity operations.
- The Analytical Laboratory is divided into operational units, based upon specific disciplines. Each department (VOC/Gas Chromatography, Gas Chromatography/Mass Spectroscopy and Semi-Volatile Organics) is responsible for establishing, maintaining and documenting a quality control program based upon the unique requirements within that department. Each **Chemist** and/or **Technician** in the laboratory has the responsibility to carry out testing according to current prescribed methods, standard operating procedures and quality control guidelines particular to the laboratory in which he/she is working.
- The **Sample Management Supervisor (SMS)** and alternates play a key role in the laboratory QA program by performing sample receiving, acceptance, and log-in procedures. The SMS also maintains documentation for all samples received by the laboratory.
- The **Project Manager (PM)** is a senior-level scientist assigned to act as a technical liaison between the client and the laboratory. The PM is responsible for ensuring that the analyses performed by the laboratory meet all project, contract, and regulatory-specific requirements. This entails coordinating with the CAS/SIMI laboratory and administrative staff to ensure client-specific needs are understood, and that the services CAS/SIMI provides are properly executed and satisfy the requirements of the client.
- The **Data Validation Coordinator** is responsible for data review, data package preparation, review and coordination of QC reports, and preparation of case narratives (based on the information provided by the laboratory).

UNCONTROLLED COPY

- The **Disposal Technician** is responsible for coordinating for the appropriate disposal of spent chemicals, sample extracts and other hazardous wastes. In addition, the Disposal Manager has the responsibility for the proper disposal of solids, liquids and air samples in Tedlar bags and canisters.

7.1 Nominated Deputies

Deputies will be nominated just prior to each scheduled absence of the Laboratory Manager and/or Quality Assurance Program Manager. The following personnel are designated in the case of an unscheduled absence.

Acting Laboratory Manager ..... Director of Research and Development
Acting Quality Assurance Program Manager ..... Team Leader (VOC GC/MS)

UNCONTROLLED COPY

Table 7-1
Summary of Technical Experience and Qualifications

Personnel	Years of Experience	Project Role
John G. Yokoyama, B.S.	19	Laboratory Manager
Michael Tuday, B.S.	25	Director of Research and Development
Ku-Jih Chen, B.S.	30	Director of Technology Development
Lynne Nelson, B.S.	14	Quality Assurance Program Manager
Kathleen Aguilera, B.A.	16	Project Manager
Kelly Horiuchi, B.A.	5	Project Manager
Nicole DeMorin, B.A., M.B.A.	11	Business Development/Project Manager
Wade Henton, B.S.	19	Team Leader (VOA GC)
Christopher J. Parnell, B.S.	19	Team Leader (VOA GC/MS)
Madeleine Dangazyan, B.S.	10	Team Leader (Semi-Volatiles); Environmental Health and Safety Coordinator)
Chaney Bolster, B.S.	3	Analytical Chemist
Aristotle Bragasin, B.S.	10	Analytical Chemist
Liliana Marghitoiu, B.S.	2	Analytical Chemist
Ku Chung, B.S.	5	Analytical Chemist
Regan Lau, B.S.	8	Analytical Chemist
Rusty Bravo, B.S.	13	Analytical Chemist
Zheng Wang, B.S., M.S.	17	Analytical Chemist
Rebecca Berdine, B.S.	6	Analytical Chemist
Robert De La O	15	Systems Analyst/IT and Alternate Sample Management Coordinator
Robin Gill	25	Data Validation Coordinator – Team Leader (Sample Management and Reporting)
Michelle Sakamoto, B.A.	10	Data Validation Coordinator
Llesenia Cercado	5	Technician & Alternate Sample Management Coordinator
Manny Zamora	3	Sample Management Supervisor

UNCONTROLLED COPY

8.0 SAMPLE PRESERVATION AND HANDLING PROCEDURES

The sample handling factors that must be taken into account to ensure accurate, defensible analytical results include:

- Amount of sample taken
- Type of container used
- Existence and type of sample preservation
- Sample storage
- Holding time
- Proper custodial documentation

The quality of analytical results is highly dependent upon the quality of the procedures used to collect, preserve and store samples. CAS/SIMI recommends that clients follow sampling guidelines described in the specific reference methods including EPA, NIOSH, OSHA, ASTM, CARB and SCAQMD. Since a number of tests performed are for compliance to federally promulgated rules and regulations, it is important to consult and obtain approval for sampling and analytical guidelines from the appropriate state or local regulatory agency prior to sampling. When transporting samples to the laboratory, the most expedient but lawful route of transport should be utilized. Also, the hazardous potential of the samples needs to be considered when shipping samples via air freight or passenger airlines.

CAS/SIMI uses the sample preservation, container, and holding time recommendations published in a number of referenced documents. The complete citation for each reference can be found in Section 19 of this document. The appropriate container, preservation and holding time information are summarized in Table 8-1. However, specific information on this matter is addressed in each corresponding method SOP.

CAS/SIMI routinely provides sample containers with appropriate preservatives (where necessary) to clients. These containers include 40mL vials, Summa canisters, silica-gel tubes, etc. Certificates of Analysis are retained (where available) for purchased media. These procedures follow the requirements detailed in the *Standard Operating Procedure for Analysis Scheduling and Requests for Sample Media*. Canisters are evacuated and cleaned in accordance with the *Standard Operating Procedure for Cleaning and Certification of Summa Canisters and Other Specially Prepared Canisters.*

UNCONTROLLED COPY

TABLE 8-1

Determination/Method	Matrix	Container	Preservation	Holding Time	Sample Vol.
Amines	Air	Treated Alumina Tubes	Laboratory Storage - 4°C±2°C	30 days	100L
BTEX / Modified CARB 410	Air	Tedlar Bag, Mylar Bag, Summa Canister	No Direct Sunlight	Bags – 72 hours; Canisters – N/A	500mL
BTU / ASTM D 3588	Gaseous Fuels	Tedlar Bag, Mylar Bag, Summa Canister	See Associated Methods	Bag – 24 hours; Canisters – 24 hours	See Associated Methods
C_1-C_6+ / Modified TO-3	Air	Tedlar Bag, Mylar Bag, Summa Canister	N/A	Bag – 72 hours; Canister – N/A	Bags – 500mL; Canisters – 5.0L
Carbonyl Compounds/ TO-11A	Air	DNPH-Coated Silica Gel Cartridge w/ Polypropylene Cap; SKC UME^x and Bacharach GMD 570 Passive Monitors (formaldehyde only)	Sample Receipt - 4°C±2°C; Laboratory Preservation 4°C±2°C	14 days until extraction; 30 days for analysis	100 – 150L
Carboxylic Acids	Air	Treated Silica Gel Tubes	Laboratory Storage - 4°C±2°C	30 days	100L
EPA 25C/Total Gaseous Non-methane Organics (TGNMO)	Air	Tedlar Bag, Mylar Bag, Summa Canister	N/A	Bag – 72 hours; Canister – N/A	5.0L
Fixed Gases / EPA 3C & ASTM D 1946	Air	Tedlar Bag, Mylar Bag, Summa Canister	N/A	Bag – 72 hours; Canister – N/A	Bags – 500mL; Canisters – 5.0L
Helium & Hydrogen	Air	Tedlar Bag, Mylar Bag, Summa Canister	N/A	Bags – 72 hours; Canisters – N/A	Bags – 500mL; Canisters – 5.0L
Massachusetts Air-Phase Petroleum Hydrocarbons, Public Comment Draft 1.0	Air	Summa Canister	N/A	28 days	5.0L

UNCONTROLLED COPY

Determination/Method	Matrix	Container	Preservation	Holding Time	Sample Vol.
Modified EPA Method 8315A (Procedure 1)	Aqueous, Soil	Glass w/Teflon-Lined Lid	All samples - @ 4°C±2°C	Aqueous – prep. - 72 hours, analysis - 72 hours; Soil – prep. minimum, analysis - 72 hours	(2) 40mL Vials
NCASI – DI/MeOH 94.03/Methanol	Aqueous – Effluent	Glass w/Teflon-Lined Lid	No Headspace; 4°C±2°C; HCl to pH 2-3 (Effluent only)	30 days	(1) 40mL Vial
NCASI-DI/HAPS-99.01	Aqueous – Effluent	Glass w/Teflon-Lined Lid	No Headspace; 4°C±2°C	14 days	(1) 40mL Vial
NCASI-IM/CAN/WP-99.02	Air	Summa Canister	N/A	3 Weeks	5.0L
Organic Vapors / NAPHTHAS (Diesel; etc.) NIOSH 1550 / OSHA 7	Air	Charcoal Tube; 3M 3500 or 3520 Badge; Silica Gel Tube w/ plastic caps	N/A	14 days	Various
RSK 175/Methane, Ethane, Ethene, Propane, Propene, O_2, & CO_2	Aqueous	Glass w/Teflon-Lined Lid	No Headspace; HCl to pH<2 (CO_2 – basic pH); 4°C±2°C	14 days	(3) 40mL Vials
Sulfur / In-House Method	Aqueous	Glass w/Teflon-Lined Lid	No Headspace; pH>4; 4°C±2°C	Following pH adjustment – 24 hours	(2) 40mL Vials
Sulfur Gases / Modified SCAQMD 307 & ASTM D 5504	Air	Tedlar Bag, Fused Silica Lined SS Canister	No direct sunlight	Bag – 24 hours; Canister- 7 days	Bags – 500mL; Canisters – 3.0L
TO-13A/Polycyclic Aromatic Hydrocarbons (PAHs)	Air	Polyurethane Foam (PUF) plugs, XAD Tube, PUF/XAD-2	Sample Receipt - <4°C; Laboratory Preservation 4°C±2°C	7 days until extraction; 40 days after	130 – 400 m^3
TO-14A & TO-15/VOC	Air	Tedlar Bag, Mylar Bag, Summa Canister	N/A	Bag – 72 hours; Canister- 30days	5.0L

UNCONTROLLED COPY

Determination/Method	Matrix	Container	Preservation	Holding Time	Sample Vol.
TO-17/VOC	Air	Sorbent Tubes w/Swagelock Caps & PTFE Ferrules	<4°C; organic solvent free environment; Laboratory Storage 4°C±2°C	30 days	1-4L
TO-2 (as modified TO-15)/VOC	Air	Sorbent Tubes w/Swagelock Caps & PTFE Ferrules	<4°C; organic solvent free environment; Laboratory Storage 4°C±2°C	Desorb into Tedlar Bag- 7 days; Analyze – 72 hours	10L
TO-3 Modified/Methanol, Ethanol, Isopropyl alcohol, Freon, and Methylene chloride	Air	Tedlar Bag, Mylar Bag, Summa Canister	N/A	Bag – 72 hours; Canister – N/A	Bags – 500mL; Canisters – 5.0L
TO-3 Modified/Total Petroleum Hydrocarbons (TPHG)	Air	Tedlar Bag, Mylar Bag, Summa Canister	N/A	Bag – 72 hours; Canister – N/A	Bags – 500mL; Canisters – 5.0L
TO-4A & TO-10A/Pesticides and Polychlorinated Biphenyls (PCBs)	Air	Glass PUF and PUF/XAD-2 Cartridge; TO-4A (High Volume); TO-10A (Low Volume)	Sample Receipt - 4°C±2°C; Store sample and extract @4°C±2°C	7 days until extraction; extract – 40 days	2 m^3

UNCONTROLLED COPY

9.0 SAMPLE MANAGEMENT AND DOCUMENTATION

Standard operating procedures have been established for all aspects of sample management within the laboratory including sample receiving, acceptance, log-in, storage and disposal. These procedures ensure that samples are handled properly and that all associated documentation is complete and consistent.

9.1 Sample Receiving and Acceptance

It is the policy of CAS/SIMI to check each sample delivered to the Sample Management Office and received by the Sample Management Supervisor or alternates against certain acceptance criteria. This policy is available to all sample management personnel for reference. Any samples, which deviate from these outlined areas, will be clearly flagged with the nature and substance of the deviation. The Sample Acceptance Check Form (see Figure 9-1) is used to document the condition of the sample container (i.e., cooler temperature, preservation, etc.) and its contents as received by the laboratory. The following are the criteria utilized by CAS/SIMI for the acceptance or rejection of samples.

- Sample submission documents are properly used, fully completed (in ink) and shall include the client, sample identification, project name or location, date and time of collection, collector's name, sample type, preservation type (if applicable) and any special remarks concerning the sample.
- Proper sample labeling is considered a unique sample identification (ID), durable labels (labels that are not easily removed) and the use of ink.
- Sample containers checked for integrity (broken, leaking, Tedlar® bags are received flat, under inflated or with the valve open, Summa canisters are received under substantial vacuum or with the valve open, etc.)
- Sample container labels and/or tags agree with the sample documentation (canister & client IDs).
- Adherence to specified holding times (see Table 8-1, Method Specific SOP, or Quality Assurance Project Plan)
- Appropriate containers (size, type) are received for the requested analyses (see Table 8-1 or Method Specific SOP)
- Proper temperature of sample containers, if applicable (see Table 8-1 or Method Specific SOP).
- Adequate sample volume (see Table 8-1)
- Assessment of proper sample preservation, where applicable (see Table 8-1 or Method Specific SOP).

UNCONTROLLED COPY

Any abnormalities or discrepancies observed during the initial assessment including signs of damage are documented and are addressed by informing the appropriate Project Manager (PM) which may in turn contact the client to discuss the pertinent issues. The procedures for handling such deviations from the sample acceptance policy are discussed in detail in the *Standard Operating Procedure for Sample Receiving, Acceptance and Log-in.* This procedure is also in place to ensure samples are received and properly logged into the laboratory, and that all associated sample documentation, including COCs (if utilized), is complete and consistent with the samples received.

9.2 Chain of Custody

The original Chain of Custody (COC) forms are retained and kept with the job file. These forms may be identical to the one issued by CAS/SIMI (see Figure 9-4) or clients may submit samples using a similar form.

Legal (internal) Chain of Custody protocols are followed at the request of clients. Where necessary, the sample management supervisor (SMS) or designee generates an internal chain of custody (see Figure 9-2) upon sample receipt and relinquishes custody to an analyst of a particular department for which he/she is responsible. This COC is utilized to document all sample custody transfers through the laboratory (initial receipt through final disposal).

9.3 Sample Log-in

Each sample is given a computer generated unique laboratory code when the Service Request Form (see Figure 9-3) is completed. This code is given based upon the order of sample log-in. The service request contains the laboratory code, client information, client sample descriptions/identification, sample matrix information, requested analyses, sample collection dates, and analysis due dates as well as other useful information.

A laboratory code label is generated and affixed to the sample, where possible. Certain sample containers, such as solid adsorbent cartridges, are placed in a sealed bag identified with the service request number and all laboratory codes (samples) associated with that particular service request number. If replicate samples are submitted, the following procedure is used to differentiate between the separate containers of the submitted field sample:

e.g. Original Sample ..... Laboratory Code P2601952-001
Replicate One..... Laboratory Code P2601952-001B
Replicate Two..... Laboratory Code P2601952-001C

P	PAI (Former Name of Laboratory)
26	Year 2006
01952	Job Number (1952nd job logged in Year 2006)
01	1st sample logged in for specified job

UNCONTROLLED COPY

9.4 Sample Storage

Documented procedures are in place, which detail the laboratory facilities and methods used to avoid deterioration, contamination, or damage to the sample during storage, handling, preparation, and testing. Samples shall be stored away from all standards, reagents, food and other potentially contaminating sources. Also, samples are stored in such a manner as to prevent cross contamination.

To prevent a preservation error the refrigerators and freezers are segregated according to matrix type and in some cases method of analysis. The temperature of each thermal storage unit used at CAS/SIMI is monitored daily (business days), using a NIST traceable thermometer, and the data is recorded in a bound logbook. The procedures for maintaining the integrity of the refrigerators/freezers are detailed in the *SOP for Laboratory Sample Storage, Analysis and Tracking.*

9.5 Sample Retention and Waste Disposal

All hazardous waste samples are disposed of according to formal procedures outlined in the *Standard Operating Procedure for Waste Disposal.* Upon completion of all analyses, the laboratory samples are retained in accordance with the requirements specified in the method SOPs and the *SOP for Waste Disposal.* The samples are either returned to the client or disposed of according to approved disposal practices. All samples are characterized according to hazardous/non-hazardous waste criteria and are segregated accordingly. It should be noted that all wastes produced at the laboratory, including the laboratory's own various hazardous waste streams, are treated in accordance with all applicable local, State and Federal laws.

UNCONTROLLED COPY

UNCONTROLLED COPY

Figure 9-1
Sample Acceptance Check Form

Columbia Analytical Services, Inc.
Sample Acceptance Check Form

Client: _____ Work order: _____
Project: _____
Sample(s) received on: _____ Date opened: _____ by: _____

Note: This form is used for all samples received by CAS. The use of this form for custody seals is strictly meant to indicate presence/absence and not as an indication of compliance or nonconformity. Thermal preservation and pH will only be evaluated either at the request of the client or as required by the method/SOP.

		Yes	No	N/A
1	Were **custody seals** on outside of cooler/Box?	☐	☐	☐
	Location of seal(s)? _____ Sealing Lid?	☐	☐	☐
	Were signature and date included?	☐	☐	☐
	Were seals intact?	☐	☐	☐
	Were custody seals on outside of sample container?	☐	☐	☐
	Location of seal(s)? _____ Sealing Lid?	☐	☐	☐
	Were signature and date included?	☐	☐	☐
	Were seals intact?	☐	☐	☐
2	Were **sample containers** properly marked with client sample ID?	☐	☐	☐
3	Did **sample containers** arrive in good condition?	☐	☐	☐
4	Were **chain-of-custody** papers used and filled out?	☐	☐	☐
5	Did **sample container labels** and/or tags agree with custody papers?	☐	☐	☐
6	Was **sample volume** received adequate for analysis?	☐	☐	☐
7	Are samples within specified holding times?	☐	☐	☐
8	Was proper **temperature** (thermal preservation) of cooler at receipt adhered to?	☐	☐	☒
	Cooler Temperature NA °C			
	Blank Temperature NA °C			
9	Is pH (acid) **preservation** necessary, according to method/SOP or Client specified information?	☐	☐	☐
	Is there a client indication that the submitted samples are **pH** (acid) preserved?	☐	☐	☐
	Were VOA vials checked for presence/absence of air bubbles?	☐	☐	☐
	Does the client/method/SOP require that the analyst check the sample pH and if necessary alter it?	☐	☐	☐
10	**Tubes:** Are the tubes capped and intact?	☐	☐	☐
	Do they contain moisture?	☐	☐	☐
11	**Badges:** Are the badges properly capped and intact?	☐	☐	☐
	Are dual bed badges separated and individually capped and intact?	☐	☐	☐

Lab Sample ID	Required pH	pH (as received, if required)	VOA Headspace (Presence/Absence)	Receipt / Preservation Comments
			NA	

Explain any discrepancies: (include lab sample ID numbers): _____

UNCONTROLLED COPY

UNCONTROLLED COPY

Figure 9-2
Internal Chain Of Custody

COLUMBIA ANALYTICAL SERVICES, INC.
Internal Chain of Custody

Page _____ of _____

Laboratory Person Receiving & Accepting Responsibility for Sample(s)
Name: _____ Date: _____ Time: _____

SR#: _____ x _____ Analytical Fraction/Parameter: _____

SAMPLE ID (lab)	SAMPLE ID (lab)	SAMPLE ID (lab)	SAMPLE ID (lab)

DATE	TIME	RELINQUISHED BY	RECEIVED BY	PURPOSE OF CHANGE IN CUSTODY
		Print Name	Print Name	
		Signature	Signature	
		Print Name	Print Name	
		Signature	Signature	
		Print Name	Print Name	
		Signature	Signature	
		Print Name	Print Name	
		Signature	Signature	

Note: Samples are stored in a secure facility and any transfer of custody within the laboratory is considered unbroken.

UNCONTROLLED COPY

UNCONTROLLED COPY

Figure 9-3
Service Request Form

PM Initials: _____

Service Request #: _____

ISR # _____ **TAT:** _____

Report Name: _____ Date Received: _____ Time Rec.: _____

Reporting Address: _____ Purchase Order: _____ Initials: _____

Billing Name: _____ Report To: _____ Bill To: _____

Billing Address: _____ Project Manager: _____ PG #: _____

Project Name: _____ Due Date: _____

Project Number: _____ Client Phone #: _____ Client Fax #: _____

Sample Type

1. SUMMA Canister	4. Silco Canister	7. PUF/XAD-2 Lo	10. Charcoal Tube	13. Filter	16. Air Tank	19. Liquid
2. Tedlar Bag	5. Tenax Trap	8. PUF/XAD-2 Hi	11. DNPH Cartidge	14. Filter Paper	17. Canister 2.4 L	20. Solid
3. Mylar Bag	6. CMS Trap	9. XAD Tube	12. DNPH Solution	15. Silica Gel	18. Badge	21. Other _____

Comments: _____

Tier: _____ Cooler Tmp: _____ °C

EDD (y/n): _____ Temp Blank _____ °C

Chain of Custody Form: (●) Yes ( ) No

Courier: ( ) Yes (●) No

ISR Received: ( ) Yes ( ) No (●) N/A

1	4	7	10
2	5	8	11
3	6	9	12

Sample ID	Lab Code	Test(s) Required	Date Collected	Time Collected	Sample Type	Initial Reading Hg"	Initial Reading psig	Can Pressurization Pi /	Can Pressurization Pf	Can Pressurization Pi 2 / Pf 2	Miscellaneous Can#/ A/P for Liq	Miscellaneous FC # / Volume	TAT DATE	TAT DAY
								/						

Page 1 of 1

UNCONTROLLED COPY

UNCONTROLLED COPY

Figure 9-4
Chain Of Custody Form

UNCONTROLLED COPY

Columbia Analytical Services INC.
An Employee - Owned Company

Air Quality Laboratory
2665 Park Center Drive, Suite D
Simi Valley, California 93065
Phone (805) 526-7161
Fax (805) 526-7270

Page_____ of _____

Chain of Custody Record
Analytical Service Request

Client/Address	Project Name	Analysis	CAS Project No
	Project Number		
Phone / Fax	Sampling Location		Cooler / Blank Temp_____
Email	P.O. #/Billing Information		
Contact / Sampler (Signature)			Comments (e.g., preservative or specific instructions)

Expected Turnaround Time (24 Hr 48Hr, 10Day 40Hr, 30Day Standard) (10 Business Days)

Client Sample ID	Date Collected	Time Collected	Lab Sample No.	Type of Sample	Container ID (Serial #)	Flow Controller (Serial #)	Sample Volume (Liters)						

Relinquished by: (Signature)	Date:	Time:	Received by: (Signature)	Date:	Time:	Additional Comments
Relinquished by: (Signature)	Date:	Time:	Received by: (Signature)	Date:	Time:	
Relinquished by: (Signature)	Date:	Time:	Received by: (Signature)	Date:	Time:	

White Copy: Accompanies Samples

Yellow Copy: Retained by Client

10.0 QUALITY CONTROL OBJECTIVES (PRECISION, ACCURACY, AND MDLS)

A primary focus of the CAS/SIMI Quality Assurance (QA) Program is to ensure the accuracy, precision and comparability of all analytical results. CAS/SIMI has established Quality Control (QC) objectives for precision and accuracy that are used to determine the acceptability of the generated data. The actual types of QC samples required for each analysis is discussed in corresponding analytical standard operating procedures. In addition to proficiency testing programs (where applicable), the laboratory provides verification through internal quality control schemes as detailed in this section.

10.1 Demonstration of Capability

Where required by mandatory test method, regulation, or accreditation protocols, a demonstration of capability (DOC) is performed. This demonstration is made following regulatory, accreditation, or method specified procedures. In general, this demonstration does not test the performance of the method in real world samples, but in the applicable clean matrix, free of target analytes and interferences.

The following steps, if required, are performed to document the demonstration of capability.

1. A quality control sample will be prepared independently from those used in instrument calibration.
2. The analyte(s) is(are) diluted in a volume of clean matrix (for analytes which do not lend themselves to spiking, e.g. air samples, the demonstration of capability may be performed using quality control samples) sufficient to prepare four aliquots at the concentration specified. If not specified, use a concentration approximately 10 times the method stated or laboratory calculated method detection limit.
3. Four aliquots are prepared and analyzed according to the test procedure either concurrently or over a period of days.
4. The mean recovery and standard deviations are calculated for each parameter of interest.
5. Compare the information from #4 to the corresponding acceptance criteria for precision and accuracy in the test method (if applicable) or in laboratory-specified acceptance criteria (if no established mandatory criterion exists). All parameters must be met in order for the demonstration to be considered successful. If any one of the parameters do not meet the acceptance criteria, the performance is unacceptable for that parameter. The DOC must be repeated for all parameters that fail to meet criteria. A repeated failure confirms a general problem with the measurement system. The problem must then be located and corrected at the source and the DOC repeated.

10.2 Accuracy

Accuracy is a measure of the closeness of an individual measurement (or an average of multiple measurements) to the true or expected value. Accuracy is determined by calculating the mean value of results from ongoing analyses of standard reference materials, standard solutions and laboratory

UNCONTROLLED COPY

control samples. Accuracy is expressed as percent recovery (%R) of the measured value, relative to the true or expected value.

If a measurement process produces results whose mean is not the true or expected value, the process is biased. Bias is the systematic error either inherent in a method of analysis (e.g., extraction or desorption efficiencies) or caused by an artifact of the measurement system (e.g., contamination). CAS/SIMI utilizes several quality control measures to eliminate analytical bias, including systematic analysis of method blanks, laboratory control samples and initial calibration verification standards. Because bias can be positive or negative, and because several types of bias can occur simultaneously, only the net, or total, bias can be evaluated in a measurement.

$$\text{Accuracy (\%R)} = \frac{A - B}{C} \times 100 \qquad \text{OR} \qquad \frac{A}{C} \times 100$$

Where A = Analyte total concentration from spiked sample
B = Analyte concentration from non-spiked sample
C = Concentration of spike added

10.3 Precision

Precision is the ability of an analytical method, instrument, and analyst to reproduce a measurement. It is a measure of the variability, or random error, in sampling, sample handling and laboratory analysis.

The American Society of Testing and Materials (ASTM) recognizes two levels of precision: repeatability - the random error associated with measurements made by a single test operator on identical aliquots of test material in a given laboratory, with the same apparatus, under constant operating conditions, and reproducibility - the random error associated with measurements made by different test operators, in different laboratories, using the same method but different equipment to analyze identical samples of test material.

At CAS/SIMI, our "within-batch" precision is measured through the analysis of either duplicate quality control (QC) sample analyses (LCS/LCSD), injections or field samples aliquots (LD) per the method SOP and each is expressed as the relative percent difference (RPD) between the measurements.

$$\text{RPD} = \frac{|D_1 - D_2|}{\overline{D}} x100$$

Where D_1 = Original Result
D_2 = Duplicate Result
$\overline{D}$ = Average

UNCONTROLLED COPY

10.4 Acceptance Limits and Control Charts

The acceptance limits for each method are available based on statistical evaluation of the data generated by the analysis of quality control check samples, unless specific acceptance limits are established by the method or there are not enough points available (non-routine analyses and/or analytes). Control charts are used to record quality control data and compare them with acceptance limits.

The Quality Assurance Program Manager updates control charts on an annual basis following a review of the data. In addition, method conformity is assessed using the calculated values. If trends in the data are perceived, various means of corrective action may then be employed in order to prevent future problems with the analytical system(s). The procedure for generating control charts and implementing limits is detailed in the *Standard Operating Procedure for Control Limits.*

Note: There is no widely accepted procedure for spiking Summa canister and Tedlar bag samples with analytical surrogates, which is not specifically addressed in referenced air methods. Therefore, for the analyses of air samples utilizing surrogates, which are added to the sample stream during preconcentration, these are not considered true surrogates.

10.5 Method Detection Limits / Method Reporting Limits

The Method Detection Limits (MDL) studies for routine analytical methods are determined annually. MDLs are determined in accordance with the *Standard Operating Procedure for the Determination of Method Detection Limits* which is based on the procedure outlined in 40 CFR 136, Appendix B.

The Method Reporting Limits (MRLs) used at CAS/SIMI are the reported lower limits of quantitation, which take into account day-to-day fluctuations in instrument sensitivity as well as other factors. These MRLs are the levels to which CAS/SIMI reports results in order to minimize false positive or false negative results. The MRL is generally two to ten times the method detection limit (MDL), but differs between methods. However, in some cases the MRL is less than two times the calculated MDL. Measures are taken to ensure that the data reported to the client at low levels is both accurate and real including the requirement that the low concentration level of the initial calibration be at or below the MRL.

10.6 Desorption Efficiency and Method Reporting Limits

The desorption efficiency (DE) is the ability of the analytical method to recover the analyte from the collection media. Desorption efficiencies are determined initially and for each analyte to be reported. In addition, a DE study is performed each time there is a change in the test method, or with each new lot of media. Desorption efficiency shall be determined using sorbent media from

UNCONTROLLED COPY

the same lot number used for the field samples, if possible, and of the identical size and type. The DE values are used to correct the sample results (for all samples except passive samplers) before reporting.

Minimum-reporting limits for each reportable analyte are determined initially by the analysis of spiked media, prepared at the desired reporting limit and carried through the entire analytical process. The reporting limit is verified or re-established annually (or if there is a change in methodology or instrumentation) and instrument performance (at the reporting limit) is checked with each analytical batch through the analysis of an analytical standard prepared at the reporting limit.

10.7 Completeness

Completeness is a measure of the amount of valid data that is obtained, compared to the amount that is expected. For purposes of this plan, completeness is calculated by dividing the number of samples having valid data by the total number of samples in the project, expressed as a percentage. The CAS/SIMI objective for completeness is 100%.

10.8 Representativeness

Representativeness is the degree to which a sample aliquot that is analyzed gives results identical to analysis of the whole. CAS/SIMI has sample preparation procedures (where necessary) to ensure that the sample that is to be analyzed is representative of the entire sample. Air samples received by the laboratory in canisters and bags are considered to be homogenous and therefore, no special sample preparation procedures are necessary.

10.9 Comparability

Comparability expresses the confidence with which one data set can be compared to another. To ensure comparability, procedures are in place for the preservation, handling, and analysis of all samples. Data is reported in units specified by the client.

UNCONTROLLED COPY

11.0 QUALITY ASSURANCE AND QUALITY CONTROL POLICIES AND PROCEDURES

The specific types, frequencies, and processes for quality control sample analysis are described in detail in method-specific standard operating procedures. The laboratory uses quality control samples to measure performance, compare performance with standards, and act on any differences. A definition of each type of QC sample utilized by the laboratory is provided in this section. Specific QC sample types and frequencies of analysis have been adopted for each method or specific program requirement; therefore, not all of the samples described herein are applicable to each method. However, a demonstration of a lack of contamination, precision and bias is included in each batch. In addition to QC samples, a number of other quality processes are also described that may impact analytical results.

11.1 Procurement and Approved Vendors

Purchasing of critical items and services is performed in such a way as to ensure that the items and/or services purchased/performed are of the necessary quality to uphold the standard by which the laboratory operates and/or by which analytical methods require. The laboratory evaluates all vendors of critical consumables, supplies and services that may affect the quality of testing. Records of these evaluations and the list of approved suppliers are available to the appropriate personnel. The following are the minimum requirements for approval.

- Consumables and Laboratory Supplies – The evaluation for vendors of consumables and supplies is simply to obtained proof of certification. However, there may be instances, particularly with obscure standards or reagents that finding a certified vendor is not possible. In these cases, the vendor shall be approved if a history is available indicating the minimum quality or through independent testing that shows that the quality conforms to the minimum requirements of the method (the use of applicable QC data is sufficient). Primarily, vendors are ISO certified to an appropriate standard. In addition, items may be purchased from distributors (that are not ISO certified), but that supply materials from ISO certified companies that have previously been approved. However, in some instances, those vendors for which CAS/SIMI has a history and found those vendors to supply materials with the necessary quality are considered acceptable without such an evaluation.

- Services – Critical services within the laboratory are the calibration of equipment such as weights and balances, pressure/vacuum gauges and thermometers. The procedure for evaluating such suppliers of critical services is performed using a checklist, and whenever possible, obtaining certifications of NIST traceability for specific calibrations/certificates supplied to CAS/SIMI by said vendor. In addition, if ISO certification is available, this certificate is also obtained. The requirement for approval for such metrology laboratories is that they must conform to the following requirements:

UNCONTROLLED COPY

- All calibrations must be NIST traceable.
  - Perform calibrations in accordance with the appropriate standards (to be determined during evaluation).
  - Whenever possible, be ISO certified or conform to the requirements of appropriate ISO standards.

All evaluations and approvals are on file and shall be retained for a period of five years or longer if they are still being used by the laboratory for the services for which they were originally approved. All current approved vendors are made available to all the appropriate personnel who order from or use the services of suppliers of critical consumables, supplies or services.

11.2 Subcontract Laboratories

Analytical services are subcontracted when CAS/SIMI needs to balance workload and/or when the laboratory does not perform the requested analyses. Subcontracting is only done with the knowledge and approval of the client and this is accomplished by following the requirements specified in the *Standard Operating Procedure for Project Management and Business Development.*

11.3 Communications (Contracts, Complaints and Confidentiality)

Laboratory communications entail each the following areas:

11.3.1 Contracts – The policy for reviewing contracts and analysis requests ensures that the requirements for testing are adequately defined, documented and understood. In addition, the laboratory shall ensure that it has the capability and resources to meet the client's requirements and that the appropriate test method is selected. The review shall also cover any work that is subcontracted by the laboratory. The client shall be informed of any deviation from the contract. Records of oral discussions with the client are maintained. All amended contracts and requests are distributed to all affected personnel. The actual procedure for performing this review is detailed in the *Standard Operating Procedure for Project Management and Business Development.* Other procedures for evaluating, performing and reporting results for client requests and jobs are also specified in Sections 11.6, 11.7, 11.8, and 11.9.

11.3.2 Complaints – Where a complaint or inquiry, from a client or some other entity raises any doubt as to the laboratory's compliance with CAS/SIMI policies or procedures, or otherwise concerning the quality of calibrations or results, the laboratory shall promptly evaluate the affected area(s). Records of the complaint and subsequent evaluation and any corrective actions and/or audits are thoroughly documented and maintained. Complaints are primarily handled by the Project Manager and Quality Assurance Program Manager according to the policy and procedures for the resolution of complaints outlined in the *Standard Operating Procedure for Dealing with Complaints.*

UNCONTROLLED COPY

11.3.3 Communication – Communication between the laboratory (more specifically the Project Managers) and the client is maintained throughout the duration of a contract and/or request. In addition, whenever there is a request, clients are allowed to monitor testing activities for verification purposes and these visits are handled in such a manner as to not jeopardize other clients' confidentiality. Additional and more specific information regarding this matter is included in the *Standard Operating Procedure for Project Management and Business Development.*

11.3.4 Confidentiality - It is the responsibility of all CAS/SIMI employees to safeguard sensitive company and client information. The nature of our business, the economic well-being of our company and of our clients is dependent upon protecting and maintaining proprietary company/client information. All information, data, and reports (except that in the public domain) collected or assembled on behalf of a client is treated as confidential. No information may be given to third parties without the written consent of the client. As a condition of employment, all employees are required to sign and adhere to confidentiality requirements set forth in the Corporate "Employee Agreement" at date of hire. Additional information on the transmittal of results via fax, phone, mail, or email is included in Section 13.9 of this manual.

11.4 Document and Record Control

This section describes the policy and procedures (or references to) for control of all documents and records that form part and are required to maintain an effective quality system. The procedure, which standard operating procedures, logbooks and quality assurance manuals are uniquely identified, made available and removed from circulation (archived or made obsolete) is detailed in the *Standard Operating Procedure for Document Control.* Examples of documents are, but are not limited to the following: quality assurance manuals, standard operating procedures, forms, result and reporting templates, software and any external source documents such as reference methods and equipment manuals. A record is any documentary material, regardless of physical form or characteristics created or received by the laboratory in connection with conducting business such as procedural evidence, observations and notations. These include but are not limited to logbooks (standards, maintenance and analytical run logbooks), benchsheets, result spreadsheets, log-in records, and sample receipt records, as well as results data and any project management information, training, audits, and final reports. Per laboratory procedure, all records and documents reference the date or dates for which the document and/or record was in force.

Procedures for control and maintenance of both records and documents are described in this manual (Section 11.5) and in the *Standard Operating Procedure for Document Control.* The requirements of document control in the above stated standard operating procedure (SOP) apply to all current and archived logbooks (i.e., standards preparation, instrument maintenance, and analytical sequence), SOPs, and quality assurance manuals. The necessary certifications and approvals administered by external agencies (refer to Attachment E), as well as, all records

UNCONTROLLED COPY

required to document the existence of and compliance with CAS/SIMI policies and procedures including both internal and external audit reports and managerial reviews are maintained.

11.4.1 Document Control Procedure

The procedure for controlling documents and records that are not included in the *Standard Operating Procedure for Document Control* is as follows. Each SOP, manual or document must clearly indicate the effective date of the document. In addition, a master list of all documents (manuals, forms, procedures, etc.) is maintained and includes information (dependent on type of document) such as title, revision and location. Each list is revised in order to ensure that the most recent document is retained and being used.

11.4.2 Record Control Procedure

The control of certain records such as logbooks is included in the *Standard Operating Procedure for Document Control*. However, additional records are all retained in (or the location referenced in) the associated client job file. For example, all information associated with a job shall reference the client name and unique numerical identifier (see Section 9.3). For example, each job file contains at a minimum any project management information, sample receipt records, results spreadsheets, results, final report. Reference to additional information is also included such as the date and the instrument on which the samples were analyzed, the standard(s) identifications, etc. From this information the logbooks or additional QC may be obtained for review. Refer to the note below and Section 13.11 for information regarding the storage, archival, retention, access of all laboratory records.

Note: For specific information on the maintenance of previously reported data refer to Sections 13.7 and 13.8. Refer to Section 13.10 for a list of what records are included in job files.

11.5 Deviation from Standard Operating Procedures

Deviations from current standard operating procedures are handled in accordance with this document. Generally, when a customer requests a modification to a SOP (such as an addition or deletion of target analyte(s), etc.), the Project Manager (PM) handling that project discusses the proposed deviation with the Laboratory Manager and to obtain approval to accept the project. The PM is responsible for documenting the approved deviation from the standard operating procedure and providing a detailed description of the deviation to the laboratory prior to analysis.

For circumstances when a deviation or departure from company policies or procedures involving any non-technical function is found necessary, approval must be obtained from the Laboratory Manager, or other level of authority. Frequent departure from policy is not encouraged. However, if frequent departure from any policy is noted, the Laboratory Manager will address the possible need for a change in policy. The information provided in Section 4.2.4 entitled

UNCONTROLLED COPY

Operational Assessments describes in detail the process of managerial review and the criteria for implementing a change in policy or procedure.

11.6 Method Modifications

CAS/SIMI strives to perform published methods as described in the referenced documents. However, if there is a deviation from the published method, the method is cited as a "Modified" method in the analytical report. If the modification is such that the method becomes "Performance Based," client approval is obtained for the use of the method prior to the performance of the analysis.

11.7 Procedures for Accepting New Work

The specific procedures for accepting new work are dictated in this document as well as in the *Standard Operating Procedure for Project Management and Business Development.* The procedure for accepting new work takes into account the laboratories ability to complete the work in a timely fashion and the ability to actually perform the work. The requests include:

1. Normal and routine analysis utilizing existing laboratory methodologies
2. Non-routine analyte which is specified in a laboratory offered method
3. Analyte for which no method is specified by the client
4. Complete start-up of an established method
5. Analysis requested with no published method

In all cases, the current laboratory analysis backlog (which includes all in-house samples), anticipated samples from accepted jobs, sample holding times, analysts availability, requested turn around time, and number of samples requested are taken into account when making the decision to accept a proposed job. Each scenario is specified and the procedure for determining whether or not to accept the work is described in detail below. In addition, the minimum requirements for performing this work with regards to quality issues such as calibration, training, detection limits, and reporting is included in Section 11.9 of this document.

Normal and Routine Analysis Using Existing Laboratory Methodologies – This includes methods and analytes which are currently offered and routinely analyzed. If it is determined that a proposed job can be completed in a time acceptable to the client without hindering completion of any other job (previously accepted and in-house) then the new work is accepted.

Non-Routine Analyte Which is Specified in a Laboratory-Offered Method – This entails an analyte which is listed in the method but for which we do not currently offer in the analyte list for that method. These types of requests are accepted based on whether or not the proposed job can be completed in a time acceptable to the client without hindering completion of any other job (previously accepted and in-house) and the availability of the standard. In addition, the decision

UNCONTROLLED COPY

is largely made based on the amount of QC requested, as well as the required confidence level of the data.

New Analyte with No Specific Method Requested – The analyte(s) is researched and reviewed by the appropriate personnel for chemical nature, formula, and other related information. The Merck Index and CRC Handbook are reviewed to determine the type of compound, where necessary. After this has been determined, it is assumed, based on the information provided and the matrix that it can be analyzed by an existing method. If not, perhaps a modification of a method or the creation of a method may be attempted. The efficiency of the various approaches is compared and if no method allows for acceptable precision and accuracy then the job is not accepted.

These types of requests are also accepted based on the availability of a standard, sample backlog of the laboratory, the requested QC, and the required confidence level of the data.

Complete Start-up of an Established Method – The method is obtained and reviewed by the Project Manager and/or other appropriate personnel to determine the following:

- If the laboratory believes it is worth the time and expense necessary to proceed; and
- If the instrumentation and reagents required by the method are available.

The issues listed above are in addition to the ones previously stated such as whether or not the job can be completed in a time acceptable to the client without hindering completion of any other job (accepted and in-house), availability of a standard and the current sample backlog of the laboratory.

Analysis Requested with No Published Method – These are usually special requests made by a client and include the analysis of a particular substrate or product. The analyte(s) or analysis is researched and reviewed by the appropriate personnel for chemical nature, formula, and other related information. The Merck Index and CRC Handbook are reviewed if necessary to determine the type of compound, where necessary. After this has been determined, it is assumed that it can be analyzed by an existing method. If not, perhaps a modification of a method or the creation of a method could be attempted, comparing the efficiency of the various approaches. The method, which allows for the best precision and accuracy, shall be used. The analysis is reviewed by the Project Manager and/or other appropriate personnel to determine:

- If the laboratory believes it is worth the time and expense necessary to proceed; and
- If the instrumentation and reagents required by the method are available.

UNCONTROLLED COPY

Instrument Out of Service - The Project Manager assesses the situation for the estimated maintenance time for the instrument against the client's requirements prior to the acceptance of any job. The effect of the downtime on in-house samples is also taken into account when trying to schedule additional analyses.

11.8 Quality Assurance and Control Guidelines for Performing New Work

The purpose of this section is to describe the minimum quality guidelines for performing work (from Section 11.8) with regards to calibration, training, standard operating procedures, method detection limits, standards, and reporting. The expected confidence level of the data, aside from the precision and bias measurements, is especially vital when a primary or second source standard is not available, no standard operating procedure has been written, or no specific training records are available for review. In each of these cases the report will reflect the amount or level of confidence in an analytical result.

Normal and Routine Analysis Using Existing Laboratory Methodologies

The laboratory retains the following information on file for work of this type being performed.

- Standard operating procedure – The SOP may either be a laboratory generated document or in a few cases be the published method with any additions and/or deletions specified in an attachment.
- Training documentation – Initial or continuing demonstration of proficiency.
- Method detection limit – Statistical determination of the minimum concentration of a substance or analyte that can be measured and reported with 99% confidence that the analyte concentration is greater than zero.
- Initial calibration – Calibration standards of varying analyte concentrations (with the low standard concentration at or below the method reporting limit) used to calibrate the response of the measurement system with respect to target analyte concentration.
- Second source standard – The method SOPs include the specific criteria for this standard. A second source standard is prepared from material obtained from a source other than the source of the calibration standards and is analyzed after the measurement system is calibrated, but prior to sample analysis in order to verify the calibration of the measurement system.

Any deviation from this list will result in either declining the proposed job or a special notation made on the final report to the client.

UNCONTROLLED COPY

Non-Routine Analyte Which is Specified in a Laboratory-Offered Method

The quality assurance and control information outlined above may not be fully employed in non-routine analyses (new analyte). If this is the case, results are qualified in the final report. The laboratory analyzes samples based on quantitative, semi-quantitative, or tentatively identified compound(s) reporting confidence levels. Basically, the level of confidence, aside from the precision and accuracy measurements, is established and depends on the existence of a primary standard and initial calibration curve as well as the reporting requirements of the client.

1. Quantitative result with an initial calibration curve, method detection limit study, and whenever possible a second source standard.
2. Quantitative result with an initial calibration curve, method reporting limit indicated as the low standard on the curve, and whenever possible a second source standard.
3. A semi-quantitative result includes (at a minimum) a one-point calibration with the method reporting limit reported as that concentration.
4. Tentatively identified compound(s) are reported as such when the compound of interest is not included in the standard. It is identified when the GC/MS is operated in SCAN mode and the resulting peak is compared to the mass spectra library. An estimated result is determined by assuming a response factor of one (1) for the compound and comparing the height of that compound (TIC) to the nearest internal standard.

Regardless of the confidence level, a standard operating procedure will be in place for the method being offered. However, the SOP specifies only those analytes routinely analyzed and will not be revised to include non-routine analytes. Nevertheless, based on the described procedure for operational assessments, the target analyte list is reviewed on an annual basis.

New Analyte with No Specific Method Specified

Regardless of the confidence level and in all cases where an existing method may be used to analyze the analyte(s), a standard operating procedure will be in place specifying only those analytes routinely analyzed and will not be revised prior to analysis. The laboratory shall analyze the sample using one of the following reporting confidence levels. The confidence level reported shall depend on both the existence of a standard and the required reporting information of the client.

1. Quantitative result with an initial calibration curve, method detection limit study, and whenever possible a second source standard.
2. Quantitative result with an initial calibration curve, method reporting limit reported as the low standard on the curve, and whenever possible a second source standard.

UNCONTROLLED COPY

3. A semi-quantitative result includes at a minimum a one-point calibration with the method reporting limit reported as that concentration.
4. Tentatively identified compound(s) are reported as such when the compound of interest is not included in the standard. It is identified when the GC/MS is operated in SCAN mode and the resulting peak is compared to the mass spectra library. An estimated result is determined by assuming a response factor of one (1) for the compound and comparing the height of that compound (TIC) to the nearest internal standard.

Complete Start-up of an Established Method

CAS/SIMI strives to obtain all of the information listed under established and routine methods. However, depending on the required turn around time, reporting confidence and the end result of the data there may be deviations. Specific deviations with regards to calibration, method reporting limits, as well as training are specified on the final report.

Analysis Requested with No Published Method

The final report includes a summary of the method used to analyze the samples. In addition, the job file will contain sufficient information to reconstruct the analysis if necessary. Also, CAS/SIMI shall strive to obtain all of the information listed under established and routine methods. However, depending on the required turn around time, reporting confidence and the end result of the data there may be deviations. Specific deviations with regards to calibration and method reporting limits are specified on the final report.

11.9 Analytical Batch

The basic unit for analytical quality control is the analytical batch. There are two types of analytical batches defined by CAS/SIMI. These definitions are described in the *Standard Operating Procedure for Sample Batches*. The overriding principle or describing an analytical batch is that all the samples in a batch, both field samples and quality control samples are to be handled and processed in exactly the same manner.

Specific program requirements or method requirements may be exceptions to particular requirements stated in the above mentioned SOP. These exceptions will be addressed in program-specific Quality Assurance Project Plans (QAPPs) or in method Standard Operating Procedures (SOPs).

The following shall apply to all analytical batches and sequences.

UNCONTROLLED COPY

- A method blank (however named) shall be analyzed
- A duplicate sample (laboratory duplicate, laboratory control sample duplicate) shall be analyzed
- Laboratory control sample shall be analyzed, as best defined by the corresponding method SOP

In all instances the following requirements shall be observed:

- All (field) samples in a batch shall be of the same matrix
- A single lot of reagents are used to process the batch of samples
- Field samples are to be prepared and analyzed along with the corresponding QC samples as described in the method specific SOP
- All samples in a batch (field and QC) are to be analyzed on the same instrument. All samples are to be handled and processed in exactly the same way, and all of the data from each analysis is to be manipulated in exactly the same manner.

11.10 Collection Efficiency

In the case of sampling trains consisting of one or more multi-section sorbent tubes, which are received intact by the laboratory, the "front" and "back" sections shall be separated if required by the client. Each section shall be processed and analyzed separately and the analytical results reported accordingly.

11.11 Method Blank

In most cases, the method blank is ultra high purity nitrogen, helium, humidified zero air, or an unused solid sorbent cartridge, impinger solution, or extract solvent, subjected to the entire analytical process. The method blank is analyzed to evaluate the process for contamination. A method blank is included with the analysis of every analytical batch. In the case of industrial hygiene samples, blank sampling media are analyzed, when applicable, by the same procedure as that used for field samples.

Note: A method blank may be otherwise named as in the case of RSK analysis, where water naturally contains both oxygen and carbon dioxide. In this case, the method blank is referred to as a method control sample (MCS). In addition, a TO-15 QC canister may serve as a method blank as long as the requirements of the method SOP are fulfilled.

11.12 Continuing Calibration Blank (CCB)

Continuing calibration blanks (CCBs) are either analyte-free water, solvent that are analyzed in order to verify the zero point of the analytical system when CCV standards are analyzed. The frequency of the CCB analysis is indicated in each method SOP, where applicable. In the case of

UNCONTROLLED COPY

air samples where there may or may not be a sample preparation step required, the CCB and method or reagent blanks may be the same sample and referred to as any one of these.

11.13 Initial Calibration Verification (ICV) Standard

Initial calibration verification standards are standards that are analyzed *after* every initial calibration but prior to sample analysis. This is performed in order to verify the validity of the standards used in the calibration. This standard must be prepared from materials obtained from a source (manufacturer or lot) other than that used for preparing the calibration standards. The frequency and acceptance criteria for the ICV is specified in method specific SOPs.

11.14 Continuing Calibration Verification (CCV) Standard

When a initial instrument calibration is not performed on the day of analysis, the validity of the initial calibration shall be verified prior to sample analyses by a continuing calibration verification (CCV) standard. The details of the CCV procedure, calculations, and acceptance criteria are included in each method SOP.

11.15 Calibration Standard

Calibration standards are vapors or liquids of known concentration obtained from vendor-purchased sources or prepared from in-house stock standard materials. Calibration standards are used to calibrate the instrument response with respect to analyte concentration. Initial calibration standards are analyzed and accepted in accordance with the requirements stated in the corresponding method standard operating procedure.

11.16 Internal Standard

Internal standards consist of known amounts of specific compounds that are added to each standard as well as all field and QC samples (except the method blank) following any preparation or extraction procedure. Internal standards are generally used for GC/MS procedures to correct sample results that have been affected by changes in instrument conditions or changes caused by certain matrix effects. . Internal standards are analyzed and accepted in accordance with the requirements stated in the corresponding method standard operating procedure.

11.17 Surrogate

Surrogates are organic compounds which are similar in chemical composition and chromatographic behavior to the analytes of interest, but which are not normally found in environmental samples. The percent recovery is calculated for each surrogate and the recovery is considered a measurement of the overall method performance.

UNCONTROLLED COPY

The following are specific requirements for surrogates depending on the sample matrix of interest.

- Air Samples – Surrogates shall be used as specified in each method SOP.
- Aqueous, Soil, etc. Samples – Surrogate compounds must be added to all samples, standards, and blanks prior to extraction and analysis, for all organic chromatography methods except when the matrix precludes its use or when a surrogate is not available. Surrogates are spiked and analyzed and accepted in accordance with the requirements stated in the corresponding method standard operating procedure.

11.18 Matrix Spikes

Matrix spiked (MS) samples are aliquots of samples to which a known amount of the target analyte (or analytes) has been added. The samples are prepared and analyzed in the same analytical batch and in exactly the same manner, as are routine samples. The stock solutions used for spiking the sample(s) are prepared independently of calibration standards. The spike recovery measures the effects of interferences caused by the sample matrix and reflects the accuracy of the method for the particular matrix in question.

The following are specific requirements for the analysis of the matrix spikes depending on the matrix of interest.

- Air Samples – Matrix spiked samples are often <u>not feasible</u> for air matrices. Therefore, the MS shall be used as required by the test method and as specified by the corresponding SOP.
- Aqueous, Soil, etc. Samples – If the mandated or requested test method does not specify the spiking components, the laboratory shall spike all reportable components. However, a representative number (at a minimum 10%) of the listed components may be used to control the test method if the components interfere with an accurate assessment (such as simultaneously spiking chlordane, toxaphene and PCBs), the test method has an extremely long list of components, the components coelute or the components are incompatible. The selected components of each spiking mix shall represent all chemistries, elution patterns and masses, permit specified analytes and other client requested components. However, the laboratory shall ensure that all reported components are used in the spike mixture within a two-year time period, unless the spiking list is specified by the referenced method.

For industrial hygiene samples, a laboratory control sample (LCS) and laboratory control sample duplicate (LCSD) are typically analyzed in lieu of MS/MSD, due to the lack of replicate samples submitted. This is the case in a number of other methods and is discussed in each method standard operating procedure.

11.19 Duplicate Field Sample and Duplicate Matrix Spike

These are replicate field samples that are subjected to the same preparation and analytical process as the original sample. Depending on the method of analysis and the number of replicates submitted

UNCONTROLLED COPY

by the client, either a duplicate sample or a matrix spiked sample and duplicate matrix spiked sample (MS/MSD) may be analyzed.

Duplicate field samples are generally reported as separate samples. The acceptance criteria for the relative percent difference between duplicate analyses or between a MS and DMS is included in each corresponding method SOP.

11.20 Laboratory Duplicate (LD)

The laboratory duplicate is defined as an aliquot of a sample taken from the same container under laboratory conditions and processed and analyzed independently. The analysis of laboratory duplicates give a measure of the precision associated with laboratory procedures, but not with sample collection, preservation, or storage procedures. Specific requirements with respect to frequency and acceptance are included in method SOPs.

11.21 Laboratory Control Sample (LCS)

The laboratory control sample is usually an aliquot of ultra high purity nitrogen, helium or humidified zero air, unused extract solvent, blank sorbent cartridge, etc. to which known amounts of the method analyte(s) is(are) added. The LCS sample is prepared and analyzed in the same analytical batch, and in exactly the same manner, as field samples. Spiking standards are purchased or prepared independently of calibration standards. The percent recovery (%R) of the target analytes in the LCS assists in determining whether the methodology is in control and whether the laboratory is capable of making accurate measurements at the required reporting limit.

For industrial hygiene samples, desorption efficiency studies are performed for each batch of samples received for a given analytical method. Spiking standards are prepared at known concentrations, and blank sorbent media (same lot as the sampling media if possible) are spiked at a minimum of two concentration levels.

The following are requirements for the analysis of the LCS depending on the matrix of interest. Specific information on the frequency and acceptance criteria of the LCS analysis is included in each method SOP.

- Air Samples – A LCS shall be analyzed at a rate of at least one per batch of twenty or fewer samples, per sample preparation method for each analyte. If a spiking solution is not available, a calibration solution whose concentration approximates that of the samples shall be included in each batch and with each lot of media.
- Aqueous, Soil, etc. Samples – A LCS shall be analyzed at a frequency of one out of every twenty samples per matrix type prepared over time. The results of these samples shall be used to assess the batch.

UNCONTROLLED COPY

11.22 Field and Trip Blank

Field and trip blanks are analyzed when they are submitted to the laboratory for analysis. The actual field samples are flagged (when analytes are found in the blank) if and only if the laboratory is able to analyze the samples in the same analytical sequence as the corresponding field or trip blank. If this is not possible due to client submission restrictions then the results for the samples and blanks shall be reported independently with no flag. However, an explanation of this is included in the final report. This laboratory does not feel that Summa canisters are suitable for use as field blanks. It is for this reason that the results for these types of containers are reported as separate samples and flagging is not considered appropriate.

11.23 Source and Preparation of Standard Reference Materials

All analytical measurements are performed using materials and/or processes that are traceable to a Standard Reference Material (SRM). Metrology equipment (analytical balances, thermometers, etc.) is calibrated using SRMs traceable to the National Institute of Standards and Technology (NIST). These primary SRMs are themselves recertified on an annual basis.

Consumable primary stock standards are obtained from certified commercial sources. All standard reference materials (SRMs) that are received at CAS/SIMI are recorded by the technical staff in the appropriate notebook(s) according to the *Standard Operating Procedure for Making Entries into Logbooks and onto Benchsheets* and are stored under conditions that provide maximum protection against deterioration and contamination. In addition, information is included on the sample label in accordance with the *SOP for Receipt, Preparation, and Tracking of Standards, Reagents, and Media.*

Stock solutions and/or calibration standard solutions are prepared fresh as often as necessary according to their stability. After preparation, all standard solutions are properly labeled as to analyte concentration, date, analyst, and expiration date. Generally, expiration dates are assigned per the guidance information provided in the *Standard Operating Procedure for Receipt, Preparation, and Tracking of Standards, Reagents, and Media.*

11.24 Glassware Cleaning

The use of glassware at this facility is at a minimum; however, all glassware that is to be used undergoes a rigorous cleansing procedure following every usage. Glassware cleaning at the main laboratory and remote sample preparation laboratory are performed in accordance with the *Standard Operating Procedure for Cleaning Glassware.*

UNCONTROLLED COPY

12.0 CALIBRATION PROCEDURES AND FREQUENCY

All equipment and instruments used at CAS/SIMI are operated, maintained and calibrated according to the manufacturer's guidelines and recommendations, as well as to criteria set forth in the applicable analytical methodology. Where applicable, these techniques are only performed by personnel who have been properly trained in the procedures. Documentation of calibration information is maintained in the appropriate reference files.

Any item of equipment which has been subjected to overloading or mishandling, or has been shown by verification or otherwise to be defective; is taken out of service until it has been repaired. The equipment is placed back in service only after verifying by calibration that the equipment performs satisfactorily and is labeled or marked to indicate calibration status. Brief descriptions of the calibration procedures for the major laboratory equipment and instruments are described below. Refer to Section 11.1 for information on approved service suppliers for the calibration of laboratory equipment.

Gas-tight syringes are Class A glassware and calibration is not necessary; however, documentation attesting to the established manufacturer accuracy is on file in the laboratory.

12.1 Temperature Control Devices

Temperatures are monitored and recorded for all temperature-regulating devices including freezers and refrigerators. Bound record books are kept which contain identification of equipment (unique identifying number), location of devices, daily-recorded temperatures, acceptance criteria and the initials of the laboratory staff member who performed the checks for all temperature-regulating devices in daily use.

All thermometers have been given a unique identifying number, and the calibration of these thermometers is checked annually against a National Institute of Standards and Technology (NIST) certified thermometer. All corresponding correction factors are noted on the device as well as in the thermometer calibration logbook. The NIST thermometer is recertified by an approved professional metrology organization on an annual basis and the certificate is retained on file for review. All temperature monitoring and thermometer calibration requirements are performed in accordance with the *Standard Operating Procedure for Laboratory Sample Storage, Analysis and Tracking.*

12.2 Analytical Balances

Analytical balances and weights are calibrated and certificates issued annually by a professional metrology organization. The calibration of each balance is checked once each day of use by utilizing the calibrated weights and by following the additional requirements and procedures detailed in *Standard Operating Procedure for Calibration and Use of Analytical Balances.*

UNCONTROLLED COPY

Bound record books are kept which contain the identification of equipment (serial number), location of equipment, recorded measurements and the initials of the analyst who performed the check. All certificates for the balances and weights are available for review.

12.3 Digital Pressure/Vacuum Gauges

CAS/SIMI digital pressure/vacuum gauges are used in a number of critical measurements within the laboratory. The following is a list of the uses for this gauge type.

- Canister cleaning and conditioning
- Measure the vacuum on canisters before they are sent to the client for sampling.
- Measure the initial/final vacuum/pressure of canisters prior to analysis.
- Measure pressure during the preparation of selected standards.

Digital pressure/vacuum gauges are calibrated and certificates issued once per year by a professional ISO accredited metrology organization following ISO/IEC 17025-1999. All calibrations are performed against standards traceable to the National Institute of Standard and Technology (NIST) or other recognized national metrology institutes. In addition, CAS/SIMI performs a calibration check for each gauge six months following the calibration date. This procedure is performed by evaluating the gauge(s) in question against another more recently calibrated gauge at a minimum of two readings (i.e., complete vacuum, around ambient or with a slight positive pressure). If there is a difference of greater than 2% the gauge is checked against another gauge. If the initial readings are confirmed, the gauge is sent for re-calibration by an outside vendor. The laboratory retains all corresponding calibration information. This procedure is detailed in the *Standard Operating Procedure for Evaluation of Pressure/Vacuum Gauges.*

12.4 Automatic Measuring Devices

The calibration of pipettors used to make critical-volume measurements is verified twice per year following the *Standard Operating Procedure for Evaluating the Calibration of Repeating Pipettors*. Typically, the indicated volume or range (where applicable) of the pipette is checked and both the accuracy and precision verification are performed using the above-mentioned procedure. The calibrations are evaluated against the intended use (volume or range) of the pipette and if the calibration is not approved for the specified volume(s) it is tagged accordingly (i.e., a pipette with a specified range of 1uL to 25uL is not good at 1uL, a check will also be performed at 5uL and if it passes it will be tagged with "Do Not Use Below 5uL"). The results for all calibration verifications are recorded and maintained.

12.5 Gas Chromatography/Mass Spectroscopy Systems

Method-specific instrument tuning is regularly checked using bromofluorobenzene (BFB) for volatile organic chemical (VOC) analysis, or decafluorotriphenylphosphine (DFTPP) for semi-

UNCONTROLLED COPY

volatile analysis. Mass spectral peaks for the tuning compounds must conform both in mass numbers and in relative intensity criteria before analysis of samples or standards can proceed.

GC/MS instruments are calibrated at a minimum of five different concentration levels for the analytes of interest, using procedures outlined in method SOPs and/or appropriate method citations. A second source standard (manufacturer or vendor) is used as the initial calibration verification and is analyzed following the calibration. Continuing calibration verification (CCV) is performed daily and at intervals specified in the corresponding method SOP.

If required, compounds selected as system performance check compounds (SPCCs) must show a method-specified response factor in order for the calibration to be considered valid. Calibration check compounds (CCCs) must also meet method specifications for percent difference from the multipoint calibration.

12.6 Gas Chromatography and High Performance Liquid Chromatography

GC and HPLC instruments are calibrated at a minimum of five different concentration levels (unless the method otherwise specifies) for the analytes of interest, using procedures outlined in method SOPs and/or appropriate method citations. A second source standard (manufacturer or vendor) is used as an initial calibration verification and is analyzed following the calibration. Continuing calibration verification (CCV) is performed daily and at intervals specified in the corresponding method SOP.

UNCONTROLLED COPY

13.0 DATA REDUCTION, VALIDATION, AND REPORTING

CAS/SIMI reports the analytical data produced in its laboratory to the client via the certified analytical report. This report includes a case narrative, client project information, specific test results, quality control data, chain of custody information (where available), and any other project-specific support documentation including sample receiving information. The following procedures describe an overview of the data reduction, validation and reporting procedures. Specific procedures may be found in the *Standard Operating Procedure for Data Review* and the *Standard Operating Procedure for Ensuring Data Integrity* as well as method-specific standard operating procedures.

13.1 Analyte Confirmation

Confirmation is performed as specified in method and/or corresponding SOPs. However, identification criteria for GC/MS methods as well as multi-component analytes are summarized below:

- GC/MS Methods – Confirmation is not necessary for MS analyses. However, mass spectral confirmation must meet the criteria stated in the applicable method and the analyte in the sample must, in the opinion of a qualified analyst, correspond to the spectrum of the analyte in the standard or the current GC/MS reference library.
- Multi-Component Analytes – Confirmation is not necessary for analytes such as gasoline, diesel, and other petroleum hydrocarbon products.

13.2 Retention Time Windows

Retention time windows are calculated, where appropriate, in accordance with method standard operating procedures. In most cases the windows are generated from either the initial calibration or a standard analyzed over a 72-hour period. In either case, the procedure used is detailed in corresponding method SOPs.

13.3 Data Review and Reporting

All data is initially reviewed and processed by the analyst who performs the analysis using appropriate methods (e.g. chromatographic software, instrument printouts, hand calculation, etc.). The analyst performs a check of all the data for accuracy and acceptability. Upon completion of the initial review, all pertinent data is forwarded to another analyst for a peer review. The secondary analyst evaluates the data against the appropriate Data Review Checklist. The reviewer initials and dates the checklist when the review is complete.

UNCONTROLLED COPY

The Systems Analyst transfers the client and sample information to the appropriate report format. Once the complete data set has been transferred into the proper electronic report form(s), it is then printed. The Data Validation Coordinator (DVC) reviews the resulting hardcopy version of the report. This review includes but is not limited to a check of all GC/MS calculations, a verification of GC data against the analysis spreadsheet, check for data entry errors, and a review of quality control results associated with the sample. Any analytical or typographical errors associated with the report will be flagged and the report with the associated data will be returned to the Systems Analyst for review and correction. Once the DVC has checked the data for accuracy and acceptability, the Laboratory Manager or Director of Research and Development conducts a general technical review taking into account the sample matrix, sample source, project specific data quality objectives, and where appropriate a result correlation check between analyses. When the data has been found to be acceptable, preliminary results may be faxed to the client via fax or email. Refer to Section 13.9 for the transmission of test result reports. The data review procedure is conducted in accordance method SOPs, this document and the *Standard Operating Procedure for Data Review.*

Once all data has been reviewed, approved and results sent to the client, the DVC will take the hardcopy reports in addition to the form(s) produced by the analyst and raw data and compile the correct tier level sample report. For information on the data package requirements refer to Table 13-1. The case narrative includes information regarding the test method(s) performed, any necessary sample information, and any specific or unusual findings or occurrences. When the case narrative and package has been found to be acceptable, two laboratory personnel sign the report letter (usually the analyst and one upper management employee). A copy of the sample data package is made and retained at the laboratory for a period of five years (unless otherwise specified by the client) while the original is mailed to the client.

To the extent possible, samples shall be reported only if all quality control measures are acceptable. If a quality control measure is found to be out of control, and the data is to be reported, all samples associated with the failed quality control measure shall be reported with the appropriate data qualifier(s).

13.4 Quality Control Data Validation

The integrity of the data generated in the laboratory is assessed through the use of a variety of measures that may include reagent blanks, laboratory control samples, duplicates, and matrix spikes. Specific calculations and numerical criteria for evaluation of these QC samples are listed within each method-specific SOP. Other validation measures of the data include a check of the calibration curve, an accuracy check of the QC standards and a check of the system sensitivity.

UNCONTROLLED COPY

13.5 Data Qualifiers

Whenever necessary, data qualifiers are included on the final report as a means to describe out of control situations, estimated concentrations, interferences, and other pertinent information. The table included in Appendix D of this document is a list of qualifier flags available for use at CAS/SIMI. If there is not a specific flag included, the final report shall contain a sufficient explanation of the data provided to the client. Also, additional qualifiers may be added to the list as needed and clients may request that specific qualifiers be used in place of those indicated in this document.

13.6 Laboratory Report Format and Contents

The final report should be a stand-alone document in that all of the information relating to sample receipt and analysis. Prior to reporting and following analyses, the client shall be contacted in writing (email is sufficient) of any event such as the identification of defective measuring or test equipment as well as loss of sample, etc. that casts doubt on the validity or completeness of results. All information of this type is included in the final report. The following describes each section of the CAS/SIMI final report and the information that should be consistently provided to the client for proper interpretation of the results.

13.6.1 Case Narrative

The cover page (Case Narrative) must include at a minimum the following information where applicable or available regardless of analysis requested and sample type. See Section 13.6.3 for additional requirements.

- Title
- Client Name
- Address
- Client Contact
- CAS/SIMI Contact (from signatures)
- Client Project Identification (if applicable)
- Date of Report
- Date of Revision (if applicable)
- Date of Addendum (if applicable)
- Date of Receipt
- CAS/SIMI Project Number (report number)
- CAS/SIMI Revision Number (if applicable)
- CAS/SIMI Addendum Number (if applicable)
- Purchase Order (if applicable)
- Total number of pages (Page 1 of #)

UNCONTROLLED COPY

The first portion of the case narrative should be devoted specifically to sample receipt and any deviations from the *Standard Operating Procedure for Sample Receipt, Acceptance and Log-In*. This information must include sample identifications and reference to or details specified on the Sample Acceptance Check Form such as canisters received with questionable pressure/vacuum, bags received flat or out of hold time, as well as VOA vials with headspace or lack/presence of preservation (cooler temperature and pH readings). These details should be included regardless of the believed effect these conditions may have had on the submitted samples. As previously mentioned this information is important and must be included to provide the client with an exceptionally detailed description of the condition of the samples upon receipt.

Any discussion with the client to proceed with the analysis regardless of sample receipt condition must be detailed in the case narrative. This may be accomplished by adding "Per the client's request,". On occasion, the client may not be contacted for samples received or analyzed out of hold time due to a reoccurring situation. This is considered appropriate as long as the lab has the proper statement/instructions from the client regarding this matter on file.

If CAS/SIMI performs sample collection a description of the sampling procedure is typically detailed in the case narrative (i.e. industrial hygiene samples).

13.6.1.1 Sample identification

The sample identification(s) must include a description and unambiguous identification of the tested sample including the client identification code. All client submitted samples must be identified in the final report. The following is an example of a proper sample identification section.

Three (3) air samples were submitted in Summa canisters and identified by the client as:

(1) - Sample X
(2) - Sample Y
(3) - Sample Z

Note: If a party other than the client submitted the samples, this must also be noted. However, a copy of the client's chain of custody is included in the report, which identifies the sample relinquishing party.

13.6.1.2 Analyses Descriptions

The referenced test method(s), if available, along with a description of the procedure is included in the report. Any deviations from (such as failed quality

UNCONTROLLED COPY

control), additions to or exclusions from the test method (such as environmental conditions, injection technique, preparation technique, etc.), and any non-standard conditions that may have affected the quality of the results is added to the final report. In addition, any non-routine analyte reported must be reported according to the procedure detailed in Section 11.9 of this document.

Also, any test data provided by outside sources including subcontracted laboratories, clients, etc. must be detailed within each analysis description and include subcontractor name.

13.6.1.3 Signatures

A signature and title, or an equivalent electronic identification of the persons accepting responsibility for the content of the report (however produced). Usually, this pertains to the analyst that performed the analysis or majority of analyses and a supervisor or the Laboratory Manager.

13.6.1.4 Statements

Each of the following statements, however worded is included on the cover page.

- The results included in this report relate only to the sample(s) submitted and identified herein, and in the documented condition received by the laboratory.
- All results are intended to be considered in their entirety, and CAS is not responsible for utilization of less than the complete report.

13.6.2 Result Pages

The identification and definition of applicable data qualifiers, reporting units, and when required, a statement of the estimated uncertainty of the test result must be included in one or both the case narrative and the result page. Also, there must be a clear identification of numerical results with values outside of quantitation limits. Each result page must have the following information.

- CAS/SIMI Project Number (original, revision or addendum)
- Client
- Client Sample Identification
- CAS/SIMI Sample Identification (Duplicates should be identified with a "DUP")
- Test Method
- Instrument
- Analyst(s)
- Matrix

UNCONTROLLED COPY

- Date/Time of Collection[1] (For hold times greater than 24 hours, the time of collection may be referenced on chain of custody)
- Date Received
- Date/Time of Preparation[1] (where available)
- Date/Time of Analysis[1]
- Volume(s) Analyzed

[1]The times of sample collection, sample preparation and/or analysis is included if the required holding time for either activity is less than or equal to 24 hours (dates are always included).

13.6.3 Hold Time Evaluations

1. If no sampling time is provided, hold times are considered valid until the end of the day.
2. Time zones are not taken into consideration unless requested by the client.
3. Dates and times of collection must be taken into account when provided.
4. The start of sample preparation (e.g., addition of solvent), where applicable, is considered the end of the hold time.

13.7 Report Revision

After issuance of a hard copy formal report (submitted to the client), the original laboratory report shall remain unchanged. However, a revised report or revised pages (not applicable to the case narrative) may be issued and regardless of the circumstances of the revision, the procedures described below shall be consistently followed. The issuance of either a revised report or revised pages is at the discretion of the laboratory.

13.7.1 Revised Report

1. The revised report shall be identified with an "R" following the original CAS/SIMI Project Number on every generated page. Previously revised reports shall be identified with an "R2".
2. The cover page of the report also includes a reference to the original report number.
3. The date of revision shall be included.
4. A revision letter shall accompany the revised report and shall include:

    - CAS/SIMI report file number being revised
    - Identification of revision including all affected samples
    - Statement detailing that the enclosed is a revised report as indicated by the "R" identifier.

UNCONTROLLED COPY

- Statement that the revision letter should be kept on file
- Statement that the original report is no longer valid and it must be destroyed or returned to the laboratory.
- CAS/SIMI contact and phone number

13.7.2 Revised Page(s)

1. The revised page(s) shall be identified with and "R" following the original CAS/SIMI page number. Previously revised pages shall be identified with an "R2".
2. A revision letter shall accompany the revised pages and shall include:

    - Date of revision
    - CAS/SIMI report file number being revised
    - Page numbers that were revised
    - Identification of revisions
    - Statement detailing that the enclosed are revised pages as indicated by the "R" identifier.
    - Statement to the effect that the revised pages must be inserted into the original report.
    - Statement that the original report page(s) is no longer valid and it must be destroyed or returned to the laboratory.
    - Statement that the revision letter should be kept on file
    - CAS/SIMI contact and phone number

13.8 Report Addendum

An addendum may be issued if there is an omission of data information from the original report such as quality control data or analytical results. The original report once issued shall remain unchanged. Therefore, the addendum shall be identified as a separate document and must reference the original report (an "A" following the corresponding CAS/SIMI project number). This identification must be present on every generated page. Additionally, addendum pages may be added. The addendum pages shall be identified with an "A", "B" and "C", and so on following the original page number after which the page(s) is/are to be inserted.

An addendum letter shall accompany the addendum report or pages and include:

- CAS/SIMI report file number
- Identification of addendum including all affected samples
- Statement detailing that the enclosed is an addendum report or pages and how they are identified.
- Statement that the letter should be kept on file
- CAS/SIMI contact and phone number

UNCONTROLLED COPY

13.9 Transmission of Test Results and Reports

Transmission of test results by telephone, facsimile, telex, or other electronic or electromagnetic means must follow the procedures detailed in this document to ensure that the client's confidentiality is preserved as best as possible. Refer to the *SOP for Data Integrity* for additional information on the transmission of results.

Telephone – The laboratory may not give results or discuss any results to any persons other than the client. However, the client may request, in writing to have results released to another individual or company. This request must be specific with regards to information, to whom the information is to be released and must be on the Client's letterhead or email.
Facsimile – Results may be faxed (as confidential) to the number supplied to the laboratory by the client. If the results are to be released to another individual or company the same procedure as specified above must be followed. Results may only be faxed following review by the laboratory and Data Validation.
Electronic – Results may be sent electronically (as confidential) to the address supplied by the client. However, results requested by other parties may not be sent without prior written consent of the client. Results may only be transmitted following review by the laboratory and Data Validation.

A copy of the report may not be released or the results discussed with another party without the prior written consent of the client, no verbal requests will be accepted. Another party may not request the release of report/results. The laboratory must convey the fact that all reports generated are confidential and results may only be released at the request of the client and they must be in writing on the Client's letterhead to be considered acceptable and in compliance with laboratory policy. A client may request to have results released on an on-going basis by the submittal of a single consent letter stating the details of the release.

13.10 Documentation

CAS/SIMI maintains a records system which ensures that all laboratory records of analysis are retained and available. A service request number (project number) is electronically assigned to each project for reporting and filing purposes. Analysis data shall be maintained for a period of five years (from date of report issuance) unless the client has made other arrangements.

13.10.1 Documentation of Analysis Data

The analysis documentation system includes, but is not limited to, the following items (where appropriate) for each set of analyses performed:

- Instrument parameters; and
- Sample analysis sequence; and
- Analysis benchsheets, instrument printouts, results spreadsheets; and

UNCONTROLLED COPY

- Chromatograms and peak integration reports for all samples, standards, blanks, duplicates and reruns; and
- Initial calibration and data review checklist(s); and
- Copies of report sheets submitted to the work request file; and
- Applicable standard identification numbers; and
- Chain of custody, service request and sample acceptance check forms; and
- Nonconformity and Corrective Action Report (NCAR) form.

13.10.2 Reporting Deliverables

In order to meet individual project needs, CAS/SIMI provides several levels of analytical reports. Basic specifications for each level of deliverable are described in Table 13-1. Variations may be provided based on client or project specifications.

13.10.3 Electronic Data Deliverables

When requested, CAS/SIMI provides Electronic Data Deliverables (EDDs) (as confidential) in the format specified by the CAS, client, project or specific EDD specifications, where appropriate. The EDD is prepared by either the analyst or Systems Analyst using the electronic version of the laboratory report to minimize transcription errors. In addition, any data not previously reviewed is reviewed and compared to the hardcopy report for accuracy.

13.11 Records Maintenance (Storage, Archival, Access, and Retention)

This section describes both specific and general procedures for the storage, archival, access and retention of all records associated with the laboratory quality system and other documents required under laboratory accreditation programs. Records are maintained, stored and archived in a logical retrievable manner. This system includes (but is dependent upon the type of record) type, date, job number or other unique identifying manner. For example, training records are stored by person, type of training and date; whereas audits consist of type of audit (internal or external), auditing body (where applicable), year and unique audit identification. Both complaints and nonconformities are maintained and archived separately and by a unique identification number, which includes the date of occurrence and a sequential number for that date. All training, audits and reviews, accreditation information, certificates, complaints, nonconformities, method detection limit studies, and other support records are maintained on file in the Quality Assurance department, where access is controlled by the Quality Assurance Program Manager. Other records, excluding electronic records (described later in this section), are maintained in a manner whereby access is limited to laboratory personnel.

All records, both hardcopy and electronic, are held by the laboratory for a minimum of five years or as specified by the client after the date of analysis. However, the laboratory shall retain records of

UNCONTROLLED COPY

analyses for ten years if the client specifically identifies the job as being performed because of epidemiological or public health concerns. Jobs/projects requiring an archival of greater than five years (per the client's written request) are pulled and properly stored for the appropriate duration. All records that have met the minimum retention duration are destroyed or erased, whichever is applicable. This is executed in such a manner as to conserve all applicable requirements of confidentiality.

Any revisions or changes to original data must be retained in the same file and appropriately marked with the reason and where appropriate initials and date of the person responsible. Records are kept in a secure location where they can be retrieved when necessary. Access to all hardcopy files is documented with an access card that includes the initials of the person retrieving the file, date out and date in as well as the initials upon return of the file. Persons requesting access to electronic data is detailed with the use of a logbook and is maintained by the person responsible for Information Technology. Electronic data files which have been revised are given a unique file number or directory and both files are retained as detailed in this section. Additionally, all revised hardcopy records are maintained (case filed) in the appropriate job file.

All electronic records are saved using a tape backup system administered by the local information technology supervisor, with adequate redundancy to allow for possible media failure (See *Standard Operating Procedure for Tape Backup and Tape Archiving*). The laboratory maintains computer systems that allow archived records and the access to such records to be controlled for the duration of the retention period.

Service request files (client job files) are filed by service request number (job number) and maintained in file cabinets for approximately two years. The files are then placed in uniquely identified file boxes. The boxes are identified by the year in which the job was completed as well as a sequential number for each box (for that year). A master logbook is maintained which identifies the box number and the numerical contents of the box. A notation is made in the log once a box is moved to the remote sample preparation laboratory for continuing storage and when the files in the file box are destroyed (by shredding). Prior to destroying any year of files, client/project archival requests are reviewed and those client jobs in which the required archival duration exceeds five years are filed, appropriately labeled and stored.

In the event that the laboratory transfers ownership or goes out of business, laboratory records shall be maintained for a minimum of five years or for the contracted period (if exceeds five years) or transferred according to the clients' instructions. In addition, in cases of bankruptcy, appropriate regulatory and state legal requirements concerning laboratory records shall be followed.

UNCONTROLLED COPY

Table 13-1

Descriptions of CAS/SIMI Data Deliverables

Tier I **A Routine Test Report Includes the Following**

1. Case Narrative
2. Sample Analytical Results
3. Method Blank Results
4. Laboratory Duplicate Results (if client's sample is analyzed)
5. Chain of Custody Documents
6. Sample Acceptance Check Form

Tier II **In Addition to the Tier I Deliverables, this Report Includes the Following:**

1. LCS or LCS/LCSD Summary Form
2. Surrogate Recovery Summary Form

Tier III **Data Validation Package. In addition to the Tier I and II Deliverables, this Test Report includes items 1-9 listed below (the client may also request any of the items 10-14, where applicable):**

1. Quantitation Reports
2. Chromatograms
3. ICV Summary Form
4. Initial/Continuing Calibrations
5. BFB/DFTPP Tuning Data
6. Spectra - Target Compounds
7. Spectra – TICS
8. Run Logs
9. Sample Acceptance Check Form
10. IS Area Summary Form
11. Duplicate Summary Form
12. MB Summary Form
13. Example Calculations
14. Standard Logs

Electronic Data Deliverables EDDs are available upon request and conform to CAS, Client and/or specific EDD formats and specifications.

UNCONTROLLED COPY

14.0 LABORATORY AUDITS, REVIEWS AND ACCREDITATIONS

Audits are an essential part of the QA program. There are two types of audits used at the facility: System Audits are conducted to qualitatively evaluate the operational details of the QA program. The Performance Audit is a review conducted to evaluate the analytical activities of an analyst, as well as the data produced by that analyst. Management reviews are conducted by individuals with executive responsibility to review the laboratory's quality system in order to ensure continuing suitability and effectiveness, and to introduce any necessary changes or improvements. These changes may include the addition and/or deletion of offered test methods and analytes. In addition, results from such laboratory audits (whether conducted internally or by an external entity) and managerial reviews, regardless of the severity, are shared with the appropriate laboratory personnel.

All audits are conducted to verify compliance with applicable laboratory standard operating procedures and policies, AIHA policies, ISO/IEC 17025, and NELAC standards. In addition, it may be necessary to audit methods or systems in accordance with client specified requirements. If any findings from an audit or review cast doubt on the correctness or validity of the laboratory's calibrations or test results, the laboratory will take immediate corrective action and shall notify, in writing, any client whose work was involved. Whenever testing discrepancies are detected, or departures from documented policies and procedures occur (as detected by client feedback, nonconformity reports or audits), the Quality Assurance Program Manager reviews all pertinent information/documentation to determine and/or implement the proper corrective action (i.e., training, procedural changes, etc.).

14.1 Audits

14.1.1 System Audit

The system audit examines the presence and appropriateness of laboratory systems. External system audits of CAS/SIMI are conducted by various regulatory agencies and clients. Table 14-1 summarizes the major programs in which CAS/SIMI participates. The internal system audits are scheduled and performed by the Quality Assurance Program Manager. These audits are conducted a minimum of four times per year with an additional comprehensive lab-wide system audit.

The results of each audit are reported and retained on file. All audit findings and corrective actions are documented and retained by the QAPM and the Laboratory Manager is informed for review and comment. Any deficiencies noted by the auditor are summarized in an audit report. Should problems impacting data quality be found during an internal audit, any client whose data is adversely impacted will be given written notification if not already provided. Additional details of the internal audit program can be found in the *Standard Operating Procedure for Conducting Internal Laboratory Audits.*

UNCONTROLLED COPY

14.1.2 Performance Audit

There are a number of separate reviews that can be considered part of the overall performance audit including a review of the analytical reports and generated data (hardcopy and electronic), logbook reviews and on-site analyst work reviews.

14.1.3 Performance Evaluation Program

CAS/SIMI participates in the analysis of performance evaluation (PE) samples. Each test method and analyte included in the performance are monitored using NIST approved vendors for proficiency testing on a semi-annual basis. CAS/SIMI participates in PE studies that are required by programs listed in Table 14-1. However, there are no PE samples currently available for air matrices.

Additionally, as a way to further monitor the quality of the laboratory's analytical activities, the laboratory may perform replicate analysis using the same method or where possible retest any retained samples.

PE samples are processed in the same manner as field samples. At a minimum, the Laboratory Manager and QA Program Manager each review the results. The QA Program Manager reports the results to the appropriate agency or study coordinator. For any results outside acceptance criteria, the analysis data is reviewed to identify a possible cause for the deficiency, and corrective action is taken and documented.

14.1.4 Electronic Data Audit

Electronic data audits are conducted on a quarterly basis. A minimum of three electroninc audits (initial calibration, analytical sequence and/or service request) should be performed per quarter. These audits include random selections of initial calibration, analytical sequence and/or service request for a method or methods. They are selected in such as way so that the same analyst or analysis is not audited in sequential quarters. However, this may be necessary if requested by the Laboratory Manager or other personnel, in relation to a complaint, or in conjunction (or as a result of) with an internal or external audit. These audits are conducted in accordance with the *SOP for Electronic-Data Auditing.*

14.2 Managerial Review

The laboratory management conducts an annual review of the quality system including the testing and calibration activities. This review is performed to ensure the quality system's continuing suitability and effectiveness and to introduce any necessary change or improvements in the system and/or laboratory operations including any additional training needs for laboratory

UNCONTROLLED COPY

personnel. The review takes into account reports from managerial and supervisory personnel, internal audits, and assessments by external bodies, proficiency tests, and any changes in the volume and type of work undertaken, feedback from clients, corrective actions and other relevant factors. This review is conducted in accordance with the requirements stated in the *SOP for Managerial Review.*

Table 14-1

ACCREDITATIONS AND REGISTRATIONS

- American Industrial Hygiene Association (AIHA)
  Industrial Hygiene Laboratory Accreditation Program Laboratory
  Laboratory # 101661
- State of California, Department of Health Services, Environmental Laboratory Accreditation Program
  Certification No. 2380
- State of New York, Department of Health
  Environmental Analyses/Air and Emissions (NELAP)
  Laboratory ID No. 11221
- State of Arizona, Department of Health Services
  License No. AZ0550
- State of New Jersey, Department of Environmental Protection (NELAP)
  Laboratory ID: CA009
- State of Oregon, Environmental Laboratory Accreditation Program (NELAP)
  Laboratory ID: CA200007-001
- Commonwealth of Pennsylvania, Department of Environmental Protection Bureau of Laboratories
  Registration Number: 68 3307

Note 1: Refer to Attachment E for the corresponding Certificates and Scope of Accreditations/Parameters.
Note 2: This Quality Assurance Manual is revised annually and the Certificates, Scope of Accreditations/Parameters are revised annually (where necessary). During this interim period Certificates may expire and the Scope of Accreditations/Parameters may change; therefore, these may not be updated until the annual revision. However, current Certificates and Scope of Accreditations/Parameters are on file and are on display in the front lobby. Updated accreditation documentation is also available upon request.

UNCONTROLLED COPY

15.0 INSTRUMENTATION AND INSTRUMENT MAINTENANCE

All equipment is properly maintained, inspected and cleaned and all maintenance activities documented and retained on file. The laboratory furnishes all items of equipment required for the correct performance of tests. However, in cases where the laboratory requires the use of equipment outside of its permanent control, the lab makes every effort to ensure that relevant and minimal performance requirements are met.

15.1 Preventive Maintenance

Preventive maintenance is a crucial element of the Quality Assurance program. Instruments at CAS/SIMI (e.g., GC/MS systems, gas and liquid chromatographs, etc.) are maintained by qualified, in-house personnel or outside professional agencies if necessary. All instruments are operated and maintained according to the instrument operating manuals. In addition, all routine and special maintenance activities pertaining to the instruments are recorded in instrument maintenance logbooks. The maintenance logbooks used at CAS/SIMI contain extensive information about the instruments used at the laboratory as well as the dates and results of calibrations. When performing maintenance on an instrument (whether preventive or corrective), additional information about the problem, attempted repairs, etc. is also recorded in the logbook. Typical logbook entries follow the guidelines set forth in the *Standard Operating Procedure for Making Entries into Logbooks and onto Benchsheets.*

The Laboratory Manager has the responsibility for ensuring that routine maintenance is performed. In the case of non-routine repair of capital equipment, Laboratory Manager is responsible for providing repair, either by assigning the repair to a qualified analyst or by acquiring on-site manufacturer repair. The laboratory maintains a critical parts inventory, which includes the items needed to perform the preventive maintenance procedures listed in Table 15-1. This inventory or "parts list" also includes the items needed to perform any other routine maintenance and certain in–house, non-routine repairs such as GC/MS jet separators and electron multipliers. Preventive maintenance procedures, frequencies, etc. are available for each instrument used at CAS/SIMI and are listed in Table 15-1, method SOPs or in the operating or maintenance manuals provided with the equipment at the time of purchase.

15.2 Out of Service Instruments

Samples are not analyzed on any instrument that is in need of repair. Any instrument that has been shown by verification or otherwise to be defective is taken out of service, clearly identified and wherever possible stored at a specified place until it has been repaired. All maintenance must be complete and the instrument either successfully calibrated or the calibration verified prior to the analysis of samples.

UNCONTROLLED COPY

15.3 New Instrumentation

An initial demonstration of analytical control is required on every instrument used at CAS/SIMI before sample analyses may proceed. If an instrument is modified or repaired, a return to analytical control is required before subsequent sample analyses can continue.

UNCONTROLLED COPY

TABLE 15-1

PREVENTIVE MAINTENANCE PROCEDURES		
Instrument	**Activity**	**Frequency**
Gas Chromatographs	Replace septum	As required
	Check system for gas leaks	With cylinder change/Open system
	Check for loose/fray wires and insulation	As required
	Replace injection port liner	As required
	Replace trap(VOA)	As required
	Polish PID lamp	As required
	Change PID O-rings	As required
	Clean PID lamp window	As required
	ECD wipe test	Every 3 years
	Replace ECD source	As required
	Clean FID	As required
	Hall detector electrolyte charge	As required
	Clean Hall detector cell	As required
	Replace Hall detector reactor tube/Teflon connecting tube	As required
	Change TCD assembly	
	SCD – Change reaction tube	As required
	FPD – Replace O-ring seal	As required
	PDD – Check for leaks	As required
	Catalyst check	Annually
GC/MS	Change Semi-VOA capillary column	Every 2 months or as required
	Change Semi-VOA injection port septum	As required
	Change Semi-VOA injection port liner	As required
	Replace trap (VOA)	As required
	Clean ionizer source	As required
	Change filament	As required
	Clean quadrupole rods	As required
	Adjust quadrupole rods	As required
	Change electron multiplier	As required
	Vacuum System:	
	• Mechanical pumps: change oil, change trap pellets (HP only)	Check every 6 months, check level monthly, change if necessary
	• Diffusion pump: check oil	Annually, change as required
	• Turbo pump: change oil, check cooling fan	As required
	Air Preconcentrators/Autosampler:	
	• Change traps	As required
	Computer System:	
	• Clean cooling fans	Quarterly
	• All PCBAs: reseat boards, cables	As required
HPLC	Replace/clean check valve filter	As required
	Replace lamp UV/vis detector	As required
	Replace flow cell	As required
	Check flow	Quarterly
Analytical Balances	Clean pan and compartment	Prior to and after use
	Check with Class "S" traceable weights	Prior to use
	Field service	Annually
Refrigerators and Freezers	Monitor Temperature	Daily
	Adjust Temperature	As required
	Clean	As required
Restek Thermal Gas Purifier	Check getter tube	Monthly, change as required

UNCONTROLLED COPY

16.0 CORRECTIVE ACTION

Applicable problems, as well as the corresponding corrective actions taken, are documented on Nonconformity and Corrective Action Reports (NCAR) as a means to investigate and prevent recurrence (See Figure 16-1, form may be revised assuming all current topics are included) following the requirements in the *Standard Operating Procedure for Nonconformity and Corrective Action Documentation.* This SOP describes a systematic procedure for the identification of nonconformities, investigation into the causes, the necessary actions to take, as well as the procedures for notifying affected parties. The laboratory has implemented general procedures to be followed to determine when departures from documented policies, procedures and quality control have occurred. These procedures include specifying responsibility for adhering to and implementing standard operating procedures, defining how an analyst shall treat unacceptable QC measurements and procedures for the documentation and review of subsequent corrective actions.

An evaluation of nonconforming work including its significance and acceptability is performed and if it is determined that it could recur or that there is doubt about the compliance of the laboratory's operations with its own policies and procedures, appropriate corrective action procedures are followed. The corrective actions taken are to a degree appropriate to the magnitude and the risk of the problem and are based on the nonconformity assessment. If is determined that the nonconformity has put data into question, Laboratory Management along with the Quality Assurance Program Manager has the responsibility to ensure the client is notified and that any affected data is recalled, test reports are withheld, and/or the appropriate work is halted. It is also the responsibility of the Laboratory Manager and the Quality Assurance Program Manager to authorize any resumption of work once corrective action has been taken and it has been determined that data is no longer affected.

Every laboratory employee has the responsibility to initiate the process to restore normal function to the system. Therefore, anyone who identifies a nonconformity or problem may initiate a corrective action. The Quality Assurance Program Manager reviews all corrective actions, ensuring that the appropriate personnel have taken effective corrective action. If a potential problem develops that cannot be solved directly by the responsible analyst, the supervisor, Project Manager, Laboratory Management and/or the Quality Assurance Program Manager may examine and pursue alternative solutions.

In general, corrective action may take several forms and may involve a review of the calculations, a check of the instrument maintenance and operation, a review of analytical technique and methodology, and reanalysis of quality control and field samples. The NCAR form is utilized for all corrective action documentation including errors, deficiencies, deviations, laboratory events, or data that falls outside of established acceptance limits and their resolutions. The original form is added to the raw data file of each affected job, if applicable and a copy is filed with the QAPM and other job files, where necessary. The QAPM periodically reviews all NCARs looking for chronic, systematic problems that require a more in-depth investigation and alternative correction action consideration. The Quality Assurance Program Manager is also responsible for initiating corrective actions due to a performance audit, check sample problem or internal system audit. Again, the QAPM maintains and periodically reviews all completed NCARs for patterns or persistence of specific problems.

UNCONTROLLED COPY

16.1 Root Cause Analysis

Each investigation (root cause analysis) is different and is due to the type and source of the nonconformance, complexity of the problem and the range of impact. No data shall be reported until the root cause or causes have been determined and corrected or it has been demonstrated that the issue was random and that data is no longer affected. The procedure for determining root cause is dependent upon five basic areas and these areas are the primary cause for nonconformities and include personnel, samples, methods, controls and data. Depending upon the source of the nonconformance each one of these areas may need to be addressed and determined if any or all, had a contributing affect on the nonconformance. This is done on the NCAR, whenever possible. There are some cases where the nonconformance was beyond the control of the laboratory and this case is noted on the form. The chart presented below and the accompanying points are not intended to be all inclusive but to give guidance to the investigator(s). The nature of the matter requiring corrective action will dictate the starting point in the investigation.

Work Flow

A - Personnel	B - Sample	C - Method	D - Controls	E - Data
Policies	Log-in	Validation	Preparation	Sample Trail
Procedures	Routing	Reagents	Handling/Storage	Logbook entries
Training	Storage	Instrumentation	Control Charts	Calculations
				Software
				Final Report

A. Personnel

- Interviews: Interviewing all employees involved in the work associated with the affected sample(s) is a key element of the investigation.
- Training: What was the level of expertise of the staff members involved in the matter under investigation? Could any training or skill deficiencies be a causal factor?

B. Sample

- Were all minimum sample receipt criteria met? Was anything unusual about the sample(s) noted upon receipt?
- Log-in: Check for discrepancies in the log-in records. Can the paperwork received with the sample(s) be reconciled with the log-in?
- Routing: Was the sample split or simply transferred from one employee to another? If split, was there a written procedure (record?)? If transferred, is the chain of custody intact? Were analyses performed by two or more units within the laboratory?
- Storage: Were the sample(s) stored properly upon receipt and up to the time of analysis?

C. Method

- Was the technical procedure followed? Are there deficiencies in the procedure as written?

UNCONTROLLED COPY

- Validation: Review records compiled during the validation of the method? Have any of the established method parameters changed over time?
- Reagents: Check the preparation of standards, QC check of reagents and any test supplies having a critical impact on the test results.
- Instrumentation: Were the calibration procedure requirements carried out? If the event under investigation is occurring over a given time period, it is important to look back into the calibration history of the instrument. Review the instrument logbook records.

D. Controls

- Critically review all aspects of the QC data itself.
- Preparation: Review all preparation steps for the controls, e.g. if a spike was used, was the spiking procedure followed?
- Handling/Storage: Were control material(s) properly stored prior to use. Are there storage issues regarding the control samples during the analysis time frame? Had any control materials expired?
- Control Charts: Review the raw data and its transfer to the control charts carefully. Check the formulae embedded within the spreadsheet for automatic calculations.

E. Data

- Review the raw data carefully. Transcription or transposition errors can be culprits.
- Sample Trail: Check for gaps from sample receipt until the final report was issued.
- Logbook entries: Can the history of the sample be reconstructed from the logbook(s) used?
- Calculations: Recheck the calculations.
- Software: Insure the integrity of the formulas used for computer calculation steps.
- Final Report: Is all the information provided on the final report accurate? Are there any inconsistencies between the final report and the analytical history traced via the investigation?

16.2 Preventive Action

The identification of needed improvements, continual improvements and potential sources of nonconformance, either technical or concerning the quality system, are identified through a number of avenues including but not limited to managerial reviews, audits (both internal and external), client feedback, and input from laboratory personnel. Additionally, this procedure involves the evaluation of analytical data, control charts (including any trends), proficiency test results, complaints and results from blind samples. If it is deemed necessary based on information provided, the laboratory shall develop an action plan, which will be implemented and monitored to reduce the likelihood of the occurrence. The procedure for preventive action shall include a manner with which to determine the effectiveness of preventive action. Documentation may include the use of a Nonconformity and Corrective Action form or some other form as long as all documentation and outcomes are noted and approved.

UNCONTROLLED COPY

Figure 16-1
Nonconformity and Corrective Action Report (CAS/SIMI)

CLIENT AFFECTED / JOB(S) / SAMPLES / SYSTEMS **NCAR No.:**_____

NONCONFORMITY

Procedure (SOP Affected): _____ Instrument/System: _____ Event Date: _____

EVENT: ☐ Missed Hold Time ☐ QC Failure ☐ Leaking Canister ☐ Pressurization Error ☐ Other

Detailed Description:

Originator: _____ Date: _____

CORRECTIVE ACTION AND IMMEDIATE ACTION TAKEN

Re-establishment of conformity must be demonstrated and documented. Describe the steps that were taken, or are planned to be taken to correct the particular Nonconformity and prevent its reoccurrence.

Immediate Action:
☐ Flag Affected Data ☐ Revise Report ☐ Note in Case Narrative ☐ Other: _____

ROOT CAUSE ANALYSIS

☐ Calculations ☐ Human Error ☐ Instrumentation ☐ Lab Control Charts ☐ Policies and/or Procedures ☐ Training
☐ Sample Documentation ☐ Sample Log-in ☐ Sample Preparation ☐ Sample Storage ☐Software/Templates ☐ Other

Detailed Description:

NONCONFORMITY NOTIFICATION AND APPROVAL/ACCEPTANCE OF CORRECTIVE ACTION

Supervisor Notification & Approval of Corrective Action _____ Date_____

PM Notified? ☐ NO ☐ YES Customer Notified by ☐ Telephone ☐ Email ☐ Fax ☐ Narrative ☐ Not notified

Project Manager: _____ Date: _____ Comments:_____

_____

Error: ☐ Random ☐ Systematic Is Data Affected? ☐ Yes ☐ No Is Data Acceptable? ☐ Yes ☐ No
Is Corrective Action required, implemented and determined to be effective? ☐Yes ☐No ☐ NA

QAPM Verification and Approval of Corrective Action _____ Date: _____
Comments: _____

_____

UNCONTROLLED COPY

17.0 QUALITY ASSURANCE REPORTS

Quality assurance requires an active, ongoing commitment by CAS/SIMI personnel at all levels of the organization. Information flow and feedback mechanisms are designed so that analysts, supervisors and managers are aware of quality assurance issues in the laboratory.

The Quality Assurance Program Manager prepares a quarterly report to management detailing all QA activities from the past three months. The purpose of this report is to keep the Laboratory Manager and corporate QA Director apprised of these activities and to document the actions taken to correct problems that have impacted laboratory operations. This report includes discussion of the following issues related to laboratory QA/QC:

- Training
- QA Manual and SOP Reviews
- Audits (Internal and External)
- Corrective Actions (including patterns or persistent NCARs)
- Certifications, Accreditations, and Approvals
- Method Detection Limit (MDL) Studies Status
- Proficiency Documentation
- Statistical Control Limits Status
- Performance Evaluation Studies
- Current QA Issues, Priorities, and Accomplishments.

Any problems noted by the Laboratory Manager are then discussed either during the regularly scheduled staff status meetings or at a specially scheduled management meeting. The Laboratory Manager performs an annual documented review of the quality system to identify any necessary changes or improvements to the quality system.

UNCONTROLLED COPY

18.0 PERSONNEL TRAINING

All laboratory employees, including part-time, full-time and contracted support personnel, whether employment is technical or key support, the laboratory ensures that such personnel are supervised and competent and that they work in accordance with the laboratory's quality system. When any staff member is undergoing training, appropriate supervision is provided.

18.1 Qualification

Technical position descriptions are available for all employees, regardless of position or level of seniority. These documents are maintained by the Human Resources personnel and are available for review. In order to assess the technical capabilities and qualifications of a potential employee, all candidates for employment at CAS/SIMI are evaluated, in part, against the appropriate technical job description. Any previously acquired skills or abilities of a new employee are entered into the database at the beginning of their tenure with CAS/SIMI. The Human Resources personnel also record the various technical abilities of all employees via a centralized database, and all skills acquired by an employee while in the employment of CAS/SIMI are added to the employee's permanent file. Information in the database includes the employee's name, a description of the skill including, where appropriate, the method reference, and the date the training was completed.

18.2 Employee Orientation

There is an employee orientation program given to every new employee. The program consists of the review of the Employee Handbook on the first day of employment which includes business ethics, confidentiality, conflict of interest and the laboratory's open door policy. Every employee is required to sign the Handbook Acknowledgment Form after reading the Employee Handbook. In addition, new employees are required to review and sign both the CAS Holdings Inc. Confidentiality and Conflicts of Interest Employee and Commitment to Excellence in Data Quality Agreements at the beginning of employment and every year there after. The Quality Assurance Program Manager provides a thorough quality assurance program orientation to each new employee, regardless of position, which includes overviews of the quality assurance program, policies and procedures, documentation practices and an understanding and compliance of the quality assurance manual, which they are required to read.

18.3 Initial and Continuing Proficiency

Training begins the first day of employment at CAS/SIMI when the company policies are presented and discussed. In addition, the new employee must become familiar with all applicable administrative procedures, ethical behavior (refer to Section 6.3 for additional information) and the contents of this document. Training in analytical procedures typically begins with the reading

UNCONTROLLED COPY

of the Standard Operating Procedure (SOP) for the method they are expected to carry out. Hands-on training begins with the observation of an experienced analyst performing the method, followed by the trainee performing the method under close supervision, and culminating with independent performance of the method on quality control samples. A periodic demonstration of proficiency is required to demonstrate and maintain qualification, as described in the *Standard Operating Procedure for Documentation of Training.* However, documented demonstrations of proficiency are required every six months for those analysts which perform analyses associated with the laboratory's American Industrial Hygiene Association (AIHA) accreditation. Once training is complete the Quality Assurance Program Manager and/or the Laboratory Manager will document the authorization of certain personnel to perform specific analyses and operate any associated equipment as well as those personnel performing other critical job functions.

CAS/SIMI encourages its personnel to continue to learn and develop new skills that will enhance their performance and value to the Company. Ongoing training occurs for all employees through a variety of mechanisms. The "CAS University" education system, external and internal technical seminars and training courses, laboratory-specific training exercises and performance of external (independent) PE sample analyses are all used to provide employees with professional growth opportunities. Training records are kept in a file created for each employee. This file is kept and maintained in accordance with the guidelines contained in the *Standard Operating Procedure for Documentation of Training.* The department supervisor and other personnel, where appropriate, are responsible for the training and documentation of training activities. Also, the QAPM is responsible for maintaining employee training record files including those for both method and administrative procedures.

18.4 Environmental Health and Safety

Safety and QA/QC requirements are integral parts of all technical SOPs and, consequently, are integral parts of all training processes at CAS/SIMI. Safety training begins with the reading of the *Environmental, Health and Safety Manual.* All employees must receive a safety orientation, which includes a safety tour of the laboratory. In addition, technical employees are required to attend quarterly safety training sessions during which the various aspects of laboratory safety are discussed.

18.5 Training Needs

The policy for CAS/SIMI is to identify the ongoing training needs of all laboratory personnel and to provide relevant training with respect to continuing requirements of the laboratory. The identification of these needs is determined based on findings from internal audits, external audits and managerial reviews (refer to Section 14.2), evaluations of industry including the volume and type of work undertaken, corrective actions, and personnel changes.

UNCONTROLLED COPY

19.0 REFERENCES FOR ANALYTICAL PROCEDURES

The analytical methods used at CAS/SIMI generally depend upon the end-use of the data. Since some work involves the analysis of vapor phase samples for regulatory purposes, specified federal and/or state testing methodologies are used and followed closely. Several factors are involved with the selection of analytical methods to be used in the laboratory. These include the method detection limit, the concentration of the analyte being measured, method selectivity, accuracy and precision of the method, the type of sample being analyzed, and the regulatory compliance objectives. Typical methods used at CAS/SIMI are taken from the following references. In addition, applicable policies, quality standards and other reference documents have been included which are utilized as references for method performance and the continued maintenance of the laboratory's quality system.

- *EPA Compendium of Methods for the Determination of Toxic Organic Compounds in Ambient Air*, Second Edition, EPA/625/R-96-010b, January 1999.
- *NCASI Methods Manual,* July 2000.
- *Test Methods for Evaluating Solid Waste, Physical/Chemical Methods*, SW-846, Third Edition, 1986 and Updates I (7/92), II (9/94), IIA (8/93), IIB (1/95), and III (12/96). See Chapters 1, 2, 3, and 4.
- *California Environmental Protection Agency Air Resources Board, Methods for Determining Emissions of Toxic Air Contaminants from Stationary Sources,* Volume 3, July 28, 1997.
- *Annual Book of ASTM Standards*, American Society for Testing and Materials, Philadelphia, PA.
- *National Institute for Occupational Safety and Health (NIOSH) Manual of Analytical Methods*, U.S. Department of Health and Human Services, Third Edition (August 1987), Fourth Edition (August 1994).
- *OSHA Analytical Methods Manual*, U.S. Department of Labor, Occupational Safety and Health Administration
- 40 CFR Part 60, Test Methods for Standards of Performance for New Stationary Sources, Appendix A.
- 40 CFR Part 63, National Emission Standards for Hazardous Air Pollutants for Source Categories, Appendix A.
- *Laboratory Methods of Analysis for Enforcement Samples*, South Coast Air Quality Management District.
- *EPA Compendium of Methods for the Determination of Air Pollutants in Indoor Air*, U.S. Environmental Protection Agency, Research Triangle Park, NC, Draft (September 1989).
- American Industrial Hygiene Association, *LQAP Policy Modules,* December 2004, Effective Date: April 1, 2005.
- National Environmental Laboratory Accreditation Conference, *Quality Standards Chapters 1-5,* June 5, 2003.
- ISO/IEC 17025:1999(E), *General Requirements for the Competence of Testing and Calibration Laboratories,* First Edition 1999-12-15.
- *SKC 575 Series Passive Sampler Rate/Selection Guide*, Form #37021, Rev 0012.
- 3M Organic Vapor Monitor Sampling and Analysis Guide, *Organic Vapor Monitors 3500/3510 and Organic Vapor Monitors 3520/3530*, September, 1996.

UNCONTROLLED COPY

APPENDIX A

ORGANIZATIONAL OUTLINE & RESUMES OF KEY PERSONNEL

UNCONTROLLED COPY

Columbia Analytical Services, Inc.

Simi Valley, California
Laboratory Organization

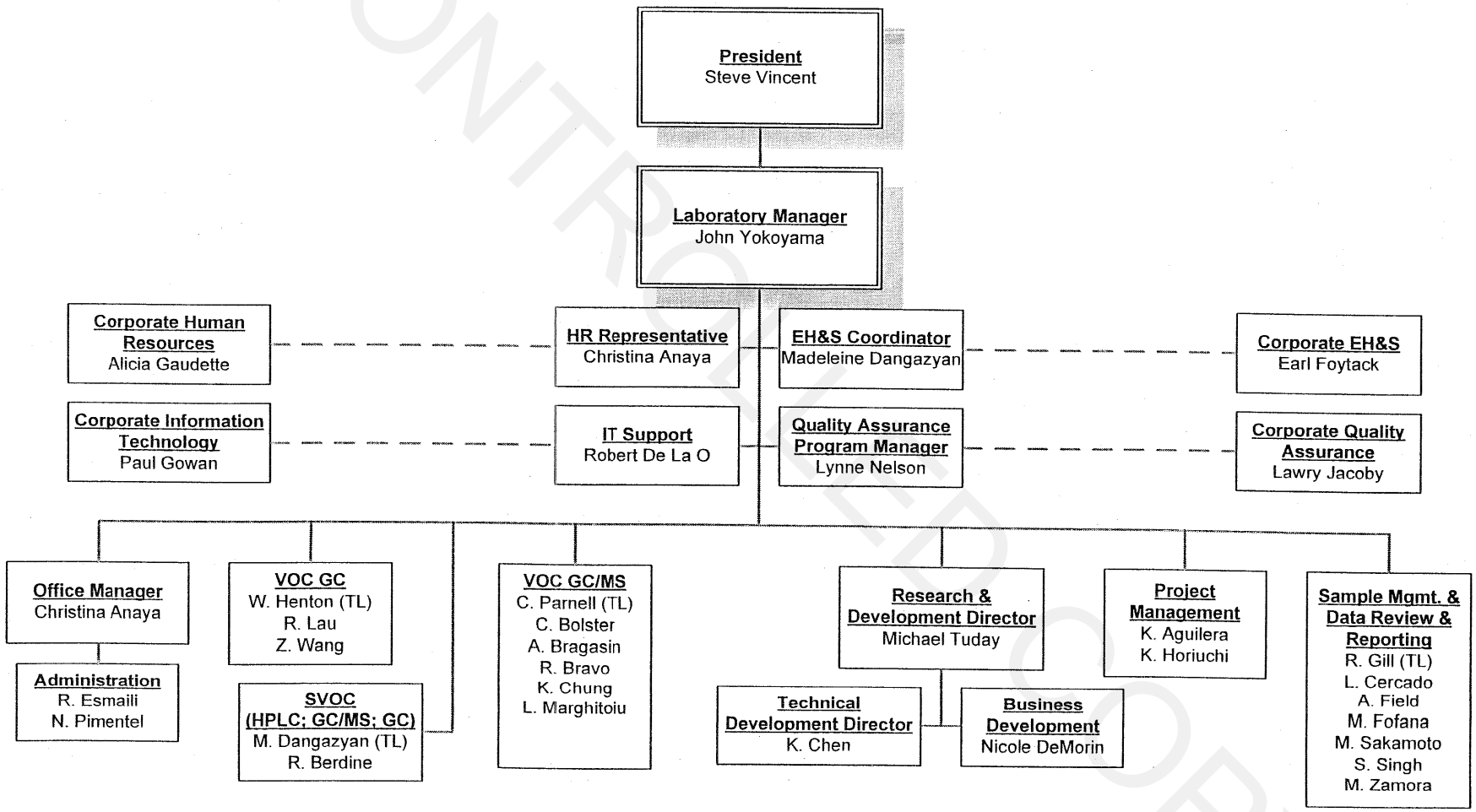

Revised 02/06/2006

UNCONTROLLED COPY

KATHLEEN AGUILERA

1989 TO PRESENT

Columbia Analytical Services INC.
An Employee - Owned Company

Columbia Analytical Services, Inc., 2665 Park Center Dr., Suite D, Simi Valley, CA 93065 (805) 526-7161

Current Position	**PROJECT MANAGER** – 1997 to Present
Responsibilities	Responsibilities include interfacing with clients to provide technical project management and customer service, including project scheduling, tracking and consulting to determine appropriate sampling and analytical protocols. Coordinates with the laboratory and administration to ensure that analyses are properly executed and meets the clients needs.
Experience	**GC/MS Analytical Chemist,** *Columbia Analytical Services, Inc., DBA Performance Analytical Inc., Los Angeles, California,* 1994-1997. Analysis of air samples using EPA compendium methods TO-1, TO-2 and TO-14 using cryogenic concentration and thermal desorption techniques on whole air samples collected in summa canisters, Tedlar bags, and solid sorbent air samples. Proficient in the interpretation of mass spectra. Responsible for the preparation and quality control verification of solid sorbent sampling media for EPA Compendium methods TO-1 and TO-2. **GC/MS Analytical Chemist,** *Performance Analytical Inc., Canoga Park, California,* 1992-1994. Responsibilities listed above. **GC Analytical Chemist,** *Performance Analytical Inc., Canoga Park, California,* 1989-1992. Performed analyses of air samples for reduced sulfur compounds, hydrocarbon distribution and speciation, fixed atmospheric gases and total gaseous non-Methane organics. Performed analyses of soil and water samples for TPHg (mod. 8015) and BTEX. Performed extractions and analyses of CARB, NIOSH, OSHA and EPA 8000 series methods. Also performed metals analysis using flame and graphite furnace atomic absorption spectrophotometry (AA, GFAA).
Education	**BA, Chemistry,** *California State University – Northridge, Northridge, California,* 1989
Affiliations	American Chemical Society

UNCONTROLLED COPY

REBECCA BERDINE

2005 TO PRESENT

Columbia Analytical Services INC.
An Employee - Owned Company

Columbia Analytical Services, Inc., 2665 Park Center Drive, Suite D, Simi Valley, CA 93065 (805) 526-7161

Current Position

CHEMIST – 2005 to Present

Responsibilities

Preparation and analysis of indoor air, ambient air and source emission samples by GC and GC/MS methods for Polynuclear aromatic hydrocarbons, PCBs, pesticides and other semi-volatile compounds. Additional responsibilities include standard preparation, instrument maintenance, and real time data reduction; participate in peer review process, and good practice of all QA/QC requirements.

Documentation of Demonstration of Capabilities is available for review.

Experience

Laboratory Supervisor, Extractions, *Zymax Envirotechnology and Forensics, San Luis Obispo, CA, 1999 to 2005.* Extracted soil, aqueous, oils and water samples through 3510/3550 method; sample analysis for TPH, BNA's, 1,4-dioxane, PCB's, pesticides and herbicides; performed maintenance on mass spectroscopy; gas chromatography; infrared spectroscopy; analyzed samples for 8270, 8081/8082, 8151, 504.1, 413and 418; supervise safety practices and procedures; write SOP's; organization of labs duties and ensure all projects were completed accurately.

Veterinary Technician, *Coast Veterinary Clinic, Morro Bay, CA.,* 1997 to 1999. Performed preliminary physical exams; administered and monitored anesthetic; surgical assistant, performed dentals, took x-rays; collection and analysis of blood, urine and fecal samples; administered vaccines, medications, treatments and intravenous catheters.

Veterinary Technician, *VCA Parkwood Animal Hospital, Woodland Hills, CA, 1994 to 1996.*

Performed all technical work as described above at Coast Veterinary Clinic

Teacher's Assistant, *Los Angeles Unified School District, Canoga Park, CA, 1993 to 1996.*

Worked in domestic violence and taught reading, English and math skills for kindergarten-12th grade students.

Education

BS, Dairy Science, *California Polytechnic State University, San Luis Obispo, CA,* 2005.

UNCONTROLLED COPY

CHANEY BOLSTER

2005 TO PRESENT

Columbia Analytical Services, Inc., 2665 Park Center Drive, Suite D, Simi Valley, CA 93065 (805) 526-7161

Current Position

CHEMIST – 2005 to Present

Responsibilities

Analyzing indoor air, ambient air and source emission samples by GC/MS methods, standard preparation, perform maintenance on instruments when required, real time data reduction, participate in peer review process, and good practice of all QA/QC requirements.

Documentation of Demonstration of Capabilities is available for review.

Experience

Analyst I, *Columbia Analytical Services Holdings Inc. Kelso, Washington,* 2004-2005. Performed a variety of analytical tests within the General Chemistry laboratory according to EPA Methodologies including Ion Chromatography, total sulfur, and solids. Saturday crew member responsible for performance of all short hold time methods including microbiology methodologies.

2002-2004. Temporary employee (summers) performing a variety of analytical tests including grain size, total organic carbon, total suspended solids, total dissolved solids, alkalinity, acidity, and chemical oxygen demand. Additionally, performed colorimetric methods including ortho-phosphorous, total-phosphorous, hexavalent chromium, and nitrite as nitrogen.

Toxicology Risk Assessment Procedure (ToxRap) Assistant, *Environmental Health Sciences Center, Oregon State University, 2001-2003.* Developed curriculum alignment for K-12 state benchmarks. Prepared workshop materials for K-12 grade teachers. Assisted in workshop presentations.

Education

BS, Biology, *Oregon State University, Corvallis, Oregon,* 2004

UNCONTROLLED COPY

ARISTOTLE B. BRAGASIN

2004 TO PRESENT

Columbia Analytical Services INC.
An Employee - Owned Company

Columbia Analytical Services, Inc., 2665 Park Center Dr., Suite D, Simi Valley, CA 93065 (805) 526-7161

Current Position

CHEMIST – 2004 to Present

Responsibilities

Analyzing indoor air, ambient air and source emission samples by GC/MS methods, standard preparation, perform maintenance on instruments when required, real time data reduction, participate in peer review process, and good practice of all QA/QC requirements.

Documentation of Demonstration of Capabilities is available for review.

Experience

Scientist II, GC/MS VOA Laboratory, *Columbia Analytical Services, Canoga Park, California, 1998-2004.* Responsible for Volatile GC/MS sample analysis of soil, groundwater and wastewater according to SW-846 Method 8260B and EPA 624. Utilize Tekmar 2016, OI Analytical DPM-16, and Archon autosampler, Tekmar 2000, 3000, and 3100 and OI Analytical 4560 concentrators, HP5890 and 6890 GC systems with HP 5971, 5972, and 5973 MSD's. Also responsible for reducing and reporting data according to standard operating procedures and contractual requirements. Perform TCLP-ZHE extractions, routine troubleshooting and instrument maintenance, and the storage and disposal of VOA samples. Review GAS/BTEX analytical data generated for completeness and contractual requirements according to SW-846 methods.

Analyst III, Sample Management Office, *Columbia Analytical Service, Inc., Canoga Park, California,* 1996-1998. Duties primarily as listed below.

Analyst II, Sample Management Office, *Columbia Analytical Services Inc., Canoga Park, California*, 1995-1996. Primary responsibilities include logging samples and requested analyses, distribution of service request forms to each department, storage and disposal of samples, and shipment of samples to other laboratories. Logging jobs into the LIMS system.

Lab Technician, *Pace Inc., Camarillo, California,* 1995. Duties included extraction of cyanide and phenols via steam distillation. Determined amounts of cyanide, phenols, phosphorus, and nitrogen using Lachat Automated Analyzer. Determined amounts of oil and grease, total dissolved solids, total suspended solids, and bacteria in samples.

Laboratory Assistant, *Aerotek Lab Support, Gardena, California*, 1995. Cleaned and sterilized glassware in the protein chemistry department of Amgen Inc., Thousand Oaks, California.

Specimen Processor, *Olsten Staffing Services, Thousand Oaks, California*, 1994. Data entry of patient information and requested tests. Separated and labeled specimens for different departments at Physicians Clinical Laboratory, Newbury Park, California.

Education

BS, Biochemistry, *California Polytechnic State University at San Louis Obispo, San Louis Obispo,* California, 1995

UNCONTROLLED COPY

RUSTICO "RUSTY" BRAVO

2004 TO PRESENT

Columbia Analytical Services INC.
An Employee - Owned Company

Columbia Analytical Services, Inc., 2665 Park Center Drive, Suite D, Simi Valley, CA 93065 (805) 526-7161

Current Position	**CHEMIST**– 2004 to Present
Responsibilities	Analyzing indoor air, ambient air and source emission samples by GC/MS methods, standard preparation, perform maintenance on instruments when required, real time data reduction, participate in peer review process, and good practice of all QA/QC requirements. **Documentation of Demonstration of Capabilities is available for review.**
Experience	**Chemist,** *FGL Environmental, Santa Paula, CA,* 1995-2004. Primary operator of HP ICP/MS and Thermo ICP/MS; backup operator of TJA Trace ICP/AES and Leeman P5200; senior chemist of the Metals Department, supervising trace operator and sample prep technican; maintained and troubleshoot instrumentation and methodologies. **Chemist,** *Pace, Inc., Camarillo, CA,* 1992-1995. Primary operator of Varian AA and GFAA, and of Leeman PS200 Hg analyzer; backup operator of TJA Trace ICP/AES; sample prep of CARB and BIF trains.
Education	**B.S., Chemistry,** *University of Santo Tomas, Manila, Philippines,* 1986.

UNCONTROLLED COPY

LLESENIA CERCADO

2000 TO PRESENT

Columbia Analytical Services INC.
An Employee - Owned Company

Columbia Analytical Services, Inc., 2665 Park Center Drive, Suite D, Simi Valley, CA 93065 (805) 526-7161

Current Position	**TECHNICIAN** – 2003 to Present
Responsibilities	Responsibilities include waste disposal, canister conditioning and preparation, fulfillment of media requests; shipping and occasionally receiving samples. Additional responsibilities include training within the department, of flow controller and critical orifice calibration and checks, sampling media inventory and pressure/vacuum gauge inventory and calibration checks between annual metrology calibrations.
Experience	**Analyst II,** *Columbia Analytical Services, Inc., DBA Performance Analytical, Inc., Los Angeles, California,* 2000-2003. Responsibilities include preparation of samples using Soxhlet, shakeout and sonication extraction. Preparation of indoor air and industrial hygiene samples using solvent desorption. Gas Chromatographic screening of samples collected in Tedlar bags and summa canisters for volatile organic compounds
Education	**CERTIFICATE, Chemical Technology,** *Los Angeles Trade Technical College, Los Angeles, California,* 2000.

UNCONTROLLED COPY

KU-JIH CHEN

1989 TO PRESENT

Columbia Analytical Services INC.
An Employee - Owned Company

Columbia Analytical Services, Inc., 2665 Park Center Drive, Suite D, Simi Valley, CA 93065 (805) 526-7161

Current Position

DIRECTOR OF TECHNOLOGY DEVELOPMENT – 2000 to Present

Responsibilities

Responsible for the development and validation of sampling and analysis methods, new technology and laboratory automation.

Experience

Scientist VII, *Columbia Analytical Services, Inc., DBA Performance Analytical, Inc., Los Angeles, California,* 1994-2000. Responsibilities included operating the Gas Chromatography and Sample Preparation Laboratories, developing methods (previously developed the Total Combustion Analyzer for the measurement of reactive organic gases in stationary source samples, and the Determination of Reduced Sulfur Compounds and fixed atmospheric gases in POTW emissions, refinery and landfill gases), and serving as the laboratory's primary Industrial Hygiene Chemist.

Principal Chemist, *Performance Analytical, Inc., Canoga Park, California,* 1989-1994. Responsibilities listed above.

Extraction Laboratory Supervisor, *C-E Environmental Inc., Camarillo, CA,* 1984-1989. Responsibilities included supervising chemists, associate chemists, and technicians, preparing SOP's, analytical standards, and spiking solutions, serving as Primary Extraction Chemist for the Love Canal Habitability Study, and previously responsible for instrumental analysis using GC, LC, GC/MS, and AA.

Research & Development Chemist, *Paolyta Company, Taipei, Taiwan*, 1980-1984.

Research Chemist, *Panlabs Taiwan Ltd., Taipei, Taiwan*, 1975-1980.

Education

BS, Botany, *National Chung-Hsing University, Taipei, Taiwan.*

UNCONTROLLED COPY

KU CHUNG
2004 TO PRESENT

Columbia Analytical Services INC.
An Employee - Owned Company

Columbia Analytical Services, Inc., 2665 Park Center Drive, Suite D, Simi Valley, CA 93065 (805) 526-7161

Current Position	**CHEMIST**– 2004 to Present
Responsibilities	Analyzing indoor air, ambient air and source emission samples by GC/MS methods, standard preparation, perform maintenance on instruments when required, real time data reduction, participate in peer review process, and good practice of all QA/QC requirements. Additional responsibilities are analyzing ambient air, source emissions, and industrial hygiene samples using GC and HPLC. Preparation and analysis of air samples taken on various sorbent tubes for semi-volatile organic compounds. Determination of Carbonyls, Phenols and Cresols in ambient air and source emission samples using HPLC. Routine and necessary instrument maintenance. **Documentation of Demonstration of Capabilities is available for review.**
Experience	**Senior Chemist,** *American Analytics, Chatsworth, CA,* 2000-2004. Extensively involved in the development and implementation of new analytical procedures in the laboratory including standard published methodologies, specialized analytical methodologies for non-routine parameters and environmental forensics applications. Other duties included modifying and customizing LIMS (FoxPro 2.0) to generate customized report to fit client's request and evaluating various LIMS to replace current system.
Education	**BS, Biochemistry,** *UCLA, Los Angeles, CA,* 2000.
Affiliations	American Chemical Society (since 2001)

UNCONTROLLED COPY

MADELEINE DANGAZYAN

1999 TO PRESENT

Columbia Analytical Services, Inc., 2665 Park Center Drive, Suite D, Simi Valley, CA 93065 (805) 526-7161

Current Position

CHEMIST, Semi-Volatiles Team Leader – 2002 to Present

Responsibilities

Team leader for the Semi-Volatile group responsibilities are but not limited to training of chemists, peer review of analytical data, mentoring of junior analysts, standard operating procedure review and streamlining of methods. Duties also require performance reviews and development of direct reports. Environmental Health & Safety Coordinator responsibilities are to endure all employees follow safety protocol on site according to regulatory and corporate guidelines. Additional responsibilities are analyzing ambient air, source emissions, and industrial hygiene samples using GC and HPLC. Preparation and analysis of air samples taken on various sorbent tubes for semi-volatile organic compounds. Determination of Carbonyls, Phenols and Cresols in ambient air and source emission samples using HPLC. Routine and necessary instrument maintenance.

Documentation of Demonstration of Capabilities is available for review.

Experience

Chemist, *Columbia Analytical Services, Inc., 1999-2002.* Responsibilities included training of chemists, peer review of analytical data, mentoring of junior analysts, standard operating procedure review and streamlining of methods. Additional responsibilities are analyzing ambient air, source emissions, and industrial hygiene samples using GC and HPLC. Preparation and analysis of air samples taken on various sorbent tubes for semi-volatile organic compounds. Determination of Carbonyls, Phenols and Cresols in ambient air and source emission samples using HPLC. Routine and necessary instrument maintenance.

Analytical Chemist, *Air Products and Chemicals, Inc., Long Beach, California,* 1995-1999. Quality assurance analysis of EPA protocol gases utilizing GC, FTIR and NDIR. Preparation of personnel schedules, lead laboratory contact.

Undergraduate Research, *California State University at Northridge, Northridge, California,* 1993-1994. Assisted professor with improving and implementing student laboratory experiments to better utilize a GC/MS.

Education

BS, Chemistry, *California State University at Northridge, Northridge, California,* 1995.

UNCONTROLLED COPY

ROBERT DE LA O

1990 TO PRESENT

Columbia Analytical Services INC.
An Employee - Owned Company

Columbia Analytical Services, Inc., 2665 Park Center Drive, Suite D, Simi Valley, CA 93065 (805) 526-7161

Current Position	**SYSTEMS ANALYST, Information Technology** – 1995 to Present
Responsibilities	Responsible for generating reports, automating routine work and maintaining databases. Assist as a backup for sample receipt, acceptance and login and shipping sampling media out to clients.
Experience	**Administrator III,** *Columbia Analytical Services, Inc., DBA Performance Analytical, Inc., Los Angeles, California,* 1990-1995. Responsible for logging samples in, generating reports and invoicing. Shipping and Receiving.
	Assistant Manager, *May Company, North Hollywood, California,* 1990. Responsibilities included: employee scheduling, inventory control and making sure items were well stocked and clearly priced.
	Assistant Manager, *Sears Roebuck and Company, North Hollywood, California,* 1985-1990. Supervised 10 Departments (approximately 50 employees). Responsibilities included: employee scheduling, hiring, customer service/complaints, and assisting with opening and closing the store daily.
Education	**COURSEWORK, Computer Science,** *Moorpark College, Moorpark, California,* 1999 to present **COURSEWORK, Business and Computer Science,** *Los Angeles Valley College, Van Nuys, California,* 1990-1998. **COURSEWORK, Business and Computer Science,** *California State University at Northridge, Northridge, California, 1987-1990.*

UNCONTROLLED COPY

NICOLE M. DeMORIN

2002 TO PRESENT

Columbia Analytical Services INC.
An Employee - Owned Company

Columbia Analytical Services, Inc., 2665 Park Center Drive, Suite D, Simi Valley, CA 93065 (805) 526-7161

Current Position	**BUSINESS DEVELOPER and PROGECT MANAGER** – 2002 to Present
Responsibilities	Helps lead the sales, marketing and new business development efforts for the Simi Valley, California location. Responsible for new client development, communication of client requirements and acting as a liaison between the client and the laboratory to ensure ongoing improvement of client service.
Experience	**Certified Account Manager,** *Lab Support, Encino, California,* 2000-2002. Responsibilities included recruitment and placement of personnel in temporary positions within the laboratory industry. Build and maintain professional relationships with clients. Oversee activities at three Los Angeles branches, directly managing 2-3 branch account managers; and manage over 80 employees at more that 20 clients, accounting for over $3 million revenue. **Scientist II,** *Wyeth-Ayerst Research, Pearl River, New York,* 1994-2000. Worked in QC Raw Materials Department to support manufacturing and production operations. Performed all raw materials testing in accordance with USP and eGMP guidelines. Additional duties included performing analytical testing and research to support clinical and toxicological studies, including method development and validation, SOPs, and installation/operation protocols.
Education	**MS, Business Administration,** *Lubin School of Business, Pace University, White Plains, New York,* 2002. **BS, Chemistry,** *St. Lawrence University, Canton, New York,* 1993. **BA, Spanish,** *St. Lawrence University, Canton, New York,* 1993.
Affiliations	American Chemical Society (since 1994)

UNCONTROLLED COPY

ROBIN GILL

1991 TO PRESENT

Columbia Analytical Services INC.
An Employee - Owned Company

Columbia Analytical Services, Inc., 2665 Park Center Drive, Suite D, Simi Valley, CA 93065 (805) 526-7161

Current Position

DATA VALIDATION COORDINATOR AND TEAM LEADER – 2002 to Present

Responsibilities

Team leader responsibilities are evaluation and approval of work shifts, vacation requests, training and mentoring new data validation team members, in addition to yearly performance reviews to evaluate job achievements. Data validation responsibilities are for data review and validation as well as data package compilation, job tracking, archiving and the production of laboratory reports. Interacts with project managers and Quality Assurance Program Manager to ensure that all reports fulfill client requirements as well as QA/QC needs. Also serves as a backup for case narrative generation and manages the turn around times so that reports are distributed to the clients in a timely manner.

Experience

Project Manager III, Quality Control Coordinator, *Columbia Analytical Services, Inc., DBA Performance Analytical, Inc., Los Angeles, California,* 1994-2002. Responsibilities listed above.

Project Manager III, Quality Control Coordinator, *Performance Analytical Services, Inc., Canoga Park, California,* 1991-1994. Primarily responsible for data review and validation as well as data package compilation. Also responsible for job tracking, archiving and the production of laboratory reports.

Data Group Supervisor, *ABB Environmental, Camarillo, California,* 1980-1991. Supervised five employees in the Data Group Department. Responsible for data review and validation, document control, data package compilation, job tracking and archiving, and the organization and prioritization of workload.

UNCONTROLLED COPY

WADE H. HENTON

1994 TO PRESENT

Columbia Analytical Services INC.
An Employee - Owned Company

Columbia Analytical Services, Inc., 2665 Park Center Drive, Suite D, Simi Valley, CA 93065 (805) 526-7161

Current Position

CHEMIST, VOLATILE GAS CHROMATOGRAPHY TEAM LEADER – 2000 to Present

Responsibilities

Team leader for the Volatile Gas Chromatography group responsibilities are but not limited to training of chemists, peer review of analytical data, mentoring of junior analysts, standard operating procedure review and streamlining of methods. Duties also require performance reviews and development of his direct reports.

Documentation of Demonstration of Capabilities is available for review.

Experience

Scientist V, *Columbia Analytical Services, Inc., DBA Performance Analytical, Inc., Los Angeles, California,* 1995-2000. Responsibilities include analyzing indoor and ambient air, source emission, and industrial hygiene samples by GC and GC/MS methods.

Scientist IV, *Columbia Analytical Services, Inc., DBA Performance Analytical, Inc., Los Angeles, California,* 1994-1995. Responsibilities listed above.

Analytical Chemist, *Coast to Coast Analytical Services, Camarillo, California,* 1992-1994. Responsibilities included analyzing samples using EPA methods 625, 525 and 1625 as well as developing new methods for GC/MS testing.

Analytical Chemist, *Coast to Coast Analytical Services, Goleta, California,* 1991-1992. Responsibilities included analyzing samples using EPA methods 624 and 524.2 by GC/MS. Used GC/MS methods to perform fuel fingerprinting.

Analytical Chemist, *Combustion Engineering Environmental, Inc., Camarillo, California*, 1986-1991. Responsibilities included method development for GC and HPLC. Analysis of samples using EPA methods 608, 615, 631, 632 and SW846. Other methods used include 8080, 8010, 8020, 8150 and 8030. Oversaw data integrity for the GC Laboratory instrument data network. Data review.

Chemist, *Fortin Industries, Sylmar, California,* 1986. Research and Development and Quality Assurance/Quality Control on polymer products and metal coatings using differential scanning calorimeters, scanning electron microscope, AA, GC, and HPLC.

Education

BS, Chemistry, *University of California at Santa Barbara, Goleta, California,* 1985.
COURSEWORK, Chemistry and General Education, *Ventura College, Ventura, California*, 1982-1983.
COURSEWORK, Chemistry and General Education, *Moorpark College, Moorpark, California*, 1981-1983.

UNCONTROLLED COPY

KELLY M. HORIUCHI

2003 TO PRESENT

Columbia Analytical Services, Inc., 2665 Park Center Drive, Suite D, Simi Valley, CA 93065 (805) 526-7161

Current Position

PROJECT MANAGER – 2005 to Present

Responsibilities

Responsibilities include interfacing with clients to provide technical project management and customer service, including project scheduling, tracking and consulting to determine appropriate sampling and analytical protocols. Coordinates with the laboratory and administration to ensure that analyses are properly executed and meets the client's needs.

Experience

Data Validation Coordinator, ***Columbia Analytical Services, Inc., Simi Valley, CA, 2003-2005.*** Responsibilities included validation of analytical results produced by the laboratory. Verification of client analytical requests, sample information, and reporting formats. Interacts with project managers and Quality Assurance Program Manager to ensure that all reports fulfill client requirements as well as QA/QC needs. Compiled quality control summary, and calibration data upon client request for data packages. Assist the Quality Assurance Program Manager with standard operating procedures, control charting, and audit preparation.

Database Analyst, *Cure Autism Now (Autism Genetic Resource Exchange), Los Angeles, California,* 2002-2003. Performed analysis of test date through data audits and queries, maintained extensive database, and coordinated data audits between Northern and Southern California locations. Additional duties included assisting in the creation of new databases, as needed, creation of SOP for phenotypic and genotypic data collecting, and process improvements for subject flow through the research project.

Scientist II, Data Validation Coordinator, *Columbia Analytical Services, Inc., DBA Performance Analytical, Inc., Simi Valley, California,* 2000-2002. Responsibilities included validation of all analytical results produced by the laboratory. Verification of client analyses, sample information, and reporting format. Compiled quality control summary, and calibration data upon client request for data packages. Assisted the Quality Assurance Program Manager with standard operating procedures, control charting, and audit preparation.

Administrative Assistant/Data Analyst, *Specialty Laboratories, Santa Monica, California,* 1999-2000. Performed retrieval, quality control, and organization of data. Compiled data for reporting of HIV, lead, urinalysis, kidney stones, and communicable diseases. Also communicated with the state DOH and clients regarding reporting requirements and demographic information.

Administrative Assistant, *Horvitz & Levy LLP, Encino, California,* 1991-1999. Report new cases to attorneys, check clients through conflict database, QC party information, maintain attorney calendars, and perform orientations of new attorneys.

Education

BA, Biology, *California State University at Northridge, Northridge, California,* 1998.

UNCONTROLLED COPY

REGAN LAU

2001 TO PRESENT

Columbia Analytical Services INC.
An Employee - Owned Company

Columbia Analytical Services, Inc., 2665 Park Center Drive, Suite D, Simi Valley, CA 93065 (805) 526-7161

Current Position	**CHEMIST** – 2001 to Present
Responsibilities	Analysis of vapor phase and liquid samples for various volatile compounds, perform maintenance on instruments when required, real time data reduction, participate in peer review process, maintain working knowledge of all GC methods performed in laboratory, and good practice of all QA/QC requirements. **Documentation of Demonstration of Capabilities is available for review.**
Experience	**QC Analyst,** *Cancer Vax, Santa Monica, California*, 2001. Responsibilities included screening of material and manufactured products using cGMP and SOPs. **Research Associate I,** *Cedars-Sinai Medical Center, Los Angeles, California*, 1997-2000. Responsibilities included research on immunological function of mice with tumor. **Lab Assistant I,** *University of California at Los Angeles, Los Angeles, California*, 1997. Responsibilities included constructed DNA vector for possible use in gene therapy for cancer.
Education	**BS, Microbiology,** *University of California at Los Angeles, Los Angeles, California,* 1997.

UNCONTROLLED COPY

K. LYNNE NELSON

2000 TO PRESENT

Columbia Analytical Services INC.
An Employee - Owned Company

Columbia Analytical Services, Inc., 2665 Park Center Dr., Suite D, Simi Valley, CA 93065 (805) 526-7161

Current Position

QUALITY ASSURANCE PROGRAM MANAGER – 2000 to Present

Responsibilities

Responsibilities include facilitate ethics and QA training, maintain all training documentation, perform QA orientation for new employees, review data (both hardcopy and electronic), perform internal QA audits and prepare written reports, review, approve, and control Standard Operating Procedures, maintain QA Manual, maintain QA records (including archived logbooks, archived certificates of analysis, nonconformity and corrective action reports, MDL studies results, SOP revision and distribution, statistical control limits, PE sample results), serve as document control officer, and PC for all PE sample analyses, prepare corrective action report for any unacceptable PE sample results, maintain laboratory's certifications and approvals, facilitator for external QA audits and prepare written response to deficiencies, prepare activity report to management.

Experience

Manager, Laboratory Quality Systems, *WorldwideTesting.com, Atlanta, Georgia,* 1999-2000. Responsibilities included determining laboratory qualifications, conducting laboratory audits and issuing reports, writing Standard Operating Procedures, building databases for online ordering system, interfaced with laboratories and clients to determine specific requirements.

Technical Account Representative, *SGS US Testing Company, Los Angeles, California,* 1995-1999. Responsibilities included internal auditing, coordinating test programs, developing test programs for clients based on requirements, attended trade shows and technical meetings, initiated new sales through written and verbal communications.

Analytical Chemist, *BOC Gases, Research Triangle Park, North Carolina*, 1993-1995. Responsibilities included analyzing gases for impurities, headed corrective action teams dedicated to various aspects of the quality system, supervised and trained new employees, responsible for implementing and maintaining control charts.

Environmental Chemist, *Oak Ridge Research Institute, Oak Ridge, Tennessee,* 1991-1993. Responsibilities included organic extractions, analysis of waste for PCBs and radionuclides, worked independently on second shift performing routine and rush analyses.

Education

BS, Professional Biology, *University of North Alabama, Florence, Alabama,* 1991.
BS, Chemistry, *University of North Alabama, Florence, Alabama,* 1991.

Publications/ Presentations

The Value of Independent Laboratories, PCI Magazine, September 1997.

Affiliations

American Society for Quality (ASQ)
American Society for Testing and Materials (ASTM)
AOAC International

UNCONTROLLED COPY

CHRISTOPHER J. PARNELL

1991 TO PRESENT

Columbia Analytical Services INC.
An Employee - Owned Company

Columbia Analytical Services, Inc., 2665 Park Center Drive, Suite D, Simi Valley, CA 93065 (805) 526-7161

Current Position

CHEMIST, VOLATILE GAS CHROMATOGRAPHY / MASS SPECTROMETRY TEAM LEADER – 2002 to Present

Responsibilities

Team leader for the Volatile Gas Chromatography Mass Spectrometry group responsibilities are but are not limited to training of chemists, peer review of analytical data, mentoring of junior analysts, standard operating procedure review and streamlining of methods. Duties also require performance reviews and development of his direct reports.

Documentation of Demonstration of Capabilities is available for review.

Experience

Scientist VI, *Columbia Analytical Services, Inc., DBA Performance Analytical, Inc., Los Angeles, California,* 1994-2002. Responsibilities include analyzing indoor air, ambient air and source emission samples by GC/MS methods, standards preparation, perform maintenance on instruments when required, real time data reduction, participation in peer review process, and good practice of all QA/QC requirements.

Scientist VI, *Performance Analytical, Inc, Canoga Park, California,* 1991-1994. Responsibilities listed above.

Air Toxics Laboratory Supervisor, *ABB Environmental Inc., Camarillo, California,* 1990-1991. Responsibilities included scheduling client analyses and developing methods for non-routine analyses, and operating the Air Toxics laboratory.

Analytical Chemist, *C-E Environmental Inc., EMSI, Camarillo, California,* 1987-1990. Responsibilities included overseeing the Pesticide/PCB analysis of samples under the EPA Contract Laboratory Program, and interfacing with the EPA and regional offices to respond to inquiries and performing GC analyses and extractions.

Chemist, *Damon Reference Laboratory, Newbury Park, California,* 1986-1987. Responsibilities included performing Enzyme-linked immunosorbent assays, Western-Blot assays, and Protein Electrophoresis.

Education

BS, Chemistry, *University of California at Santa Barbara, Santa Barbara, California,* 1986.

UNCONTROLLED COPY

MICHELLE H. SAKAMOTO

2000 TO PRESENT

Columbia Analytical Services INC.
An Employee - Owned Company

Columbia Analytical Services, Inc., 2665 Park Center Drive, Suite D, Simi Valley, CA 93065 (805) 526-7161

Current Position

DATA VALIDATION COORDINATOR – 2005 to Present

Responsibilities

Responsibilities included validation of analytical results produced by the laboratory. Verification of client analytical requests, sample information, and reporting formats. Interacts with project managers and Quality Assurance Program Manager to ensure that all reports fulfill client requirements as well as QA/QC needs. Compiled quality control summary, and calibration data upon client request for data packages.

Experience

Analytical Chemist, *Columbia Analytical Services, Inc., Simi Valley, CA,* 2002-2005. Analyzing indoor air, ambient air and source emission samples by GC/MS methods, standard preparation, perform maintenance on instruments when required, real time data reduction, participate in peer review process, and good practice of all QA/QC requirements.

Data Validation Coordinator, *Columbia Analytical Services, Inc. DBA Performance Analytical, Inc. Los Angeles, California,* 2002. Responsibilities included validation of all analytical results produced by the laboratory. Verification of client analytical request, sample information, and reporting formats. Compiled quality control summary and calibration data upon client request for data packages.

Analytical Chemist, *Columbia Analytical Services, Inc. DBA Performance Analytical, Inc. Los Angeles, California,* 2000-2002. Responsibilities included analysis of vapor phase and liquid samples for various volatile compounds, perform maintenance on instruments when required, real time data reduction, participate in peer review process, maintain working knowledge of all GC methods performed in laboratory, and good practice of all QA/QC requirements

Technical Support Specialist, *Quidel Corporation, San Diego, California,* 2000. Provided technical support of diagnostic products to medical professionals, sales representative, and laypersons via the telephone. Additional duties included documentation of complaints and follow up with customers.

Office Manager/Receptionist, *Manex Visual Effects, Culver City, California,* 1999-2000. Responsible for operation of the switchboard, greeting clients, purchase order requests, and timecard data entry.

Laboratory Technician, *Prince William County Service Authority, Woodbridge, Virginia,* 1996-1999. Responsible for qualitative and quantitative analyses of wastewater and drinking water samples. Also responsible for reagent and media preparation, calibration and general maintenance of laboratory instruments, and documentation and data entry of results.

Associate Process Group Chemist II, *Quidel Corporation, San Diego, California,* 1994-1995. Separated, purified, and conjugated proteins; performed product release analysis; assay performance; and buffer and reagent formulation.

Education

BA, Biology, *Point Loma Nazarene University, San Diego, California,* 1992

UNCONTROLLED COPY

MICHAEL TUDAY

1988 TO PRESENT

Columbia Analytical Services INC.
An Employee - Owned Company

Columbia Analytical Services, Inc., 2665 Park Center Drive, Suite D, Simi Valley, CA 93065 (805) 526-7161

Current Position

DIRECTOR OF RESEARCH AND DEVELOPMENT – 2002 to Present

Responsibilities

Responsibilities include identifying new markets, determining laboratory feasibility, providing guidance in business development, marketing, and overseeing method development. Review of contract proposals, pricing and intuitive review of analytical data prior to it being released to the client. Also involved in writing and implementing training sessions and acts as a project manager when necessary.

Experience

Laboratory Director, *Columbia Analytical Services, Inc., DBA Performance Analytical, Inc., Los Angeles, California,* 1994-2002. Responsibilities include managing technical operations, employee development and business operations (financial and marketing). Overseeing the Quality Assurance activities and reviewing analytical data for final report approval. Advising clients of appropriate sampling and analytical protocols related to air testing data interpretation. Participating in the development and validation of new sampling and analysis protocols. Serving as an expert witness in legal cases requiring testimony. Lecturing for educational courses and association meetings.

Laboratory Director/Owner, *Performance Analytical, Inc, Canoga Park, California,* 1988-1994. Duties primarily as listed above.

Laboratory Technical Manager, *C-E Environmental Inc., EMSI, Camarillo, California*, 1984-1988. Responsibilities included Program management of EPA Contract Laboratory Program and Special Analytical Services Contracts. Project Management for several large multidisciplinary projects, including the Love Canal Habitability Study. Initiated the development of the Air Toxics Analysis Laboratory. Served as Technical Marketing Coordinator for Laboratory Services (cost proposals and technical plans). Previously responsible for the supervision of the Gas Chromatography/Mass Spectrometry Laboratory.

GC/MS Laboratory Supervisor, *International Technology Corporation, Cerritos, California*, 1981-1984. Responsibilities included: Supervision of ten chemists in a large commercial laboratory. Projects included EPA Contract Laboratory Program analyses, EPA EMSL-Cinn drinking water method development and analysis contracts, Battelle and Radian interlaboratory method validation studies, hazardous waste characterization, analytical support for Remedial Investigations/Feasibility Studies, groundwater and wastewater effluent monitoring, commercial product deformulation and industrial hygiene analysis.

Chemist, Chromatography Laboratory, *O'Brien & Gere Engineers, Inc., Syracuse, New York*, 1980-1981. Responsibilities included: Performance of trace organics analysis of environmental samples for pesticides/PCBs, chlorophenoxyacid herbicides, and volatile organic compounds by gas chromatography.

Education

BS, Chemistry, *State University of New York, Oswego, New York,* 1980.
SHORT COURCES IN: Chemical Ionization GC/MS, INCOS Operation, and MS Interpretation, *Finnigan Institute, Cincinnati, Ohio.*

Affiliations

Air & Waste Management Association
Southern California Environmental Chemists Society
American Industrial Hygiene Association

UNCONTROLLED COPY

ZHENG WANG

2004 TO PRESENT

Columbia Analytical Services INC.
An Employee - Owned Company

Columbia Analytical Services, Inc., 2665 Park Center Drive, Suite D, Simi Valley, CA 93065 (805) 526-7161

Current Position

CHEMIST– 2004 to Present

Responsibilities

Analysis of vapor phase and liquid samples for various volatile compounds, perform maintenance on instruments when required, real time data reduction, participate in peer review process, maintain working knowledge of all GC methods performed in laboratory, and good practice of all QA/QC requirements.

Documentation of Demonstration of Capabilities is available for review.

Experience

Chemist, *Atmospheric Analysis and Consulting, Inc., Ventura, CA,* 2003. Responsible for the analytical method development and validation of testing raw materials, environmental pollutants and the documentation of quality control standards and analytical results. Overview all laboratory equipment. Perform and revise testing methodologies when necessary. Apply EPA, ASTM, SCAQMD, and SW 846 methods to analyze volatile organic compounds.

Senior Research Associate, *China National Petroleum Corporation, Renqiu, Hebei, China,* 1988-2000. Developed and validated analytical methods for the analysis of geological samples and conducted organic geochemistry evaluation using HPLC, GC/MS, UV, IR, fluorescent detection and column chromatography. Performed separation and quantitative analysis of crude oil and bitumen A, including saturate and aromatic compounds, non-hydrocarbon and asphaltenes by using HPLC and column chromatography. Evaluated and calculated organic matter abundance. Performed analysis of the saturate (C8-C35), headspace gas (c1-C5), and aromatic by using GC and GC/MS. Parameters of evaluating geochemistry were calculated from GC spectrum. Performed identification and analysis of biomarkers in saturate compounds by GC/MS. Parameters of gas and oil migration were calculated from mass spectrum. Documented and wrote analytical protocols and reports. Maintained the analytical instruments include GC, GC/MS, HPLC, UV, IR, etc. Managed the development and growth of technicians.

Education

MS, Organic Chemistry, *New Mexico Highland University, Las Vegas, New Mexico,* 2002.

BS, Analytical Chemistry, *Ningxia University, Yinchuan, Ningxia, China.* 1988

Affiliations

American Chemical Society; Chinese Petroleum Society

UNCONTROLLED COPY

JOHN YOKOYAMA

1997 TO PRESENT

Columbia Analytical Services INC.
An Employee - Owned Company

Columbia Analytical Services, Inc., 2665 Park Center Dr., Suite D, Simi Valley, CA 93065 (805) 526-7161

Current Position

LABORATORY OPERATIONS MANAGER – 2002 to Present

Responsibilities

Responsibilities include managing technical operations, employee development and business operations (financial and marketing). Additionally responsible for ensuring that quality control functions are carried out as planned and to guarantee the production of high quality data. The Laboratory Operations Manager is also required to coordinate laboratory work shifts, perform work reviews, schedule programs such as method detection limit studies and training, review corrective action reports, and coordinate sample analysis scheduling with respect to holding times and client requirements. Additionally works with the Project Managers on scheduling conflicting client projects and the Quality Assurance Program Manager on certain quality issues as they directly relate to the laboratory.

Experience

Scientist VI, *Columbia Analytical Services, Inc., DBA Performance Analytical, Inc., Los Angeles, California,* 1997-2002. Responsibilities include, but is not limited to, sample analysis of various constituents using GC, GCMS, and HPLC methodologies. Sample and standard preparation for air and traditional analyses, method development, training of personnel, semi-volatile performance evaluation samples, instrument maintenance, regulating and maximizing sample flow through the semi-volatile area, ordering of a large majority of lab supplies, and when necessary acting as a Project Chemist/Client Services.

GC/MS Supervisor, *West Coast Analytical Service, Santa Fe Springs, California,* 1996-1997. Oversight of GC/MS workflow. Maintenance of GC/MS instruments and some method development. Duties also included review of analytes, reports, and analysis of semi-volatile GC/MS samples.

Organics Manager, *PACE Incorporated, Camarillo, California,* 1994-1996. Oversaw organics group's workload with each group's supervisor. Involved with budget decisions, including instrument purchase and personnel. Also reviewed reports and analyzed volatile GC/MS samples as necessary.

GC/MS Supervisor, *Thermal Analytical, Monrovia, California,* 1992-1994. In charge of GC/MS groups, responsibly which included review of reports, personnel, method development, routine instrument maintenance, and analysis of semi-volatile samples.

GC/MS Chemist, *IT Corporation, Cerritos, California,* 1986-1992. Analysis of volatile and semi-volatile samples of various matrices. Developed methods, reviewed some reports and performed routine maintenance on instruments.

Education

BS, Biological Sciences/Marine Toxicology, *University of California at Los Angeles, Los Angeles, California,* 1982.

UNCONTROLLED COPY

MANUAL "MANNY" ZAMORA

2005 TO PRESENT

Columbia Analytical Services INC.
An Employee - Owned Company

Columbia Analytical Services, Inc., 2665 Park Center Drive, Suite D, Simi Valley, CA 93065 (805) 526-7161

Current Position

SAMPLE MANAGEMENT SUPERVISOR – 2005 to Present

Responsibilities

Responsible for the operation of the Sample Management Department including performing sample receiving, acceptance, and log-in procedures. Responsible for evaluating sample receipt compliance against the appropriate method requirements and recording any deviations. Generates and distributes documentation of all sample received by the laboratory. The SMO Supervisor also maintains calibration and log of thermometers, as well as recording temperatures of all refrigerators and freezers.

Experience

Sample Management Technician – *Columbia Analytical Services, Inc. (Canoga Park Laboratory), 2002-2005.* Responsible for the receipt of groundwater and soil samples into the lab. Maintained proper documentation of sample receipt by following chain-of-custody (COC) procedures. Checked the number of samples received against the COC to account for all the samples. Logged samples into the laboratory; labeled samples; checked pH of preserved samples; and input tests required for each sample into the computerized Laboratory Information Management System (LIMS). Performed courier services (e.g., transported samples or bottle orders between clients and laboratory), field services (e.g., taking field samples for the clients), and bottle order preparation (e.g., adding preservation into bottles and containers for delivery to clients for sampling).

Facilities Assistant – Mailroom, *Xirom, Inc., a division or INTEL, Thousand Oaks, California,* 1998-2002. Responsible for pickup, sorting, and delivery of company mail from the Post Office; administration of computerized shipping system for corporate shipping; assist with daily maintenance of company buildings; stock/purchase office supplies and snacks/drinks for the Company snack machines.

Stockroom Administrator, *American Network Systems, Simi Valley, California,* 1997-1998. Responsible for operation of the warehouse, including receipt/inspection of incoming materials and shipment of product worldwide. Administrative duties included production of export documents required for international shipments; creation of work orders, transfers, new order entry, and monthly inventory report transactions.

Material Handler II - Shipping, *Xirom, Inc., a division or INTEL, Thousand Oaks, California,* 1994-1997. Responsible for daily inventory reports and daily RMA and Sales Order logs. Responsible for all internal material transfers, including freight calculation.

Receiving Clerk, *Hewlett Packard, Eesof Inc., Westlake Village, California,* 1992-1994. Responsible for receipt documentation, and distribution of all deliveries. Coordinated inspection of fabricated materials with Quality Assurance.

Education

COURSEWORK, Business Administration, *Moorpark Community College, Moorpark, California,* 1982-1985.

UNCONTROLLED COPY

APPENDIX B

MAJOR EQUIPMENT

UNCONTROLLED COPY

LILIANA MARGHITOIU

2005 TO PRESENT

Columbia Analytical Services, Inc., 2665 Park Center Drive, Suite D, Simi Valley, CA 93065 (805) 526-7161

Current Position

CHEMIST – 2005 to Present

Responsibilities

Analyzing indoor air, ambient air and source emission samples by GC/MS methods, standard preparation, perform maintenance on instruments when required, real time data reduction, participate in peer review process, and good practice of all QA/QC requirements.

Documentation of Demonstration of Capabilities is available for review.

Experience

Analytical Chemist, *Capco Analytical Services, Ventura, California,* 2004-2005. Responsible for qualitative and quantitative analyses of wastewater, drinking water, soil, and gas samples. Additionally, responsibilities included analysis of vapor phase, liquid and soil samples for various volatile compounds through GC and GC/MS (for 8020, 8015 EPA methods, sulfur and natural gas analysis). Performed analytical tests for water and soil using IC-Dionex (anions and per chlorate) and method development and implementation for IC and GC methods. Wrote and updated SOP's and participated in internal and external audit, review and validation of QC forms and books. Conducted training of other employees and reported and validated results. Performed maintenance on instruments and ordered supplies.

Loan and Insurance processor, *Countrywide, Simi Valley, California,* 2003-2004. Data entry, loan and insurance review and update.

Laboratory Assistant, *Esoterix Endocrinology, Calabasas, California,* 2002-2003. Responsible for reagent and media preparation, calibration and general maintenance of laboratory instruments, and documentation.

Chemistry and Physics Teacher, *High School, Timisoara, Romania,* 1997-1999. Teach Chemistry and Physics. Prepared students for High School final exam and University admission.

Education

MS, Biotechnology- ***Channel Island University, Camarillo, California, present***

Molecular Biology and Genetics classless – ***Channel Island University, Camarillo, California, spring 2005***

English Classes- ***Moorpark College, Moorpark, California, English Classes 2002-2003***

1997-1999 ***Veterinary Medicine and Agricultural Science University of Banatul, Timisoara, Romania-I was working to received a BS In Food Chemistry Engineering- left Romania one year before graduation.***

BS, Chemistry and Physics, *West University, Timisoara, Romania, 1997*

UNCONTROLLED COPY

SEMI-VOLATILES LABORATORY

Gas Chromatographs (5)

- HP Model 5890, equipped with one split/splitless capillary column injector and one universal injector, electronic flow sensing and sub-ambient options (1)
- HP Model 5890 Series II, equipped with one split/splitless capillary column injector and one universal injector, electronic flow sensing and sub-ambient options (1)
- HP Model 5890 Series II, equipped with one split/splitless capillary column injector and one universal injector, electronic flow sensing and sub-ambient options (1)
- HP Model 6890, equipped with one split/splitless capillary column injector and one universal injector, electronic flow sensing and sub-ambient options (1)
- Agilent Model 6890N, equipped with one split/splitless capillary column injector and one universal injector, electronic flow sensing and sub-ambient options (1)

Detectors

- Flame ionization detector (FID), HP Model (3)
- Electron capture detector (ECD), HP Model G1533A (2), Model G1233A (1) (3)
- Nitrogen phosphorus detector (NPD), HP Model (1)
- HP Model 5971A quadrupole mass selective detector; 98,000-compound NIST mass spectral library
- HP Model 5970 quadrupole mass selective detector; 98,000-compound NIST mass spectral library

High Performance Liquid Chromatograph

- Waters LC Module 1 Plus quaternary gradient system equipped with a UV/VIS detector and an autosampler

Autoinjectors

- HP 7673 robot arm autoinjector (2)
- HP 6890 robot arm autoinjector (1)
- Agilent 7683B robot arm autoinjector (1)

Chromatography Workstations

- HP Chemstation data system with Enviroquant and Environforms software (5)

Wrist action shaker

- Burrell Model 75 (8-position)

Analytical balance

- American Scientific model S/P 180*

Top loading balance

- Acculab Model V-350*

*All equipment maintained by laboratory with the exception of these items, which are maintained by an approved outside service vendor.

UNCONTROLLED COPY

VOLATILES LABORATORY – GC/MS

Gas Chromatograph/Mass Spectrometer/Data Systems

- HP Model 5973 quadrupole mass selective detector equipped with an HP 6890 gas chromatograph, Enviroquant Chemstation data system, and a 98,000-compound NIST spectral library (1)
- Agilent Model 5973N quadrupole mass selective detector equipped with an Agilent 6890 Plus gas chromatograph, Enviroquant Chemstation data system, and a 98,000-compound NIST spectral library (1)
- Agilent Model 5973N quadrupole mass selective detector equipped with an Agilent 6890A gas chromatograph, Enviroquant Chemstation data system, and a 98,000-compound NIST spectral library (1)
- Agilent Model 5973*inert* quadrupole mass selective detector equipped with an Agilent 6890N gas chromatograph, Enviroquant Chemstation data system, and a 98,000-compound NIST spectral library (1)
- HP Model 5972 quadrupole mass selective detector equipped with an HP 5890 Series II Plus gas chromatograph, Enviroquant Chemstation data system, and a 98,000-compound NIST spectral library (1)
- HP Model 5970 quadrupole mass selective detector equipped with an HP 5890 Series II gas chromatograph, Enviroquant Chemstation data system and a 98,000-compound NIST spectral library (1)
- HP Model 5890A GC with an FID and Enviroquant software for screening source level samples (1)
- Varian Model 3400 equipped with an FID, for screening source level samples (2)

Purge and trap concentrators / autosamplers

- Tekmar Model LSC-2000 purge and trap concentrator
- Tekmar Model 2016, 16-Position autosampler equipped with soils heater
- Tekmar Model 2032 16-Position autosampler equipped with soils heater

Automated whole air inlet system

- Tekmar AutoCan automated concentrator. PC-controlled inlet system is capable of analyzing up to sixteen passivated stainless steel canisters or Tedlar bags with unattended operation. Concentrator unit is equipped with a cryofocusing module and solid sorbent trapping module (5)

Thermal desorber / cryogenic concentrators

- Perkin-Elmer TurboMatrix ATD-50 automatic thermal desorber

*All equipment maintained by laboratory.

UNCONTROLLED COPY

VOLATILES LABORATORY – GC

Gas Chromatographs (11)

- HP Model 5890A, equipped with one split/splitless capillary column injector and one universal injector, electronic flow sensing and sub-ambient options (2)
- HP Model 5890 Series II, equipped with one split/splitless capillary column injector and one universal injector, electronic flow sensing and sub-ambient options (5)
- HP Model 6890, equipped with one split/splitless capillary column injector and one universal injector, electronic flow sensing and sub-ambient options (2)
- Agilent Model 6890N, equipped with one split/splitless capillary column injector and one universal injector, electronic flow sensing and sub-ambient options (2)

Detectors

- Flame ionization detector (FID), HP and Agilent Models (7)
- Thermal conductivity detector (TCD), HP and Agilent Models (2)
- Photoionization detector (PID), OI Analytical Model 4430 (3)
- Nitrogen phosphorus detector (NPD), HP and Agilent Models (3)
- Pulsed flame photometric detector (PFPD), OI Analytical Model 5380 (1)
- Electrolytic conductivity detector, OI Model 4420 (1)
- Flame photometric detector (FPD), HP Model 19256A (1)
- Sulfur chemiluminescence detector (SCD)
  Sievers Model 355 with flameless interface (2)
- Pulsed discharge helium ionization detector (PDD), Valco Instruments

Purge and Trap Concentrators

- Tekmar Model LSC-2000 purge and trap concentrator
- Tekmar Model 2016 16-position autosampler equipped with soils heater

Tekmar Model 5010 automatic Desorber

- Fixed gas analyzer/total combustion analyzer (TCA)

Autoinjector

- Agilent 7683B robot arm autoinjector

Chromatography workstations

- HP Chemstation data system with Enviroquant and Environforms software (22)

Thermal conditioners

- Tekmar Model 5100 thermal conditioner (2)

High performance sampling pump / mass flow meter

- Desaga Model GS312 gas sampler with automatic temperature correction

*All equipment maintained by laboratory.

UNCONTROLLED COPY

SAMPLE MANAGEMENT AND DISPOSAL

Air sampling containers / flow controllers

- Six-liter Summa passivated stainless steel canisters (1650)
- Six-liter Silco passivated stainless steel canisters (15)
- Three-liter Silco passivated stainless steel canisters (70)
- Meriter 2.4-liter passivated stainless steel canisters (35)
- One-liter Summa passivated stainless steel canisters (60)
- 400-millilter mini passivated stainless steel canisters (21)
- Low volume flow controllers for time integrated sampling (500)
- Mini-canister flow controllers for time integrated sampling (12)

Automated Summa canister conditioning units

- Ten-position, microprocessor controlled conditioners with heater controller, vacuum gauge, humidified zero air fill capability and large capacity vacuum pump (2)
- Fourteen-position, microprocessor controlled conditioners with heater controller, vacuum gauge, humidified zero air fill capability and large capacity vacuum pump (1)

*All equipment maintained by laboratory

INFORMATION TECHNOLOGY

Network Server

- Dell PowerEdge 1750 with MicroSoft Windows Server 2003

Uninterruptible Power Supply

- APC Smart UPS Model SU2200NET uninterruptible power supply dedicated to the network and mail servers

UNCONTROLLED COPY

CAS/AQL SATELLITE EXTRACTION LABORATORY
• Fume Hoods, six-foot (2)
Extraction Glassware • Soxhlet Extractors - 1500 ml capacity with condensers (2) • Soxhlet Extractors - 500 ml capacity with condensers (12) • Roundbottom Flasks - 3000 ml capacity (1), with heating mantles (2) • Roundbottom Flasks - 1000 ml capacity (250, with heating mantles (12) • Separatory Funnels - 2000 ml capacity (7) • Kuderna Danish flasks with receivers (12) • Macro Snyder columns (12) • Micro Snyder columns (2)
Sample Concentrators (3) • Zymark TurboVap II Concentrator (2) • Organomation N-Evap Concentrator (1)
Water Bath • Boekel 8-Ring Concentric Bath
Deionized Water System • Polymetrics, Inc. with 1 Megaohm indicator
Electric Kiln • Cress Model ET28 [MM]
Analytical Balance • American Scientific Model HM-202

*All equipment maintained by laboratory

UNCONTROLLED COPY

APPENDIX C

TEST METHODS AND STANDARD OPERATING PROCEDURES

UNCONTROLLED COPY

Method Reference[1]
EPA Compendium Method TO-3, "Method for the Determination of Volatile Organic Compounds in Ambient Air Using Preconcentration Techniques and Gas Chromatography with Flame Ionization and Electron Capture Detection."
EPA Compendium Method TO-4A, "Determination of Pesticides and Polychlorinated Biphenyls in Ambient Air Using High Volume Polyurethane Foam (PUF) Sampling Followed by Gas Chromatographic/Multi-Detector Detection (GC/MD)."
EPA Compendium Method TO-5, "Method for the Determination of Aldehydes and Ketones in Ambient Air Using High Performance Liquid Chromatography (HPLC)."
EPA Compendium Method TO-8, "Method for the Determination of Phenol and Methylphenols (Cresols) in Ambient Air Using High Performance Liquid Chromatography (HPLC)."
EPA Compendium Method TO-10A, "Determination of Pesticides and Polychlorinated Biphenyls in Ambient Air Using Low Volume Polyurethane Foam (PUF) Sampling Followed by Gas Chromatographic/Multi-Detector Detection (GC/MD)."
EPA Compendium Method TO-11A, "Determination of Formaldehyde in Ambient Air Using Adsorbent Cartridge Followed by High Performance Liquid Chromatography (HPLC) [Active Sampling Methodology]."
EPA Compendium Method TO-13A, "Determination of Polycyclic Aromatic Hydrocarbons (PAHs) in Ambient Air Using Gas Chromatography/Mass Spectrometry (GC/MS)."
EPA Method 3C, "Determination of Carbon Dioxide, Methane, Nitrogen, and Oxygen from Stationary Sources."
EPA Compendium Method TO-14A, "Determination of Volatile Organic Compounds (VOCs) in Ambient Air Using Specially Prepared Canisters with Subsequent Analysis by Gas Chromatography." EPA Compendium Method TO-15, "Determination of Volatile Organic Compounds (VOCs) in Air Collected in Specially-Prepared Canisters and Analyzed by Gas Chromatography/Mass Spectrometry (GC/MS)."
EPA Method 25C, "Determination of Nonmethane Organic Compounds (NMOC) in Landfill Gases."
SW-846 Method 8260B, "Volatile Organic Compounds by Gas Chromatography/Mass Spectrometry (GC/MS)."
SW-846 Method 8270C, "Semivolatile Organic Compounds by Gas Chromatography/Mass Spectrometry (GC/MS)."
SW-846 Method 8315A, "Determination of Carbonyl Compounds by High Performance Liquid Chromatography (HPLC)."
OSHA 07, "Organic Vapors."
NCASI Method DI/MEOH-94.03, "Methanol in Process Liquids by GC-FID."
NCASI Method DI/HAPS-99.01, "Selected HAPS in Condensates by GC/FID."
NCASI Method IM/CAN/WP-99.02, "Impinger/Canister Source Sampling Method for Selected HAPS and Other Compounds at Wood Products Facilities."
NIOSH 1005, "Methylene Chloride."
NIOSH 1300, "Ketones I."
NIOSH 1301, "Ketones II."
NIOSH 1400, "Alcohols I."
NIOSH 1401, "Alcohols II."
NIOSH 1402, "Alcohols III."

UNCONTROLLED COPY

Method Reference – Continued
NIOSH 1403, "Alcohols IV."
NIOSH 1500, "Hydrocarbons, 36-126C BP."
NIOSH 1450, "Esters I".
NIOSH 1457, "Ethyl Acetate".
NIOSH 1501, "Aromatic Hydrocarbons."
NIOSH 1550, "Hydrocarbons."
NIOSH 2000, "Methanol."
NIOSH 2538, "Acetaldehyde by GC."
NIOSH 2549, "Volatile Organic Compounds (Screening)."
NIOSH 5515, "Polynuclear Aromatic Hydrocarbons by GC."
ASTM D 1946, "Standard Practice for Analysis of Reformed Gas by Gas Chromatography."
ASTM D 3588, "Standard Practice for Calculating Heat Value, Compressibility Factor, and Relative Density of Gaseous Fuels."
ASTM D 5075, "Nicotine and 3-Ethenylpyridine in Indoor Air."
ASTM D 5504, "Standard Test Method for Determination of Sulfur Compounds in Natural Gas and Gaseous Fuels by Gas Chromatography and Chemiluminescence." SCAQMD Method 307, "Determination of Sulfur in a Gaseous Matrix."
CARB Method 410A, "Determination of Benzene from Stationary Sources at Low Concentrations."
CARB Method 410B, "Determination of Benzene from Stationary Sources at High Concentrations."
CARB Method 422, "Determination of Volatile Organic Compounds in Emissions from Stationary Sources."
Massachusetts Department of Environmental Protection (MADEP), "Method for the Determination of Air-Phase Petroleum Hydrocarbons (APH)", Public Comment Draft 1.0
EPA Compendium Method TO-17, "Determination of Volatile Organic Compounds in Ambient Air Using Active Sampling Onto Sorbent Tubes."
EPA Method 8100, "Polynuclear Aromatic Hydrocarbons".

Note 1: The list of referenced methods consists of both routine and non-routine performed methods. In addition, a number of the methods are performed with modification and are reported accordingly. Additionally, other methods may be performed, referenced and reported as long as the minimum requirements of the method and the Quality Assurance Manual are followed.

In-House Methods
"Dissolved Gas Analysis in Aqueous Samples Using a GC Headspace Equilibration Technique."
"Determination of Volatile Amines in Ambient Air."
"Determination of Carboxylic Acids in Air."
"Analysis of Sulfur Compounds in Liquid Samples by Gas Chromatography with Sulfur Chemiluminescence Detection."

UNCONTROLLED COPY

LABORATORY STANDARD OPERATING PROCEDURES & MANUALS	
SOP CODE	**TITLE**
ADM-AUDIT	Conducting Internal Laboratory Audits
ADM-BAL_CAL	Calibration And Use Of Analytical Balances
ADM-BATCH	Sample Batches
ADM-CAL_VAC	Evaluation Of Pressure/Vacuum Gauges
ADM-CMPLT	Dealing With Complaints
ADM-COC	Chain Of Custody For Sample Transfer Between Laboratories
ADM-CONFIRM	Confirmation Of Organic Analytes Id And Quantitation
ADM-CTMN	Checking New Lots Of Chemical For Contamination
ADM-CTRL_LIM	Control Limits
ADM-DATA_INT	Ensuring Data Integrity
ADM-DATA_REV	Data Review
ADM-DATANTRY	Making Entries Into Logbooks And Onto Benchsheets
ADM-DOC_CTRL	Document Control
ADM-E_DATA	Preparation Of Electronic Data For Organic Analyses For Electronic-Data Auditing
ADM-E_DATAUDIT	Electronic-Data Auditing
ADM-HKEEP	Handling Consumable Materials And Laboratory Environment Maintenance (Housekeeping)
ADM-INT	Manual Integration Of Chromatographic Peaks
ADM-MDL	Determination Of Method Detection Limits And Limits Of Detection
ADM-Media_Req	Analysis Scheduling And Requests For Sample Media
ADM-MGMTRVW	Managerial Review Of The Laboratory's Quality System
ADM-NCAR	Nonconformity And Corrective Action Documentation
ADM-PIP_CAL	Evaluating The Calibration Of Repeating Pipettors
ADM-PMgmt	Project Management And Business Development
ADM-PTS	Proficiency Testing Sample Analysis
ADM-PUR	Purchasing Through CAS Purchasing Agent In Kelso
ADM-RESTORE	Restoring Data
ADM-SftwreQA	Software And Data Quality Assurance
ADM-SIGFIG	Significant Figures
ADM-Smple_SAT	Laboratory Sample Storage, Analysis And Tracking
ADM-SOP	Preparation Of Standard Operating Procedures
ADM-STDRPT	Receipt, Preparation And Tracking Of Standards, Reagents And Media
ADM-SUBLAB	Qualification Of Subcontract Laboratories Outside Of CAS Network

UNCONTROLLED COPY

LABORATORY STANDARD OPERATING PROCEDURES & MANUALS	
SOP CODE	**TITLE**
ADM-TRANDOC	Documentation Of Technical Personnel Training
ADM-UNCERT	Estimation Of Uncertainty Of Measurements
DSP-Sample	Waste Disposal
GEN-GLAS	Glassware Cleaning
LIM-DATA_TAPES	Tape Back-Up And Archiving
NA	Software Quality Assurance Plan
SMO_CanCert	Cleaning And Certification Of Summa Canisters & Other Specially Prepared Canisters
SMO-Can-Press	Evaluation And Pressurization Of Specially Prepared Stainless Steel Canisters
SMO-Flow_Cntrl	Flow Controllers And Critical Orifices
SMO-SMPL_REC	Sample Receiving, Acceptance And Log-In
GCP-TO4A	Sample Extraction and Preparation of Pesticide and PCB Samples According to EPA Compendium Methods TO-4A and TO-10A
MSP-13A	Sample and Media Preparation per EPA Compendium Method TO-13A
SVG-8100	Determination of PAHs by GC/FID in Accordance with EPA Method 8100
SVG-Amines	Determination of Volatile Amines in Ambient Air Using GC/NPD
SVG-TO4A	Determination of Pesticides and Polychlorinated Biphenyls (PCBs) in Ambient Air by GC/ECD per EPA Compendium Methods TO-4 and TO-10A
SVM-11A	Determination of Formaldehyde and Other Carbonyl Compounds in Ambient Air Using Adsorbent Cartridge Followed by High Performance Liquid Chromatography (HPLC) EPA Compendium Method T0-11A
SVM-13A	Determination of Polycyclic Aromatic Hydrocarbons (PAHs) in Ambient Air Using Gas Chromatography/Mass Spectrometry (GC/MS)
SVM-M8315A	Determination of Carbonyl Compounds in Solid and Liquid Samples by High Performance Liquid Chromatography (HPLC) per Modified EPA Method 8315A
SVM-NCASI_MeOH	Determination of Methanol, Acetaldehyde, MEK and Propionaldehyde in Pulp and Paper Process Liquids by GC/FID
SVM-OACIDS	Determination of Volatile Amines in Ambient Air Using GC/NPD
SVM-OSHA_07	Determination of Organic Vapors Using GC/FID in Accordance with OSHA Method 07

UNCONTROLLED COPY

LABORATORY STANDARD OPERATING PROCEDURES & MANUALS	
SOP CODE	**TITLE**
VOA-BTU	Calculating Heat Value, Compressibility Factor, and Relative Density of Gaseous Fuels in Accordance with ASTM D 3588
VOA-CARB410M	Analysis of Benzene and Other Aromatic Hydrocarbons by Gas Chromatography with Photoionization Detection by Modified CARB 410
VOA-DISGAS	Dissolved Gas Analysis in Aqueous Samples Using a GC Headspace Equilibration Technique
VOA-EPA25C	Determination of Total Gaseous Nonmethane Organic (TGNMO) Emissions as Carbon in Landfill Gases in Accordance with EPA Method 25C
VOA-EPA25CM	Determination of Methane, Carbon Monoxide, Carbon Dioxide, and Total Gaseous Nonmethane Organic (TGNMO) Emissions as Carbon in Landfill Gases According to Modified EPA Method 25C
VOA-EPA3C	Determination of Hydrogen, Carbon Monoxide, Carbon Dioxide, Nitrogen, Methane, and Oxygen using Gas Chromatography with Thermal Conductivity Detection (TCD) in Accordance with EPA Method 3C or ASTM D 1946
VOA-MAPH	Determination of Air-Phase Petroleum HC by GC/MS
VOA-NCASI	Impinger/Canister Source Sampling Method for Selected HAPS and Other Compounds at Wood Product Facilities
VOA-S307M_SCD	Analysis of Sulfur Compounds in a Gaseous Matrix by Gas Chromatography with Sulfur Chemiluminescence Detection per ASTM D 5504 and Modified SCAQMD Method 307
VOA-SH20_SCD	Analysis of Sulfur Compounds in Liquid Samples by Gas Chromatography with Sulfur Chemiluminescence Detection
VOA-TO15	Determination of Volatile Organic Compounds in Air Samples Collected in Specially Prepared Canisters and Gas Collection Bags and Analyzed by Gas Chromatography/Mass Spectrometry (GC/MS)
VOA-TO17	Determination of VOCs in Ambient Air Using Active or Passive Sampling Onto Sorbent Tubes
VOA-TO3C1C6	Analysis of C1-C6+ using Gas Chromatography with Flame Ionization Detection (FID) in Accordance with a Modification of EPA Compendium Method TO-3
VOA-TO3MeOH	Analysis of Various Compounds using Gas Chromatography with Flame Ionization Detection (FID) in Accordance with a Modification of EPA Compendium Method TO-3
VOA-TPHG_TO3	Analysis of Total Petroleum Hydrocarbons as Gasoline in Air by Gas Chromatography with Flame Ionization Detection

UNCONTROLLED COPY

APPENDIX D

DATA QUALIFIERS

UNCONTROLLED COPY

Flag[1]	Data Qualifiers - Definition	Uncertain: Identity / Concentration
B	Analyte found in method blank	No/yes
J	[1]The analyte was positively identified below the method reporting limit; the associated numerical value is considered estimated. [2]The analyte was positively identified below the method reporting limit prior to utilizing the dilution factor, the associated numerical value is considered estimated.	No/yes
PI	Possible/Probable interference and/or analyte whose concentration has a greater than 25% difference for detected concentrations between the GC primary and confirmation columns.	No/yes
NQ	Result qualitatively confirmed but not able to quantify.	No/yes
E	Estimated; result based on response outside calibration range.	No/yes
C	Confirmed by GC/MS.	No/no
D	Duplicate precision not within specified limits.	No action taken by data user on the data alone.
IS	Internal standard not within specified limits.	No/yes
I	Surrogate recovery not within specified limits.	No/yes
L	Laboratory control sample recovery not within specified limits (high/low). *(LCS w/no prep)*	No/yes
L1	Laboratory control sample recovery outside specified limits; results may be biased (high/low). *(LCS with prep like TO-13A, TO-4A, TO-10A, 8270C, RSK, sulfur or MeOH in water)*	No/yes
RT	Result quantified but corresponding peak was detected outside of generated retention time window.	Yes/no
M	Matrix interference; results may be biased (high/low).	No/yes (possible)
R	Result is rejected due to the fact that the presence or absence of the analyte can not be verified. ***(consult PM before using this qualifier)***	Yes/yes
G	Quantitated using fuel calibration, but pattern does not match current gasoline standard.	Yes/yes
NX	Chromatogram does not resemble (*enter compound*).	Yes/yes
BT	Indicates possible breakthrough – result for back section ≥10% of result from front section of tube.	No/yes
BH	The back portion of the sampling tube yielded higher results than the front.	No/yes
PC	Possible/Probable contamination	No/yes
ND	[1]Compound was analyzed for, but not detected above the **laboratory detection limit**. *(if "J" flagging)* [2]Compound was analyzed for, but not detected above the **laboratory reporting limit**.	No/no
NF	Compound was searched for, but not found. *(for specified TICs)*	No/no
NA	Not applicable.	No/no
F	Analyte was found in the field blank.	No/yes
V	The continuing calibration verification standard was outside the method limits for this compound; results may be biased (high/low).	No/yes
#	Analyte was detected above the method reporting limit prior to normalization.	No/no

[1]*The flags listed above should be reported in the qualifier column.*

Note[2]	Definition	Uncertain: Identity / Concentration
T	Analyte is a tentatively identified compound, result is estimated.	No/yes
H	Sample analyzed outside of holding time.	No/yes
RH	Sample received outside of holding time.	No/yes
BC	Results reported are not blank corrected. *(AIHA analyses only)*	No/yes
DE	Results reported are corrected for desorption efficiency.	No/yes
EH	Sample extracted outside of extraction hold time.	No/no

[2]*The notes listed above should be reported in the test notes area of the report.*

UNCONTROLLED COPY

APPENDIX E

CERTIFICATIONS

UNCONTROLLED COPY

The American Industrial Hygiene Association

acknowledges that

OVER TWENTY FIVE YEARS 25 OF ACCREDITING LABS AIHA

Columbia Analytical Services, Inc.

Simi Valley, CA

Laboratory #101661

has fulfilled the requirements of the AIHA Laboratory Quality Assurance Programs (LQAP), thereby, conforming to the ISO/IEC 17025 international standard, *General Requirements for the Competence of Testing and Calibration Laboratories.* The above named laboratory has been accredited by AIHA in the following:

ACCREDITATION PROGRAMS

☑ **INDUSTRIAL HYGIENE**	Accreditation Expires: 03/01/06
☐ **ENVIRONMENTAL LEAD**	Accreditation Expires:
☐ **ENVIRONMENTAL MICROBIOLOGY**	Accreditation Expires:
☐ **FOOD**	Accreditation Expires:
☐ **OTHER**	Accreditation Expires:

Specific categories of testing, within each Accreditation Program, for which the above named laboratory maintains accreditation is outlined on the attached **Scope of Accreditation**. Continued accreditation is contingent upon successful on-going compliance with LQAP requirements. This certificate is not valid without the attached **Scope of Accreditation**.

Gustavo A. Delgado, PhD
Chairperson, Analytical Accreditation Board

Gayla J. McCluskey, CIH, CSP, PhD, ROH, QEP
President, AIHA

Date Issued: 03/01/03

UNCONTROLLED COPY

AIHA Laboratory Quality Assurance Programs

SCOPE OF ACCREDITATION

Columbia Analytical Services, Inc.
Simi Valley, CA

Laboratory ID: 101661
Issue Date: 03/01/03

Clients are urged to verify the laboratory's accreditation status for particular categories of testing. Lists of accredited laboratories with current scope of accreditation and analytical methods where specified are available on the AIHA website at www.aiha.org/lists.html. The "▼" symbol indicates that the laboratory is approved for specific analytical methods within that category of testing. A list of current analytical methods covering the scopes for which the laboratory is accredited shall be available to customers and the accreditation body from the laboratory upon request.

☑ IHLAP Initial Accreditation Date: 09/01/94

Inorganics
- ❑ Ion Chromatography
- ❑ Atomic Absorption & Emission
- ❑ ICP, DCP, ICP-MS
- ❑ Infra-Red (IR)
- ❑ UV/VIS
- ❑ Gravimetric
- ❑ Titrimetric
- ❑ Ion-Selective Electrode (ISE)
- ❑ XRD
- ❑ Other (Technique & Method Specific)

Organics
- ☑ GC
- ❑ IR
- ❑ LC
- ❑ GC/MS
- ❑ UV/VIS
- ❑ Other (Technique & Method Specific)

Asbestos

Air
- ❑ Optical Microscopy
- ❑ Electron Microscopy

Bulk
- ❑ Optical Microscopy
- ❑ Electron Microscopy

❑ ELLAP Initial Accreditation Date: 00/00/00
- ❑ Paint
- ❑ Soil
- ❑ Dust
- ❑ Air

❑ OTHER Initial Accreditation Date: 00/00/00
- ❑ Method - Specific

❑ EMLAP Initial Accreditation Date: 00/00/00

Fungal
Laboratory Culture
- ❑ **Air**
- ❑ **Bulk**

Bacterial
Laboratory Culture
- ❑ **Air**
- ❑ **Bulk**

Fungal Direct Examination
Non-Culture
- ❑ **Bulk**
  - ○ Direct Examination
  - ○ Tape Slides

❑ FOODLAP Initial Accreditation Date: 00/00/00

Microbiology
Quantitative & Qualitative

Analyte Class
- ❑ Salmonella
- ❑ Listeria
- ❑ E. coli 0157:H7
- ❑ E. coli
- ❑ Staphylococcus
- ❑ Yeast/Mold
- ❑ Aerobic Plate Count
- ❑ Coliform
- ❑ Other

Chemistry
Quantitative

Analyte Class
- ❑ Fat
- ❑ Moisture
- ❑ Protein
- ❑ Salt
- ❑ Ash
- ❑ Vitamins
- ❑ Minerals
- ❑ Dietary Fiber
- ❑ Sugars
- ❑ Cholesterol
- ❑ Sodium
- ❑ Other

Residue Chemistry
Quantitative

Analyte Class
- ❑ Pesticides (Halogenated, NP, Carbamate)
- ❑ Halogenated Hydrocarbons
- ❑ Sulfonamides
- ❑ Nitrosamines
- ❑ Toxic Elements
- ❑ Mycotoxins
- ❑ Drug Residue
- ❑ Other

OVER TWENTY FIVE YEARS 25 OF ACCREDITING LABS AIHA
UNCONTROLLED COPY

Arizona Department of Health Services

ENVIRONMENTAL LABORATORY LICENSE

Issued to:

Laboratory Director: **John Yokoyama**
Owner/Representative: **Stephen Vincent**

Columbia Analytical Services, Inc.
AZ0550

is in compliance with Environmental Laboratory's applicable standards for the State of Arizona and maintains on file a List of Parameters for which the laboratory is certified to perform analysis.

PERIOD OF LICENSURE FROM: 07/11/2005 TO: 07/10/2006

GREAT SEAL OF THE STATE OF ARIZONA
DITAT DEUS
1912

Steven D. Baker, Chief
Office of Laboratory Licensure,
Certification & Training
Bureau of State Laboratory Services

UNCONTROLLED COPY

Arizona Department of Health Services
Office of Laboratory Licensure, Certification & Training
250 North 17th Avenue, Phoenix, AZ 85007

Tuesday, May 17 2005

AZ License: AZ0550

Lab Director: Mr. John Yokoyama

Lab Name: Columbia Analytical Services, Inc.
Phone: (805) 526-7161
Fax: (805) 526-7270

Program AIR

Parameter	EPA Method	Billing Code	Cert Date
Volatile Organic Compounds	METHOD TO-15	AIR17	03/14/00

Total Licensed Parameters in this Program: 1

Instruments	Quantity	Date
GAS CHROMATOGRAPH/MASS SPECTROMETER	4	08/05/96

Softwares
ENVIROQUANT - GCMS
CHEMSTATION - GC/MS

UNCONTROLLED COPY

STATE OF CALIFORNIA
DEPARTMENT OF HEALTH SERVICES
ENVIRONMENTAL LABORATORY ACCREDITATION PROGRAM

ENVIRONMENTAL LABORATORY CERTIFICATION

Is hereby granted to

COLUMBIA ANALYTICAL SERVICES, INC.

SIMI VALLEY

2665 PARK CENTER DRIVE, SUITE D

SIMI VALLEY, CA 93065

Scope of certification is limited to the
"Accredited Fields of Testing"
which accompanies this Certificate.

Continued certification status depends on successful completion of site visit, proficiency testing studies, and payment of applicable fees.

This Certificate is granted in accordance with provisions of Section 100825, et seq. of the Health and Safety Code.

Certificate No.: **2380**

Expiration Date: **09/30/2007**

Effective Date: **09/01/2005**

Richmond, California
subject to forfeiture or revocation

George C. Kulasingam, Ph.D.
Program Chief
Environmental Laboratory Accreditation Program

UNCONTROLLED COPY

CALIFORNIA DEPARTMENT OF HEALTH SERVICES
ENVIRONMENTAL LABORATORY ACCREDITATION PROGRAM
Accredited Fields of Testing

COLUMBIA ANALYTICAL SERVICES, INC.
SIMI VALLEY
2665 PARK CENTER DRIVE, SUITE D
SIMI VALLEY, CA 93065

Lab Phone (805) 526-7161

Certificate No: 2380 **Renew Date: 09/30/2007**

Field of Testing: 117 - Semi-volatile Organic Chemistry of Hazardous Waste

117.060	000	Polynuclear Aromatic Hydrocarbons	EPA 8100

As of 12/27/2005 , this list supersedes all previous lists for this certificate number.
Customers: Please verify the current accreditation standing with the State.

Page 1 of 1

UNCONTROLLED COPY

UNCONTROLLED COPY

State of New Jersey
Department of Environmental Protection
Certifies That

Columbia Analytical Services Inc.

Laboratory Certification ID #: CA009

having duly met the requirements of the

Regulations Governing The Certification Of
Laboratories And Environmental Measurements N.J.A.C. 7:18 et. seq.

and

having been found compliant with the standards approved by the

National Environmental Laboratory Accreditation Conference

is hereby approved as a

State Certified Environmental Laboratory

to perform the analyses as indicated on the Annual Certified Parameter List
which must accompany this certificate to be valid

Expiration Date June 30, 2006

Joseph F. Aiello, Chief
Office of Quality Assurance

NJDEP is a NELAP Recognized Accrediting Authority

THIS CERTIFICATE IS TO BE CONSPICUOUSLY DISPLAYED AT THE LABORATORY WITH THE ANNUAL CERTIFIED PARAMETER LIST IN A LOCATION ON THE PREMISES VISIBLE TO THE PUBLIC

New Jersey Department of Environmental Protection

National Environmental Laboratory Accreditation Program

ANNUAL CERTIFIED PARAMETER LIST AND CURRENT STATUS

Effective as of 07/01/2005 until 06/30/2006

Laboratory Name: COLUMBIA ANALYTICAL SERVICES INC Laboratory Number: CA009 Activity ID: NLC050001
2665 PARK CTR DR
STE D
SIMI VALLEY, CA 93065

Category: CAP03 -- Atmospheric Organic Parameters

Status	Eligible to Report NJ Data	State	Code	Matrix	Technique Description	Approved Method	Parameter Description
Certified	Yes	NJ	CAP03.00180	AE	GC/MS, Canisters	[EPA TO-15]	Acetaldehyde
Certified	Yes	NJ	CAP03.00184	AE	GC/MS, Canisters	[EPA TO-15]	Acetone
Certified	Yes	NJ	CAP03.00190	AE	GC/MS, Canisters	[EPA TO-15]	Acetophenone
Certified	Yes	NJ	CAP03.00195	AE	GC/MS, Canisters	[EPA TO-15]	Acrolein
Certified	Yes	NJ	CAP03.00200	AE	GC/MS, Canisters	[EPA TO-15]	Acrylamide
Certified	Yes	NJ	CAP03.00205	AE	GC/MS, Canisters	[EPA TO-15]	Acrylic acid
Certified	Yes	NJ	CAP03.00215	AE	GC/MS, Canisters	[EPA TO-15]	Allyl chloride
Certified	Yes	NJ	CAP03.00225	AE	GC/MS, Canisters	[EPA TO-15]	Benzene
Certified	Yes	NJ	CAP03.00235	AE	GC/MS, Canisters	[EPA TO-15]	Propiolactone (beta-)
Certified	Yes	NJ	CAP03.00240	AE	GC/MS, Canisters	[EPA TO-15]	Bis (2-chloroethyl) ether
Certified	Yes	NJ	CAP03.00245	AE	GC/MS, Canisters	[EPA TO-15]	Bis (chloromethyl) ether
Certified	Yes	NJ	CAP03.00250	AE	GC/MS, Canisters	[EPA TO-15]	Bromodichloromethane
Certified	Yes	NJ	CAP03.00255	AE	GC/MS, Canisters	[EPA TO-15]	Bromoform
Certified	Yes	NJ	CAP03.00260	AE	GC/MS, Canisters	[EPA TO-15]	Bromomethane
Certified	Yes	NJ	CAP03.00265	AE	GC/MS, Canisters	[EPA TO-15]	Butadiene (1,3-)
Certified	Yes	NJ	CAP03.00270	AE	GC/MS, Canisters	[EPA TO-15]	Carbon disulfide
Certified	Yes	NJ	CAP03.00275	AE	GC/MS, Canisters	[EPA TO-15]	Carbon tetrachloride
Certified	Yes	NJ	CAP03.00280	AE	GC/MS, Canisters	[EPA TO-15]	Carbon oxysulfide (Carbonyl sulfide)
Certified	Yes	NJ	CAP03.00285	AE	GC/MS, Canisters	[EPA TO-15]	Catechol
Certified	Yes	NJ	CAP03.00295	AE	GC/MS, Canisters	[EPA TO-15]	Chloroacetic acid
Certified	Yes	NJ	CAP03.00300	AE	GC/MS, Canisters	[EPA TO-15]	Chlorobenzene
Certified	Yes	NJ	CAP03.00305	AE	GC/MS, Canisters	[EPA TO-15]	Chloroethane
Certified	Yes	NJ	CAP03.00310	AE	GC/MS, Canisters	[EPA TO-15]	Chloroform
Certified	Yes	NJ	CAP03.00315	AE	GC/MS, Canisters	[EPA TO-15]	Chloromethane
Certified	Yes	NJ	CAP03.00320	AE	GC/MS, Canisters	[EPA TO-15]	Chloromethyl methyl ether
Certified	Yes	NJ	CAP03.00325	AE	GC/MS, Canisters	[EPA TO-15]	Chlorotoluene (2-)
Certified	Yes	NJ	CAP03.00330	AE	GC/MS, Canisters	[EPA TO-15]	Cresols/Cresylic acid
Certified	Yes	NJ	CAP03.00335	AE	GC/MS, Canisters	[EPA TO-15]	Cyclohexane
Certified	Yes	NJ	CAP03.00342	AE	GC/MS, Canisters	[EPA TO-15]	Dibromochloromethane
Certified	Yes	NJ	CAP03.00350	AE	GC/MS, Canisters	[EPA TO-15]	Dibromoethane (1,2-) (EDB)
Certified	Yes	NJ	CAP03.00355	AE	GC/MS, Canisters	[EPA TO-15]	Dichlorobenzene (1,2-)

KEY: AE = Air and Emissions, BT = Biological Tissues, DW = Drinking Water, NPW = Non-Potable Water, SCM = Solid and Chemical Materials

UNCONTROLLED COPY

New Jersey Department of Environmental Protection

National Environmental Laboratory Accreditation Program

ANNUAL CERTIFIED PARAMETER LIST AND CURRENT STATUS

Effective as of 07/01/2005 until 06/30/2006

Laboratory Name: COLUMBIA ANALYTICAL SERVICES INC Laboratory Number: CA009 Activity ID: NLC050001
2665 PARK CTR DR
STE D
SIMI VALLEY, CA 93065

Category: CAP03 -- Atmospheric Organic Parameters

Status	Eligible to Report NJ Data	State	Code	Matrix	Technique Description	Approved Method	Parameter Description
Certified	Yes	NJ	CAP03.00360	AE	GC/MS, Canisters	[EPA TO-15]	Dichlorobenzene (1,3-)
Certified	Yes	NJ	CAP03.00365	AE	GC/MS, Canisters	[EPA TO-15]	Dichlorobenzene (1,4-)
Certified	Yes	NJ	CAP03.00368	AE	GC/MS, Canisters	[EPA TO-15]	Dichlorodifluoromethane
Certified	Yes	NJ	CAP03.00370	AE	GC/MS, Canisters	[EPA TO-15]	Dichloroethane (1,1-)
Certified	Yes	NJ	CAP03.00375	AE	GC/MS, Canisters	[EPA TO-15]	Dichloroethane (1,2-)
Certified	Yes	NJ	CAP03.00380	AE	GC/MS, Canisters	[EPA TO-15]	Dichloroethene (1,1-)
Certified	Yes	NJ	CAP03.00384	AE	GC/MS, Canisters	[EPA TO-15]	Dichloroethene (cis-1,2-)
Certified	Yes	NJ	CAP03.00385	AE	GC/MS, Canisters	[EPA TO-15]	Dichloroethene (trans-1,2-)
Certified	Yes	NJ	CAP03.00390	AE	GC/MS, Canisters	[EPA TO-15]	Dichlorofluoromethane
Certified	Yes	NJ	CAP03.00395	AE	GC/MS, Canisters	[EPA TO-15]	Dichloropropane (1,2-)
Certified	Yes	NJ	CAP03.00400	AE	GC/MS, Canisters	[EPA TO-15]	Dichloropropene (cis-1,3-)
Certified	Yes	NJ	CAP03.00401	AE	GC/MS, Canisters	[EPA TO-15]	Dichloropropene (trans-1,3-)
Certified	Yes	NJ	CAP03.00405	AE	GC/MS, Canisters	[EPA TO-15]	Dichlorotetrafluoroethane (1,2-)
Certified	Yes	NJ	CAP03.00410	AE	GC/MS, Canisters	[EPA TO-15]	Diethyl sulfate
Certified	Yes	NJ	CAP03.00415	AE	GC/MS, Canisters	[EPA TO-15]	Dimethyl sulfate
Certified	Yes	NJ	CAP03.00425	AE	GC/MS, Canisters	[EPA TO-15]	Dimethylcarbamoyl chloride
Certified	Yes	NJ	CAP03.00430	AE	GC/MS, Canisters	[EPA TO-15]	Dimethyl formamide (N, N-)
Certified	Yes	NJ	CAP03.00440	AE	GC/MS, Canisters	[EPA TO-15]	Dioxane (1,4)
Certified	Yes	NJ	CAP03.00445	AE	GC/MS, Canisters	[EPA TO-15]	Epichlorohydrin
Certified	Yes	NJ	CAP03.00450	AE	GC/MS, Canisters	[EPA TO-15]	Epoxybutane (1,2-)
Certified	Yes	NJ	CAP03.00455	AE	GC/MS, Canisters	[EPA TO-15]	Ethyl acrylate
Certified	Yes	NJ	CAP03.00460	AE	GC/MS, Canisters	[EPA TO-15]	Ethyl carbamate
Certified	Yes	NJ	CAP03.00465	AE	GC/MS, Canisters	[EPA TO-15]	Ethylbenzene
Certified	Yes	NJ	CAP03.00470	AE	GC/MS, Canisters	[EPA TO-15]	Ethylene Oxide
Certified	Yes	NJ	CAP03.00480	AE	GC/MS, Canisters	[EPA TO-15]	Ethyltoluene (4-)
Certified	Yes	NJ	CAP03.00485	AE	GC/MS, Canisters	[EPA TO-15]	Formaldehyde
Certified	Yes	NJ	CAP03.00490	AE	GC/MS, Canisters	[EPA TO-15]	Hexachlorobutadiene (1,3-)
Certified	Yes	NJ	CAP03.00498	AE	GC/MS, Canisters	[EPA TO-15]	Hexanone (2-)
Certified	Yes	NJ	CAP03.00500	AE	GC/MS, Canisters	[EPA TO-15]	Heptane (n-)
Certified	Yes	NJ	CAP03.00505	AE	GC/MS, Canisters	[EPA TO-15]	Hexane (n-)
Certified	Yes	NJ	CAP03.00510	AE	GC/MS, Canisters	[EPA TO-15]	Isophorone
Certified	Yes	NJ	CAP03.00520	AE	GC/MS, Canisters	[EPA TO-15]	Methyl alcohol (Methanol)

KEY: AE = Air and Emissions, BT = Biological Tissues, DW = Drinking Water, NPW = Non-Potable Water, SCM = Solid and Chemical Materials

UNCONTROLLED COPY

UNCONTROLLED COPY

New Jersey Department of Environmental Protection

National Environmental Laboratory Accreditation Program

ANNUAL CERTIFIED PARAMETER LIST AND CURRENT STATUS

Effective as of 07/01/2005 until 06/30/2006

Laboratory Name: COLUMBIA ANALYTICAL SERVICES INC Laboratory Number: CA009 Activity ID: NLC050001
2665 PARK CTR DR
STE D
SIMI VALLEY, CA 93065

Category: CAP03 -- Atmospheric Organic Parameters

Status	Eligible to Report NJ Data	State	Code	Matrix	Technique Description	Approved Method	Parameter Description
Certified	Yes	NJ	CAP03.00525	AE	GC/MS, Canisters	[EPA TO-15]	Methyl ethyl ketone
Certified	Yes	NJ	CAP03.00535	AE	GC/MS, Canisters	[EPA TO-15]	Methyl isobutyl ketone
Certified	Yes	NJ	CAP03.00540	AE	GC/MS, Canisters	[EPA TO-15]	Methyl isocyanate
Certified	Yes	NJ	CAP03.00545	AE	GC/MS, Canisters	[EPA TO-15]	Methyl methacrylate
Certified	Yes	NJ	CAP03.00550	AE	GC/MS, Canisters	[EPA TO-15]	Methyl tert-butyl ether
Certified	Yes	NJ	CAP03.00555	AE	GC/MS, Canisters	[EPA TO-15]	Methylene chloride (Dichloromethane)
Certified	Yes	NJ	CAP03.00565	AE	GC/MS, Canisters	[EPA TO-15]	Methylphenol (2-)
Certified	Yes	NJ	CAP03.00570	AE	GC/MS, Canisters	[EPA TO-15]	Nitrobenzene
Certified	Yes	NJ	CAP03.00575	AE	GC/MS, Canisters	[EPA TO-15]	Nitropropane (2-)
Certified	Yes	NJ	CAP03.00580	AE	GC/MS, Canisters	[EPA TO-15]	N-Nitrosodimethylamine
Certified	Yes	NJ	CAP03.00585	AE	GC/MS, Canisters	[EPA TO-15]	N-Nitrosomorpholine
Certified	Yes	NJ	CAP03.00590	AE	GC/MS, Canisters	[EPA TO-15]	N-Nitroso-N-methylurea
Certified	Yes	NJ	CAP03.00595	AE	GC/MS, Canisters	[EPA TO-15]	Phenol
Certified	Yes	NJ	CAP03.00600	AE	GC/MS, Canisters	[EPA TO-15]	Phosgene
Certified	Yes	NJ	CAP03.00605	AE	GC/MS, Canisters	[EPA TO-15]	Propionaldehyde
Certified	Yes	NJ	CAP03.00615	AE	GC/MS, Canisters	[EPA TO-15]	Propylene oxide
Certified	Yes	NJ	CAP03.00620	AE	GC/MS, Canisters	[EPA TO-15]	Propane sultone (1,3-)
Certified	Yes	NJ	CAP03.00625	AE	GC/MS, Canisters	[EPA TO-15]	Styrene
Certified	Yes	NJ	CAP03.00630	AE	GC/MS, Canisters	[EPA TO-15]	Styrene oxide
Certified	Yes	NJ	CAP03.00635	AE	GC/MS, Canisters	[EPA TO-15]	Trichlorobenzene (1,2,4-)
Certified	Yes	NJ	CAP03.00640	AE	GC/MS, Canisters	[EPA TO-15]	Trimethylbenzene (1,3,5-)
Certified	Yes	NJ	CAP03.00645	AE	GC/MS, Canisters	[EPA TO-15]	Trimethylbenzene (1,2,4-)
Certified	Yes	NJ	CAP03.00650	AE	GC/MS, Canisters	[EPA TO-15]	Trimethylpentane (2,2,4-)
Certified	Yes	NJ	CAP03.00655	AE	GC/MS, Canisters	[EPA TO-15]	Tetrachloroethane (1,1,2,2-)
Certified	Yes	NJ	CAP03.00660	AE	GC/MS, Canisters	[EPA TO-15]	Tetrachloroethene
Certified	Yes	NJ	CAP03.00665	AE	GC/MS, Canisters	[EPA TO-15]	Toluene
Certified	Yes	NJ	CAP03.00670	AE	GC/MS, Canisters	[EPA TO-15]	Trichloroethane (1,1,1-)
Certified	Yes	NJ	CAP03.00675	AE	GC/MS, Canisters	[EPA TO-15]	Trichloroethane (1,1,2-)
Certified	Yes	NJ	CAP03.00680	AE	GC/MS, Canisters	[EPA TO-15]	Trichloroethene
Certified	Yes	NJ	CAP03.00684	AE	GC/MS, Canisters	[EPA TO-15]	Trichlorofluoromethane
Certified	Yes	NJ	CAP03.00685	AE	GC/MS, Canisters	[EPA TO-15]	Trichloro (1,1,2-) trifluoroethane (1,2,2-)
Certified	Yes	NJ	CAP03.00695	AE	GC/MS, Canisters	[EPA TO-15]	Trifluoromethane

KEY: AE = Air and Emissions, BT = Biological Tissues, DW = Drinking Water, NPW = Non-Potable Water, SCM = Solid and Chemical Materials

New Jersey Department of Environmental Protection

National Environmental Laboratory Accreditation Program

ANNUAL CERTIFIED PARAMETER LIST AND CURRENT STATUS

Effective as of 07/01/2005 until 06/30/2006

Laboratory Name: COLUMBIA ANALYTICAL SERVICES INC Laboratory Number: CA009 Activity ID: NLC050001
2665 PARK CTR DR
STE D
SIMI VALLEY, CA 93065

Category: CAP03 -- Atmospheric Organic Parameters

Status	Eligible to Report NJ Data	State	Code	Matrix	Technique Description	Approved Method	Parameter Description
Certified	Yes	NJ	CAP03.00700	AE	GC/MS, Canisters	[EPA TO-15]	Vinyl acetate
Certified	Yes	NJ	CAP03.00705	AE	GC/MS, Canisters	[EPA TO-15]	Vinyl bromide
Certified	Yes	NJ	CAP03.00710	AE	GC/MS, Canisters	[EPA TO-15]	Vinyl chloride
Certified	Yes	NJ	CAP03.00715	AE	GC/MS, Canisters	[EPA TO-15]	Xylene (m-)
Certified	Yes	NJ	CAP03.00720	AE	GC/MS, Canisters	[EPA TO-15]	Xylene (o-)
Certified	Yes	NJ	CAP03.00725	AE	GC/MS, Canisters	[EPA TO-15]	Xylene (p-)
Certified	Yes	NJ	CAP03.00730	AE	GC/MS, Canisters	[EPA TO-15]	Xylenes (total)

Michael Miller for JFA

Joseph F. Aiello, Chief

KEY: AE = Air and Emissions, BT = Biological Tissues, DW = Drinking Water, NPW = Non-Potable Water, SCM = Solid and Chemical Materials

UNCONTROLLED COPY

NEW YORK STATE DEPARTMENT OF HEALTH
WADSWORTH CENTER
Antonia C. Novello, M.D., M.P.H., Dr.P.H.

Expires 12:01 AM April 01, 2006
Issued April 01, 2005
Revised April 29, 2005

CERTIFICATE OF APPROVAL FOR LABORATORY SERVICE

Issued in accordance with and pursuant to section 502 Public Health Law of New York State

MR. EDWARD WILSON
COLUMBIA ANALYTICAL SERVICES INC. -SIMI VALLEY
2665 PARK CENTER DR, SUITE D
SIMI VALLEY CA 93065 UNITED STATES

NY Lab Id No: 11221
EPA Lab Code: CA00404

is hereby APPROVED as an Environmental Laboratory in conformance with the National Environmental Laboratory Accreditation Conference Standards for the category ENVIRONMENTAL ANALYSES AIR AND EMISSIONS All approved analytes are listed below:

Acrylates	
Acrylonitrile	EPA TO-15
Ethyl acrylate	EPA TO-15
Methyl methacrylate	EPA TO-15
Chlorinated Hydrocarbons	
1,2,4-Trichlorobenzene	EPA TO-15
Hexachlorobutadiene	EPA TO-15
Miscellaneous Air	
Formaldehyde	EPA TO-15
Purgeable Aromatics	
1,2-Dichlorobenzene	EPA TO-15
1,4-Dichlorobenzene	EPA TO-15
Benzene	EPA TO-15
Chlorobenzene	EPA TO-15
Ethyl benzene	EPA TO-15
Styrene	EPA TO-15
Toluene	EPA TO-15
Total Xylenes	EPA TO-15
Purgeable Halocarbons	
1,1,1-Trichloroethane	EPA TO-15
1,1,2,2-Tetrachloroethane	EPA TO-15
1,1,2-Trichloroethane	EPA TO-15
Purgeable Halocarbons	
1,1-Dichloroethane	EPA TO-15
1,1-Dichloroethene	EPA TO-15
1,2-Dichloroethane	EPA TO-15
1,2-Dichloropropane	EPA TO-15
Bromoform	EPA TO-15
Bromomethane	EPA TO-15
Carbon tetrachloride	EPA TO-15
Chloroethane	EPA TO-15
Chloroform	EPA TO-15
Chloromethane	EPA TO-15
cis-1,2-Dichloroethene	EPA TO-15
cis-1,3-Dichloropropene	EPA TO-15
Methylene chloride	EPA TO-15
Tetrachloroethene	EPA TO-15
trans-1,2-Dichloroethene	EPA TO-15
trans-1,3-Dichloropropene	EPA TO-15
Trichloroethene	EPA TO-15
Vinyl chloride	EPA TO-15
Volatile Chlorinated Organics	
Epichlorohydrin	EPA TO-15
Volatile Organics	
2-Butanone (Methylethyl ketone)	EPA TO-15

Serial No.: 26588

Property of the New York State Department of Health. Valid only at the address shown. Must be conspicuously posted. Valid certificates have a raised seal. Continued accreditation depends on successful ongoing participation in the Program. Consumers are urged to call (518) 485-5570 to verify laboratory's accreditation status.

Page 1 of 2

UNCONTROLLED COPY

NEW YORK STATE DEPARTMENT OF HEALTH
WADSWORTH CENTER
Antonia C. Novello, M.D., M.P.H., Dr.P.H.

Expires 12:01 AM April 01, 2006
Issued April 01, 2005
Revised April 29, 2005

CERTIFICATE OF APPROVAL FOR LABORATORY SERVICE

Issued in accordance with and pursuant to section 502 Public Health Law of New York State

MR. EDWARD WILSON
COLUMBIA ANALYTICAL SERVICES INC. -SIMI VALLEY
2665 PARK CENTER DR, SUITE D
SIMI VALLEY CA 93065 UNITED STATES

NY Lab Id No: 11221
EPA Lab Code: CA00404

is hereby APPROVED as an Environmental Laboratory in conformance with the National Environmental Laboratory Accreditation Conference Standards for the category ENVIRONMENTAL ANALYSES AIR AND EMISSIONS All approved analytes are listed below:

Volatile Organics

Hexane	EPA TO-15
Methyl tert-butyl ether	EPA TO-15
Vinyl acetate	EPA TO-15

Serial No.: 26588

Property of the New York State Department of Health. Valid only at the address shown. Must be conspicuously posted. Valid certificates have a raised seal. Continued accreditation depends on successful ongoing participation in the Program. Consumers are urged to call (518) 485-5570 to verify laboratory's accreditation status.

Page 2 of 2

UNCONTROLLED COPY

OREGON

ENVIRONMENTAL LABORATORY ACCREDITATION PROGRAM

NELAP Recognized

Columbia Analytical Services, Inc.

CA200007

2665 Park Center Drive, Suite D
Simi Valley, CA 93065

IS GRANTED APPROVAL BY ORELAP. UNDER THE 2002 NELAC STANDARDS, TO PERFORM ANALYSES ON ENVIRONMENTAL SAMPLES IN MATRICES AS LISTED BELOW:

	Air	*Potable Water*	*Non Potable Water*	*Solids and Chem. Waste*	*Tissue*
Chemistry					

AND AS RECORDED IN THE LIST OF APPROVED ANALYTES, METHODS, ANALYTIC TECHNIQUES, AND FIELDS OF TESTING ISSUED CONCURRENTLY WITH THIS CERTIFICATE AND REVISED AS NECESSARY.

ACCREDITED STATUS DEPENDS ON SUCCESSFUL ONGOING PARTICIPATION IN THE PROGRAM AND CONTINUED COMPLIANCE WITH THE STANDARDS.

CUSTOMERS ARE URGED TO VERIFY THE LABORATORY'S CURRENT ACCREDITATION STATUS IN OREGON.

Irene E. Ronning, Ph.D.
ORELAP Administrator
1717 SW 10th
Portland, OR 97201

ISSUE DATE: 5/13/2005
EXPIRATION DATE: 5/12/2006
Certificate No: CA200007-001

UNCONTROLLED COPY

Oregon

Environmental Laboratory Accreditation Program

Public Health Laboratory
1717 SW 10th Avenue
Portland, OR 97201
(503) 229-5505
FAX (503) 229-5682
TTY (503) 731-4031

NELAP Recognized

Department of Agriculture, Laboratory Division
Department of Environmental Quality, Laboratory Division
Department of Human Services, Public Health Laboratory

ORELAP Fields of Accreditation

ORELAPID: CA200007
EPACode:

Columbia Analytical Services, Inc.

Certificate: CA200007-001

2665 Park Center Drive, Suite D
Simi Valley, CA, 93065

Issue Date: 5/13/2005 ***Expiration Date:*** 5/12/2006

As of 5/13/2005 this list supercedes all previous lists for this certificate number.
Cusotmers: Please verify the current accreditation standing with ORELAP.

MATRIX: Air

Reference	*Code*	*Description*
EPA TO-15	120	VOCs collected in Canisters by GC/MS

Analyte Code	*Analyte*
5160	1,1,1-Trichloroethane
5110	1,1,2,2-Tetrachloroethane
5195	1,1,2-Trichloro-1,2,2-trifluoroethane
5165	1,1,2-Trichloroethane
4630	1,1-Dichloroethane
4640	1,1-Dichloroethylene
5155	1,2,4-Trichlorobenzene
5210	1,2,4-Trimethylbenzene
4635	1,2-Dichloroethane
4655	1,2-Dichloropropane
9396	1,2-Epoxybutane
5215	1,3,5-Trimethylbenzene
4615	1,3-Dichlorobenzene
9576	1,3-Propane sultone
4620	1,4-Dichlorobenzene
4735	1,4-Dioxane (1,4- Diethyleneoxide)
5220	2,2,4-Trimethylpentane
4410	2-Butanone (Methyl ethyl ketone, MEK)
4860	2-Hexanone
6400	2-Methylphenol (o-Cresol)
5020	2-Nitropropane
158	4-Ethyltoluene
4645	cis-1,2-Dichloroethylene
4680	cis-1,3-Dichloropropene
4625	Dichlorodifluoromethane
4650	Dichloromethane (DCM, Methylene chloride)
6080	Diethyl sulfate
7480	Dimethyl carbamoyl chloride
7485	Dimethyl sulfate
4745	Epichlorohydrin (1-Chloro-2,3-epoxypropane)
4760	Ethyl acrylate
6250	Ethyl carbamate (Urethane)
4765	Ethylbenzene
4795	Ethylene oxide
4815	Formaldehyde

UNCONTROLLED COPY

ORELAPID: CA200007
EPACode:

Columbia Analytical Services, Inc.

Certificate: CA200007-001

2665 Park Center Drive, Suite D
Simi Valley, CA, 93065

Issue Date: 5/13/2005 ***Expiration Date:*** 5/12/2006

As of 5/13/2005 this list supercedes all previous lists for this certificate number.
Cusotmers: Please verify the current accreditation standing with ORELAP.

3815	Freon-114 (Dichlorotetrafluoroethane)
3820	Freon-12 (Dichlorodifluoromethane)
166	Heptane
4835	Hexachlorobutadiene
4850	Hexane
6320	Isophorone
4930	Methanol
4985	Methyl isobutyl ketone (MIBK)
9498	Methyl isocyanate
4990	Methyl methacrylate
5000	Methyl tert-butyl ether (MTBE)
5245	m-Xylene
5010	n,n-dimethyl formamide
5015	Nitrobenzene
6530	n-Nitrosodimethylamine
6555	n-Nitrosomorpholine
6520	n-Nitroso-n-methylurea
5250	o-Xylene
6625	Phenol
7995	Phosgene
9573	Propanal (Propionaldehyde)
9579	Propylene oxide
5255	p-Xylene
5100	Styrene
9594	Styrene oxide
5115	Tetrachloroethylene (Perchloroethylene)
5140	Toluene
4700	trans-1,2-Dicloroethylene
4685	trans-1,3-Dichloropropylene
5170	Trichloroethene (Trichloroethylene)
5175	Trichlorofluoromethane
256	Trifluoromethane
5225	Vinyl acetate
5230	Vinyl bromide
5235	Vinyl chloride
5260	Xylene (total)

UNCONTROLLED COPY

AIHA

Your Essential Connection

March 1, 2006

Lab ID#: 101661

Lynne Fulks
Columbia Analytical Services, Inc.
2665 Park Center Drive
Suite D
Simi Valley, CA 93065-6200

Dear Ms. Fulks:

The AIHA has approved an extension to your laboratory's current certificate of accreditation in the Industrial Hygiene Laboratory Accreditation Program (IHLAP). This extension will expire on June 1, 2006. Remember that your laboratory's proficiency rating in the PAT programs must be maintained for the new certificate to be issued.

Your laboratory remains an accredited laboratory in the IHLAP programs. Please keep a copy of this letter with your expired certificate. If you have questions or concerns, please feel free to contact Angela Oler, Laboratory Accreditation Specialist at (703) 846-0792

Sincerely,

Cheryl O. Morton

Cheryl O. Morton
Director, Laboratory Quality Assurance Dept.

CELEBRATING 30 Thirty Years of AIHA Accrediting Labs
SOUND DATA SMART DECISIONS
1974 – 2004

SOUND DATA

LABORATORY QUALITY ASSURANCE PROGRAMS

AIHA
Your Essential Connection: Advancing Occupational and Environmental Health and Safety Globally
2700 Prosperity Ave., Suite 250, Fairfax, VA 22031 U.S.A.
(703) 849-8888; Fax (703) 207-3561; www.aiha.org

UNCONTROLLED COPY

END OF DOCUMENT

UNCONTROLLED COPY

QUALITY MANAGEMENT PLAN

Revision: 6

October 2003

Approved by:

President and CEO: Rachel Brydon Janetta — Date: 11/11/2003

Senior Vice President, Chief Operating Officer: Dr. Keith C. Wheatstone — Date: 11/11/2003

Vice President, Client and Operation Services: Dr. Charles W. Carter — Date: 11/11/2003

Director of Quality Assurance: Raymond J. Frederici — Date: 11/11/2003

©COPYRIGHT 2003 SEVERN TRENT LABORATORIES. ALL RIGHTS RESERVED.

Table of Contents

1. Introduction, Purpose, and Scope 6

1.1. Severn Trent Laboratories (STL) Overview 6

1.2. Quality Assurance Policy 6

1.3. Management Commitment to Quality Assurance 8

1.4. Purpose 8

1.5. Scope 8

2. References 11

3. Terms and Definitions 11

4. Management Requirements 17

4.1. Organization and Management 17
4.1.1. Organization 17
4.1.2. Roles and Responsibilities 17

4.2. Quality System 21
4.2.1. Objectives of STL Quality System 21
4.2.2. Laboratory Quality Manual (LQM) 21

4.3. Document Control 22
4.3.1. Document Type 22
4.3.2. Document Control Procedure 22
4.3.3. Document Revision 23
4.3.4. Official Documents 23

4.4. Request, Tender, and Contract Review 23
4.4.1. Contract Review 23
4.4.2. Project Specific Quality Planning 24
4.4.3. Data Quality Objectives 24

4.5. Subcontracting 26

4.6. Purchasing Services and Supplies 27

4.7. Service to the Client 27
4.7.1. Sample Acceptance Policy 27
4.7.2. Client Confidentiality and Proprietary Rights 28

4.8. Complaints 28

4.9. Control of Non-conformances 29

4.10. Corrective Action 30
4.10.1. General 30
4.10.2. Initiation 30
4.10.3. Cause Analysis 30
4.10.4. Corrective Action 31
4.10.5. Monitoring Corrective Action 31

4.11. Preventative Action 31

4.12. Records 32
4.12.1. Record Types 32

4.12.2. Record Retention 32
4.12.3. Programs with Longer Retention Requirements 33
4.12.4. Archives and Record Transfer 33

4.13. Internal Audits 34
4.13.1. Audit Types and Frequency 34
4.13.2. Systems Audits 34
4.13.3. Data Audits 35
4.13.3.1. Data Authenticity Audits 35
4.13.3.2. Electronic Data Audits 36
4.13.3.3. Final Report Reviews 36
4.13.4. Special Audits 36

4.14. External Audits 36

4.15. Management Reviews 36
4.15.1. QA Reports to Management 36
4.15.2. Management Systems Review 37
4.15.3. Monthly QA Report and Metrics 37

5.0 Technical Requirements 38

5.1. Personnel 38
5.1.1. General 38
5.1.2. Training 39
5.1.3. Ethics Policy 40

5.2. Facilities 42

5.3. Test Methods 43
5.3.1. Method Selection 43
5.3.2. SOPs 45
5.3.3. Method Validation 47
5.3.4. Method Verification 47
5.3.5. Method Validation and Verification Activities 47
5.3.6. Data Review 49
5.3.7. Data Integrity and Security 51

5.4. Equipment 52
5.4.1. Equipment Operation 52
5.4.2. Equipment Maintenance 53
5.4.3. Equipment Verification and Calibration 53

5.5. Measurement Traceability 54
5.5.1. General 54
5.5.2. Reference Standards Traceability 54
5.5.3. Reagents 55

5.6. Sampling 55

5.7. Sample Handling, Transport, and Storage 55
5.7.1. General 55
5.7.2. Sample Identification and Traceability 56
5.7.3. Sub-sampling 57
5.7.4. Sample Preparation 57
5.7.5. Sample Disposal 57

5.8. Assuring the Quality of Test Results 57
5.8.1. Proficiency Testing 57

5.8.2. Control Samples 58
5.8.3. Calibration 58
5.8.4. Glassware Cleaning 58
5.8.5. Permitting Departures from Documented Procedure 58
5.8.6. Development of QC Criteria, Non-Specified in Method/Regulation 60

5.9. Project Reports 61
5.9.1. General 61
5.9.2. Project Report Content 61
5.9.3. Project Narrative 62
5.9.4. Subcontractor Test Results 62
5.9.5. Electronic Data Deliverables 63
5.9.6. Project Report Format 63

Tables

Table 1 STL Facility Locations 7
Table 2 Correlation of QMP Sections with NELAC Quality Manual Requirements 9
Table 3 Matrix Descriptions 13
Table 4 STL Record Types 32
Table 5 STL Record Retention 32
Table 6 Special Record Retention Requirements 33
Table 7 Audit Types and Frequency 34
Table 8 STL Employee Minimum Training Requirements 39
Table 9 STL Laboratory Square Footage 43
Table 10 Control Samples 59
Appendix List of Quality System Policies and Procedures 64

Figures

Figure 1 STL Organizational Chart 18
Figure 2 Monthly QA Report Format 37
Figure 3 Example Demonstration of Capability Certification Statement 40
Figure 4 STL Ethics Agreement 42
Figure 5 Proprietary Information Statement 46

SEVERN TRENT STL

Vision

STL will be the recognized industry leader for environmental analysis.

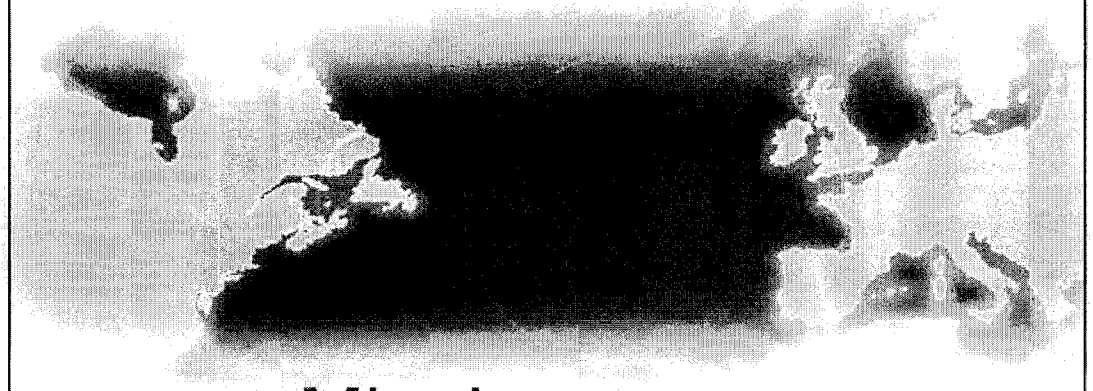

Mission

Through the innovation and dedication of our people, together with the quality of our systems, we will deliver levels of performance that delight our clients, retain the confidence of our stakeholders and enable the profitable growth of our business.

1. Introduction, Purpose, and Scope

1.1. Severn Trent Laboratories (STL) Overview

Severn Trent Laboratories (STL) is the largest environmental laboratory company in the world with revenues in excess of $200 million and 29 laboratory locations in 20 states nationwide. These facilities have the combined experience of over 500 years in the environmental testing business.

Through continued investment in facilities, equipment, methods and people, STL has developed an unprecedented team of resources, experience and capabilities. With over 2000 chemists, microbiologists and environmental scientists, STL is well positioned to support a variety of clients including commercial, governmental and chemical industries.

STL offers a broad range of environmental testing services provided by over two thousand professionals in the US. STL's testing capabilities include chemical, physical, and biological analyses of a variety of matrices, including aqueous, solid, drinking water, waste, tissue, air and saline/estuarine samples. Specialty capabilities include dioxin and furan analysis, air toxics, radiological testing, geotechnical testing, tissue preparation and analysis, aquatic toxicology, asbestos analysis, microscopy services, High Resolution Mass Spectrometry (HRMS), Inductively Coupled Plasma/MS (ICP/MS), Liquid Chromatography/MS (LC/MS), Mycology (mold and fungus), PCR microbiology, and on-site technologies including mobile laboratories. STL facility locations and contact information are outlined in Table 1.

1.2. Quality Assurance Policy

It is STL's policy to:

- Provide high quality, consistent, and objective environmental testing services that meet all federal, state, and municipal regulatory requirements.
- Generate data that are scientifically sound, legally defensible, meet project objectives, and are appropriate for their intended use.
- Provide STL clients with the highest level of professionalism and the best service practices in the industry.
- Build continuous improvement mechanisms into all laboratory, administrative, and managerial activities.
- Maintain a working environment that fosters open communication with both clients and staff and ensures data integrity.

Table 1 STL Facility Locations

STL Austin
14046 Summit Drive
Suite 111
Austin, TX 78728
Phone: 512-244-0855
Fax: 512-244-0160

STL Billerica
149 Rangeway Road
N. Billerica, MA 01862
Phone: 978-667-1400
Fax: 978-667-7871

STL Buffalo
10 Hazelwood Drive
Suite 106
Amherst, NY 14228
Phone: 716-691-2600
Fax: 716-691-7991

STL Burlington
208 South Park Drive
Suite 1
Colchester, VT 05446
Phone: 802-655-1203
Fax: 802-655-1248

STL Connecticut
128 Long Hill Cross Road
Shelton, CT 06484
Phone: 203-929-8140
Fax: 203-929-8142

STL Chicago
2417 Bond Street
University Park, IL 60466
Phone: 708-534-5200
Fax: 708-534-5211

STL Corpus Christi
1733 N. Padre Island Drive
Corpus Christi, TX 78408
Phone: 361-289-2673
Fax: 361-289-2471

STL Denver
4955 Yarrow Street
Arvada, CO 80002
Phone: 303-736-0100
Fax: 303-431-7171

STL Edison
777 New Durham Road
Edison, NJ 08817
Phone: 732-549-3900
Fax: 732-549-3679

STL Houston
6310 Rothway Drive
Suite 130
Houston, TX 77040
Phone: 713-690-4444
Fax: 713-690-5646

STL Knoxville
5815 Middlebrook Pike
Knoxville, TN 37921
Phone: 865-291-3000
Fax: 865-584-4315

STL Los Angeles
1721 South Grand Avenue
Santa Ana, CA 92705
Phone: 714-258-8610
Fax: 714-258-0921

STL Miami
10200 USA Today Way
Miramar, FL 33025
Phone: 954-431-4550
Fax: 954-431-1959

STL Mobile
900 Lakeside Drive
Mobile, AL 36693
Phone: 251-666-6633
Fax: 251-666-6696

STL Newburgh
315 Fullerton Avenue
Newburgh, NY 12550
Phone: 845-562-0890
Fax: 845-562-0841

STL North Canton
4101 Shuffel Drive NW
North Canton, OH 44720
Phone: 330-497-9396
Fax: 330-497-0772

STL On-Site Technology
Westfield Executive Park
53 Southampton Road
Westfield, MA 01085
Phone: 413-572-4000
Fax: 413-572-3707

STL Pensacola
3355 McLemore Drive
Pensacola, FL 32514
Phone: 850-474-1001
Fax: 850-478-2671

STL P&K
1936 Olney Ave.
Cherry Hill, NJ 08003
Phone: 856-489-4455
Fax: 856-489-4085

STL Pittsburgh
450 William Pitt Way
Building 6
Pittsburgh, PA 15238
Phone: 412-820-8380
Fax: 412-820-2080

STL Richland
2800 George Washington Way
Richland, WA 99352
Phone: 509-375-3131
Fax: 509-375-5590

STL Sacramento
880 Riverside Parkway
West Sacramento, CA 95605
Phone: 916-373-5600
Fax: 916-372-1059

STL San Francisco
1220 Quarry Lane
Pleasanton, CA 94566-4756
Phone: 925-484-1919
Fax: 925-484-1096

STL Seattle
5755 8th Street East
Tacoma, WA 98424
Phone: 253-922-2310
Fax: 253-922-5047

STL St. Louis
13715 Rider Trail North
Earth City, MO 63045
Phone: 314-298-8566
Fax: 314-298-8757

STL Savannah
5102 LaRoche Avenue
Savannah, GA 31404
Phone: 912-354-7858
Fax: 912-351-3673

STL Tallahassee
2846 Industrial Plaza Dr.
Tallahassee, FL 32301
Phone: 850-878-3994
Fax: 850-878-9504

STL Tampa
6712 Benjamin Road
Suite 100
Tampa, FL 33634
Phone: 813-885-7427
Fax: 813-885-7049

STL Valparaiso
2400 Cumberland Drive
Valparaiso, IN 46383
Phone: 219-464-2389
Fax: 219-462-2953

STL Westfield
Westfield Executive Park
53 Southampton Road
Westfield, MA 01085
Phone: 413-572-4000
Fax: 413-572-3707

1.3. Management Commitment to Quality Assurance

STL management is committed to providing the highest quality data and the best service in the environmental testing industry. To ensure that the data produced and reported by STL meet the requirements of its clients and comply with the letter and spirit of municipal, state and federal regulations, STL maintains a quality system that is clear, effective, well communicated, and supported at all levels in the company.

1.4. Purpose

The purpose of the Quality Management Plan (QMP) is to describe the STL quality system and to outline how that system enables all employees of STL to meet the Quality Assurance (QA) policy. The QMP also describes specific QA activities and requirements and prescribes their frequencies. Roles and responsibilities of management and laboratory staff in support of the quality system are also defined in the QMP.

1.5. Scope

The requirements set forth in this document are applicable to all STL facilities. Where the document uses the terms "must" and "shall", this denotes required activities. Practices described in this QMP denotes how those activities are performed in general; and each laboratory may have a more detailed description of that activity.

Each STL facility has the responsibility and authority to operate in compliance with regulatory requirements of the jurisdiction in which the work is performed. Where this QMP conflicts with those regulatory requirements, the regulatory requirements of the jurisdiction shall hold primacy. The facility's Laboratory Quality Manual (LQM) shall take precedence over the QMP in those cases. Secondarily, each STL facility has the responsibility and authority to operate in compliance with documented client requirements, where they do not conflict with regulatory requirements. STL shall not enter any client agreements that conflict with regulatory requirements in the jurisdiction in which the work is performed. Where documented client agreements conflict with this QMP, but meet the regulatory requirements of the jurisdiction in which the work is performed, the client agreements shall supercede requirements in this QMP.

STL operates under the regulations and guidelines of the following federal programs:

- Air Force Center for Environmental Excellence (AFCEE)
- US Army Corp of Engineers, Hazardous, Toxic and Radioactive Waste (USACE HTRW)
- Clean Air Act (CAA)
- Clean Water Act (CWA)
- Comprehensive Environmental Response, Compensation, and Liability Act (CERCLA)
- Department of Energy (DOE)
- Marine Protection, Research, and Sanctuaries Act (MPRSA)
- Navy Facilities Engineering Service Center (NFESC)
- National Pollutant, Discharge, and Elimination System (NPDES)
- Nuclear Regulatory Commission (NRC)
- Occupational Safety and Health Administration (OSHA)
- Resource Conservation and Recovery Act (RCRA)
- Safe Drinking Water Act (SDWA)
- Toxic Substances Control Act (TSCA)

STL also provides services under various state and local municipal guidelines. A listing of each laboratory's service offerings and certifications is presented on the MySTL webpage or available from the laboratory.

This QMP was written to comply with the National Environmental Laboratory Accreditation Conference (NELAC) standards. Refer to Table 2 for a cross-section comparison of this QMP to the NELAC standards.

Table 2 Correlation of QMP Sections with NELAC Quality Manual Requirements

NELAC Chapter 5.5.2 Quality Manual	Quality Management Plan Section
a. Quality policy statement, including objectives and commitments	1.2 Quality Assurance Policy 4.2.1 Objectives of the Quality System
b. Organization and management structure	4.1 Organization and Management
c. Relationship between management, technical operations, support services and the quality systems	4.1.2 Roles and Responsibilities 4.2 Quality System
d. Records retention procedures; document control procedures	4.3 Document Control 4.12.2 Record Retention
e. Job descriptions of key staff and references to job descriptions of other staff	4.1.2 Roles and Responsibilities
f. Identification of laboratory approved signatories	4.1 Organization and Management
g. Procedures for achieving traceability of measurements	5.5 Measurement Traceability
h. List of all test methods under which the laboratory performs its accredited testing	5.3.1 Method Selection

Table 2 Correlation of QMP Sections with NELAC Quality Manual Requirements

NELAC Chapter 5.5.2 Quality Manual	Quality Management Plan Section
i. Mechanisms for assuring the laboratory reviews all new work to ensure that it has the appropriate facilities and resources before commencing such work	4.4.2 Project-Specific Quality Planning
j. Reference to the calibration and/or verification test procedures used	5.4.3 Equipment Verification and Calibration
k. Procedures for handling submitted samples	4.7.1 Sample Acceptance Policy 5.7 Sample Handling, Transport and Storage
l. Reference to the major equipment and reference measurement standards used as well as the facilities and services used in conducting tests	4.1.1 Laboratory Facilities 5.4.2 Equipment Maintenance 5.4.3 Equipment Verification and Calibration
m. Reference to procedures for calibration, verification and maintenance of equipment	5.4.2 Equipment Maintenance 5.4.3 Equipment Verification and Calibration
n. Reference to verification practices including interlaboratory comparisons, proficiency testing programs, use of reference materials and internal QC schemes	5.8.1 Proficiency Testing 5.8.2 Control Samples
o. Procedures for feedback and corrective action whenever testing discrepancies are detected, or departures from documented procedures occur	4.9 Control of Non-Conformances 4.10 Corrective Action 4.11 Preventive Action 5.8.5 Permitting Departures from Documented Procedures
p. Laboratory management arrangements for exceptionally permitting departures from documented policies and procedures	4.4.2 Project-Specific Quality Planning 5.8.5 Permitting Departures from Documented Procedures
q. Procedures for dealing with complaints	4.8 Complaints
r. Procedures for protecting confidentiality and proprietary rights	4.7.2 Client Confidentiality and Proprietary Rights
s. Procedures for audits and data review	4.13 Internal Audits 4.14 External Audits 5.3.6 Data Reduction and Review
t. Process/procedures for establishing that personnel are adequately experienced in duties they are expected to carry out and are receiving any needed training	5.1.2 Training
u. Ethics policy statement developed by the laboratory and training personnel in their ethical & legal responsibilities	5.1.3 Ethics Policy
v. Reference to procedures for reporting analytical results	5.3.6 Data Review 5.9 Project Reports
w. Table of contents, listing reference, glossaries and appendices	TOC Table of Contents Appendix I: List of Cited SOPs and Work Instructions

2. References

The following references were used in preparation of this document and as the basis of the STL Quality System:

EPA Guidance for Preparing Standard Operating Procedures (SOPs) for Quality Related Documents, EPA QA/G-6, US EPA, Office of Environmental Information, March 2001.

EPA Requirements for Quality Management Plans, EPA QA/R-2, US EPA, Office of Environmental Information, March 2001.

EPA Requirements for Quality Assurance Project Plans, EPA QA/R-5, US EPA, Office of Environmental Information, March 2001.

EPA Quality Manual for Environmental Programs, 5360 A1, US EPA Office of Research and Development, National Center for Environmental Research and Quality Assurance, Quality Assurance Division, May 2000.

General Requirements for the Competence of Testing and Calibration Laboratories, ISO/IEC 17025, December 1999.

Good Automated Laboratory Practices, EPA 2185, August 1995.

Quality Assurance Project Plan, HQ Air Force Center for Environmental Excellence, Version 3.1, August 2001.

National Environmental Laboratory Accreditation Conference, Constitution, Bylaws, and Standards, EPA600/R-98/151, US EPA Office of Research and Development, July 1999.

Navy Installation Restoration Laboratory Quality Assurance Guide, Interim Guidance Document, Naval Facilities Engineering Service Center, February 1996.

Navy Installation Restoration Chemical Data Quality Manual, Navy IR CDQM, September 1999.

Quality Systems Manual for Environmental Laboratories, Department of Defense, Version 1, October 2000.

Shell for Analytical Chemistry Requirements, US Army Corps of Engineers, December 1998.

3. Terms and Definitions

Accuracy: the degree of agreement between a measurement and true or expected value, or between the average of a number of measurements and the true or expected value.

Audit: a systematic evaluation to determine the conformance to specifications of an operational function or activity.

Batch: environmental samples, which are prepared and/or analyzed together with the same process, using the same lot(s) of reagents. A preparation batch is composed of one to 20 environmental samples of a similar matrix, meeting the above mentioned criteria. Where no preparation method exists (example, volatile organics, water) the batch is defined as

environmental samples that are analyzed together with the same process and personnel, using the same lots of reagents, not to exceed 20 environmental samples. An analytical batch is composed of prepared environmental samples, extracts, digestates or concentrates that are analyzed together as a group. An analytical batch can include prepared samples originating from various environmental matrices and can exceed 20 samples.

Chain of Custody (COC): A system of documentation demonstrating the physical possession and traceability of samples.

Clean Air Act: legislation in 42 U.S.C. 7401 et seq., Public Law 91-604, 84 Stat. 1676 Pub. L. 95-95, 91 Stat., 685 and Pub. L. 95-190, 91 Stat., 1399, as amended.

Comprehensive Environmental Response, Compensation and Liability Act (CERCLA/Superfund): legislation (42 U.S.C. 9601-9675 et seq., as amended by the Superfund Amendments and reauthorization Act of 1986 (SARA), 42 U.S.C. 9601et seq.

Compromised Sample: a sample received in a condition that jeopardizes the integrity of the results. See Section 4.7.1 for a description of these conditions.

Confidential Business Information (CBI): information that an organization designates as having the potential of providing a competitor with inappropriate insight into its management, operation or products.

Confirmation: verification of the presence of a component using an additional analytical technique. These may include second column confirmation, alternate wavelength, derivatization, mass spectral interpretation, alternative detectors, or additional cleanup procedures.

Corrective Action: action taken to eliminate the causes of an existing non-conformance, defect or other undesirable situation in order to prevent recurrence.

Data Audit: a qualitative and quantitative evaluation of the documentation and procedures associated with environmental measurements to verify that the resulting data are of acceptable quality.

Demonstration of Capability (DOC): procedure to establish the ability to generate acceptable accuracy and precision.

Equipment Blank: a portion of the final rinse water used after decontamination of field equipment; also referred to as Rinsate Blank and Equipment Rinsate.

Document Control: the act of ensuring that documents (electronic or hardcopy and revisions thereto) are proposed, reviewed for accuracy, approved for release by authorized personnel, distributed properly and controlled to ensure use of the correct version at the location where the prescribed activity is performed.

Federal Insecticide, Fungicide and Rodenticide Act (FIFRA): legislation under 7 U.S.C. 135 et seq., as amended.

Federal Water Pollution Control Act (Clean Water Act, CWA): legislation under 33 U.S.C. 1251 et seq., Public Law 92-50086 Stat. 816.

Field Blank: a blank matrix brought to the field and exposed to field environmental conditions.

Field of Testing (FOT): a field of testing is based on NELAC's categorization of accreditation based on program, matrix, analyte.

Good Laboratory Practices (GLP): formal regulations for performing basic laboratory operations outlined in 40 CFR Part 160 and 40 CFR Part 729 and required for activities performed under FIFRA and TSCA.

Holding Time: the maximum time that a sample may be held before preparation and/or analysis as promulgated by regulation or as specified in a test method.

Instrument Blank: a blank matrix that is the same as the processed sample matrix (i.e. extract, digestate, condensate) and introduced onto the instrument for analysis.
Internal Chain of Custody: an unbroken trail of accountability that ensures the physical security of samples, data and records. Internal Chain of Custody refers to additional documentation procedures implemented within the laboratory that includes special sample storage requirements, and documentation of all signatures and/or initials, dates, and times of personnel handling specific samples or sample aliquots.

Instrument Detection Limit (IDL): the minimum amount of a substance that can be measured with a specified degree of confidence that the amount is greater than zero using a specific instrument. The IDL is associated with the instrumental portion of a specific method only, and sample preparation steps are not considered in its derivation. The IDL is a statistical estimation at a specified confidence interval of the concentration at which the relative uncertainty is ±100%. The IDL represents a range where qualitative detection occurs on a specific instrument. Quantitative results are not produced in this range.

Laboratory Control Sample (LCS): a blank matrix spiked with a known amount of analyte(s), processed simultaneously with, and under the same conditions as, samples through all steps of the analytical procedure.

Laboratory Quality Manual (LQM): a document stating the quality policy, quality system and quality practices of the laboratory. The LQM may include by reference other documentation relating to the laboratory's quality system.

Limit of Detection (LOD): the minimum amount of a substance that an analytical process can reliably detect.

Matrix: the substrate of a test sample. Common matrix descriptions are defined in Table 3.

Matrix Duplicate (MD): duplicate aliquot of a sample processed and analyzed independently; under the same laboratory conditions; also referred to as Sample Duplicate; Laboratory Duplicate.

Matrix Spike (MS): field sample to which a known amount of target analyte(s) is added.

Matrix Spike Duplicate (MSD): a replicate matrix spike.

Table 3 Matrix Descriptions

Matrix	Description
Air	Air samples as analyzed directly or as adsorbed into a solution or absorption matrix and desorbed.
Aqueous	Aqueous sample excluded from the definition of Drinking Water or Saline/Estuarine source. Includes surface water, groundwater and effluents.

Drinking Water	Aqueous sample that has been designated a potable water source.
Saline	Aqueous sample from an ocean or estuary, or other salt-water source such as the Great Salt Lake.
Liquid	Liquid with <15% settleable solids.
Solid	Soil, sediment, sludge or other matrices with ≥15% settleable solids.
Waste	A product or by-product of an industrial process that results in a matrix not previously defined.
Tissue	Sample of a biological origin such as fish tissue, shellfish, or plant material. Such samples shall be grouped according to origin.

Method Blank: a blank matrix processed simultaneously with, and under the same conditions as, samples through all steps of the analytical procedure.

Method Detection Limit (MDL): the minimum amount of a substance that can be measured with a specified degree of confidence that the amount is greater than zero using a specific measurement system. The MDL is a statistical estimation at a specified confidence interval of the concentration at which the relative uncertainty is ±100%. The MDL represents a range where qualitative detection occurs using a specific method. Quantitative results are not produced in this range.

Non-conformance: an indication, judgement, or state of not having met the requirements of the relevant specifications, contract, or regulation.

Precision: an estimate of variability. It is an estimate of agreement among individual measurements of the same physical or chemical property, under prescribed similar conditions.

Preservation: refrigeration and/or reagents added at the time of sample collection to maintain the chemical, physical and/or biological integrity of the sample.

Proficiency Testing: determination of the laboratory calibration or testing performance by means of inter-laboratory comparisons.

Proficiency Test (PT) Sample: a sample, the composition of which is unknown to the analyst, that is provided to test whether the analyst/laboratory can produce analytical results within specified performance limits. Also referred to as Performance Evaluation (PE) Sample.

Proprietary: belonging to a private person or company.

Quality Assurance (QA): an integrated system of activities involving planning, quality control, quality assessment, reporting and quality improvement to ensure that a product or service meets defined standards of quality with a stated level of confidence.

Quality Assurance Project Plan (QAPP): a formal document describing the detailed quality control procedures by which the quality requirements defined for the data and decisions pertaining to a specific project are to be achieved.

Quality Control (QC): the overall system of technical activities, the purpose of which is to measure and control the quality of a product or service.

Quality Control Sample: a control sample, generated at the laboratory or in the field, or obtained from an independent source, used to monitor a specific element in the sampling and/or testing process.

Quality Management Plan (QMP): a formal document describing the management policies, objectives, principles, organizational authority, responsibilities, accountability, and implementation plan of an agency, organization or laboratory to ensure the quality of its product and the utility of the product to its users.

Quality System: a structured and documented management system describing the policies, objectives, principles, organizational authority, responsibilities, accountability, and implementation plan of an organization for ensuring quality in its work processes, products (items), and services. The quality system provides the framework for planning, implementing, and assessing work performed by the organization and for carrying out required QA/QC.

Quantitation Limit (QL): the minimum amount of a substance that can be quantitatively measured with a specified degree of confidence and within the accuracy and precision guidelines of a specific measurement system. The QL can be based on the MDL, and is generally calculated as 3-5 times the MDL, however, there are analytical techniques and methods where this relationship is not applicable. Also referred to as Practical Quantitation Level (PQL), Estimated Quantitation Level (EQL), Limit of Quantitation (LOQ).

Raw Data: any original information from a measurement activity or study recorded in laboratory notebooks, worksheets, records, memoranda, notes, or exact copies thereof and that are necessary for the reconstruction and evaluation of the report of the activity or study. Raw data may include photography, microfilm or microfiche copies, computer printouts, magnetic/optical media, including dictated observations, and recorded data from automated instruments. Reports specifying inclusion of "raw data" do not need all of the above included, but sufficient information to create the reported data.

Record Retention: the systematic collection, indexing and storing of documented information under secure conditions.

Reference Standard: a standard, generally of the highest metrological quality available at a given location, from which measurements made at that location are derived.

Reporting Limit (RL): The level to which data is reported for a specific test method and/or sample. The RL is generally related to the QL. The RL must be minimally at or above the MDL.

Resource Conservation and Recovery Act (RCRA): legislation under 42 USC 321 et seq. (1976).

Safe Drinking Water Act (SDWA): legislation under 42 USC 300f et seq. (1974), (Public Law 93-523).

Sampling and Analysis Plan (SAP): a formal document describing the detailed sampling and analysis procedures for a specific project.

Selectivity: the capability of a measurement system to respond to a target substance or constituent.

Sensitivity: the difference in the amount or concentration of a substance that corresponds to the smallest difference in a response in a measurement system using a certain probability level.

Spike: a known amount of an analyte added to a blank, sample or sub-sample.

Standard Operating Procedure (SOP): a written document which details the method of an operation, analysis or action whose techniques and procedures are thoroughly prescribed and which is accepted as the method for performing certain routine or repetitive tasks.

Storage Blank: a blank matrix stored with field samples of a similar matrix.

Systems Audit: a thorough, systematic, on-site, qualitative review of the facilities, equipment, personnel, training, procedures, record keeping, data validation, data management, and reporting aspects of a total measurement system.

Test Method: defined technical procedure for performing a test.

Toxic Substances Control Act (TSCA): legislation under 15 USC 2601 et seq., (1976).

Traceability: the property of a result of a measurement that can be related to appropriate international or national standards through an unbroken chain of comparisons.

Trip Blank: a blank matrix placed in a sealed container at the laboratory that is shipped, held unopened in the field, and returned to the laboratory in the shipping container with the field samples.

Verification: confirmation by examination and provision of evidence against specified requirements.

4. Management Requirements

4.1. Organization and Management

4.1.1. Organization

STL's organizational structure is presented in Figure 1. Corporate employees are located at various STL facilities as outlined in the organizational structure. A QA Manager shall be designated at each STL facility.

4.1.2. Roles and Responsibilities

President and CEO
The President of STL, Inc. has overall management responsibility and authority for Severn Trent's laboratory division, including responsibility for budgeting, resource allocation, long term planning, sales, marketing, and final approval on all management and administrative policies and management plans. The President authorizes the QMP and as such, sets the standards for the quality system.

Senior Vice President and Chief Operating Officer (COO)
The COO is responsible for daily management of all STL facilities. The COO's responsibilities include allocation of personnel and resources, long term planning, and development of technical policies and management plans. The COO authorizes the QMP and is responsible for ensuring that business and technical operations are conducted in accordance with its requirements.

Vice President Client and Operations Services (VP COS)
The VP of Operations Services is responsible for all essential elements of offerings to clients, including risk management, legal compliance and contract administration, quality assurance, information technology, and environmental health and safety. The VP COS authorizes the QMP and responsibilities include authorization of Manuals, Policies and Procedures, providing support and direction to the Managers of these areas, and supporting the COO in decisions regarding long term planning, resource allocation, and capital expenditures

Corporate Quality Director
The QA Director is responsible for establishing, implementing and communicating STL's quality system. The QA Director monitors compliance with the QMP, provides regulatory and technical updates to

the STL facilities, assists in development of management plans and technical policies to be approved by the COO, and coordinates training within STL. The QA Director is available to any employee in STL to resolve data quality or ethical issues. The QA Director is independent of operational functions.

Figure 1 STL Organizational Chart

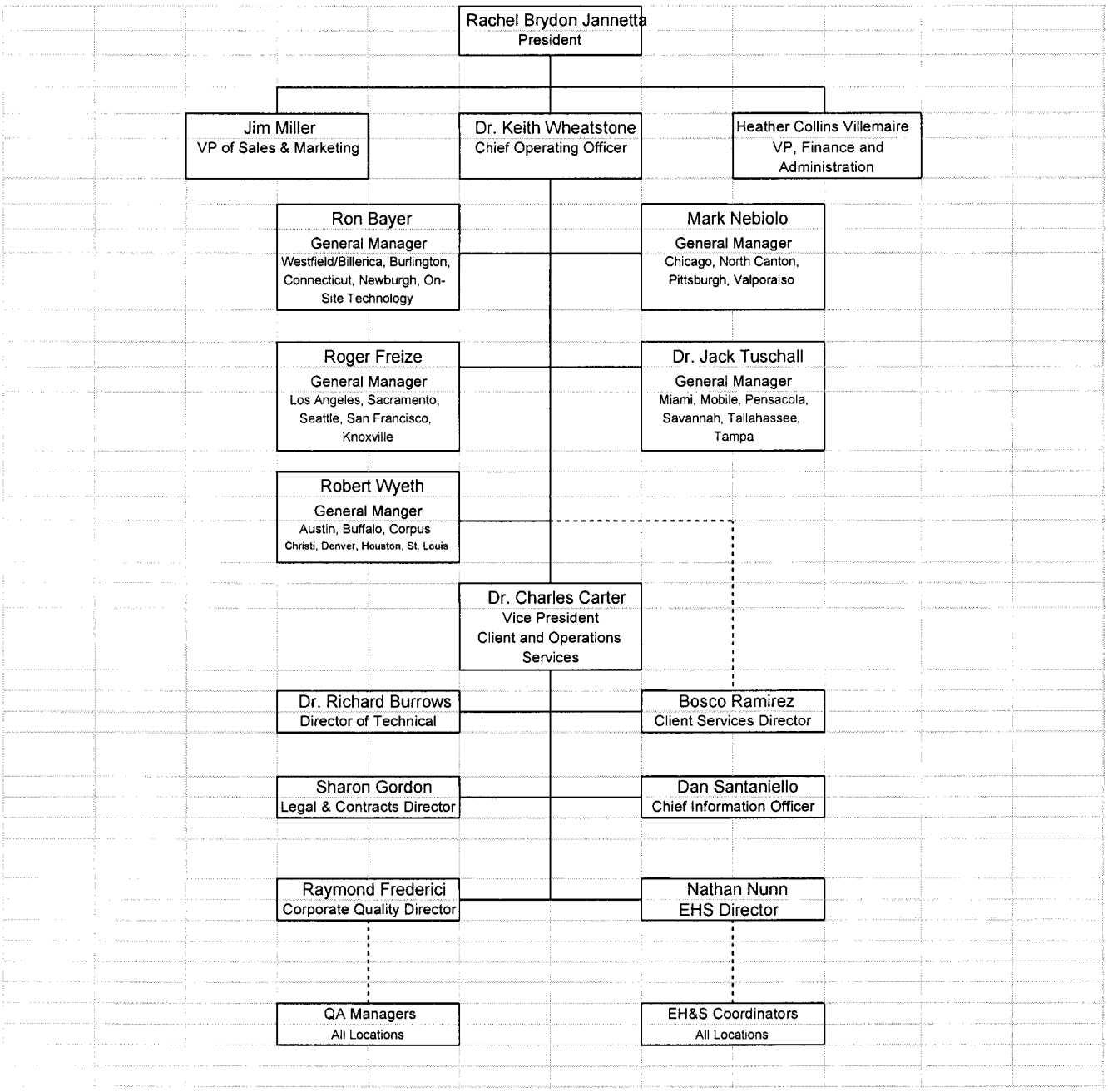

Director of Technical Services
The Director of Technical Services is responsible for establishing, implementing and communicating STL's Technical Policies, Standard Operating Procedures, and Manuals. Other responsibilities include conducting technical assessments as required, acting as a technical resource in national contracts review, coordinating new technologies, establishing best practices throughout STL, advising STL staff on technology advances, innovations, and applications, and organizing and running STL's technical committee.

Client Services Director
The Corporate Client Services Director is responsible for establishing, implementing and communicating STL's Client Services policies, guidelines and applicable Standard Operating Procedures. The Client Services Directors monitors overall client services indicators and compliance with the appropriate company policies and procedures. The Client Services Director is available to any laboratory to assist in addressing client services issues or to perform reviews and assessments of local client services systems. Other duties include identifying and establishing best client services practices, assisting in Project Management and Client Services training and coordinating STL's Client Service Managers' group.

Chief Information Officer (CIO)
The CIO is responsible for establishing, implementing and communicating STL's IT Policies, Standard Operating Procedures, and Manuals. Other responsibilities include coordinating new technologies, development of electronic communication tools such as STL's intranet and internet sites, ensuring data security and documentation of software, ensuring compliance with Good Automated Laboratory Practices (GALP), and assistance in establishing, updating, and maintaining Laboratory Information Management Systems (LIMS) at the various STL facilities.

Environmental Health and Safety (EH&S) Director
The EH&S Director is responsible for establishing, implementing and communicating STL's Environmental Health and Safety Policies, Standard Operating Procedures, and Manuals. Other responsibilities include conducting EH&S assessments as required, acting as a resource for all STL facilities to ensure EH&S compliance, coordinating safety committees, providing guidance to the EH&S Coordinator at various STL facilities, and advising STL facilities on new EH&S regulations.

General Manager (GM)
The GM is directly responsible for the daily operations of one or more operating facilities within STL. The GM's responsibilities include allocation of personnel and resources, long term planning, setting goals, and achieving the financial, business, and quality objectives of STL. The GM ensures timely compliance with corporate management directives, policies, and management systems reviews.

Laboratory Director
The Laboratory Director oversees the daily operations of the laboratory. The Laboratory Director's responsibilities include supervision of staff, setting goals and objectives for both the business and the employees, and achieving the financial, business, technical and quality objectives of the facility. The Laboratory Director ensures timely compliance with audits and corrective actions, and is responsible for maintaining a working environment which encourages open, constructive problem solving and continuous improvement.

QA Manager
The QA Manager is responsible for ensuring that the laboratory's quality system and LQM meet the requirements set forth in the QMP, providing quality systems training to all new personnel, maintaining a Laboratory Quality Manual (LQM), and performing or overseeing systems, data, special, and external audits. The QA Manager performs, or supervises, the maintenance of QA records, the maintenance of certifications and accreditations, the submission of monthly QA Reports, and assists in reviewing new work as needed. The QA Manager shall have the final authority to accept or reject data, and to stop work in progress in the event that procedures or practices compromise the validity and integrity of analytical data. The QA Manager is available to any employee at the facility to resolve data quality or ethical issues. The QA Manager shall be independent of laboratory operations. The facility QA Manager has an indirect reporting relationship to the QA Director. Each LQM has further descriptions of roles and responsibilities at the facility level.

Technical Director
The Technical Director(s) of a laboratory has overall responsibility for a defined portion of the technical operations of the laboratory, and may or may not be the Laboratory Director. The Technical Director solves day to day technical issues, provides technical training and guidance to staff, project managers, and clients, investigates technical issues identified by QA, and directs evaluation of new methods.

4.2. Quality System

4.2.1. Objectives of STL Quality System

The goal of the STL quality system is to ensure that business and technical operations are conducted with the highest standards of professionalism and ethics in the industry.

To achieve this goal, it is necessary to provide STL clients with not only scientifically sound, well documented, and regulatory compliant data, but also to ensure that STL provides the highest quality service available in the industry with uncompromising data integrity. A well-structured and well-communicated quality system is essential in meeting this goal. STL's quality system is designed to minimize systematic error, encourage constructive, documented problem solving, and provide a framework for continuous improvement within the organization.

The QMP is the basis for STL's quality and data integrity system. It contains requirements and general guidelines under which all STL facilities shall conduct their operations. A table listing the minimum quality system policies and procedures is appended to this QMP. The table includes a citation to the applicable QMP section where a procedure or policy is discussed. It also includes a column indicating the document "Reference".

4.2.2. Laboratory Quality Manual (LQM)

Each STL facility shall have an LQM that further describes the specific QA program at the laboratory.

Each STL facility's LQM shall address:

1. Table of Contents, lists of references and glossaries, and appendices.
2. Quality policy statement, including objectives and commitments, by facility management.
3. Organization and management structure of the laboratory, its place in the STL organization and relevant organizational charts.
4. Relationship between management, technical operations, support services and the quality system.
5. Record retention procedure.
6. Document control procedure.
7. Job descriptions of essential staff and reference to job descriptions of other staff.
8. Identification of the laboratory's approved signatories.

9. Procedure for achieving traceability of measurements.
10. List of test methods under which the laboratory performs its testing.
11. Procedure for reviewing new work.
12. Reference to the calibration and/or verification test procedures used.
13. Sample handling procedure.
14. Reference to the major equipment, reference standards, facilities and services used by the laboratory in conducting tests.
15. Reference to procedures for calibration, verification and maintenance of equipment.
16. Reference to verification practices including inter-laboratory comparisons, proficiency testing programs, use of reference materials and internal QC practices.
17. Procedures for feedback and corrective action when testing discrepancies are detected, or departures from policies and procedures occur.
18. Procedure for exceptionally permitting departures from documented policies and procedures or from standard specifications.
19. Procedure for handling client complaints.
20. Procedure for protecting client confidentiality and proprietary rights.
21. Procedure for audits and data review.
22. Procedure for establishing that personnel are adequately experienced and trained.
23. Reference to procedures for reporting analytical results.

4.3. Document Control

4.3.1. Document Type

The following documents, at a minimum, must be controlled at each STL Facility:

- Laboratory Quality Manual
- Standard Operating Procedures (SOP)
- Quality Management Plan

4.3.2. Document Control Procedure

Security and control of documents are necessary to ensure that confidential information is not distributed and that all current copies of a given document are from the latest applicable revision. Unambiguous identification of a controlled document is maintained by identification of the following items in the document header: Document Name, Document Number, Revision Number, Effective Date, Number of Pages. Controlled documents are authorized by Management and/or the QA Department. Controlled documents are marked as such and records of their distribution are kept by the QA Department. Document control maybe achieved by either electronic or hardcopy distribution.

Controlled documents shall be available at all locations where the operational activity described in the document is performed.

4.3.3. Document Revision

Quality system policies and procedures will be reviewed at a minimum of every two years and revised as appropriate. Changes to documents occur when a procedural change warrants a revision of the document. When an approved revision of a controlled document is ready for distribution, obsolete copies of the document shall be replaced with the current version of the document. The previous revision of the controlled document must be archived by the QA Department.

4.3.4. Official Documents

The STL Corporate Operations staff issues Corporate Manuals, Standard Operating Procedures, and Policies. These are collectively termed "Official Documents" and encompass the Policies and Procedures that all STL facilities are required to employ. A detailed description of the procedure for issuing, authorizing, controlling, distributing, and archiving Official Documents is found in Corporate SOP S-Q-001.

4.4. Request, Tender, and Contract Review

4.4.1. Contract Review

For many environmental sampling and analysis programs, testing design is site or program specific and does not necessarily "fit" into a standard laboratory service or product. It is STL's intent to provide both standard and customized environmental testing services to our clients. To ensure project success, technical staff shall perform a thorough review of technical and QC requirements contained in contracts. Contracts are reviewed for adequately defined requirements and STL's capability to meet those requirements.

Contract review shall include a review of the client's requirements in terms of compound lists, test methodology requested, sensitivity, accuracy, and precision requirements. The STL representative ensures that the laboratory's test methods are suitable to achieve these requirements and must ensure that the laboratory holds the appropriate certifications and approvals to perform the work. The review also includes the laboratory's capabilities in terms of turnaround time, capacity, and resources to provide the services

requested, as well the laboratory's ability to provide the documentation, whether hardcopy or electronic. If the laboratory cannot provide all services but intends to subcontract such services, whether to another STL facility or to an outside firm, this must be documented and discussed with the client prior to contract approval.

All contracts entered into by STL shall be reviewed and approved by the appropriate personnel at the facility or facilities performing the work. Any contract requirement or amendment to a contract communicated to STL verbally must be documented and confirmed with the client in writing. Any discrepancy between the client's requirements and STL's capability to meet those requirements is resolved in writing before acceptance of the contract. Contract amendments, initiated by the client and/or STL, are documented in writing for the benefit of both the client and STL.

All contracts, Quality Assurance Project Plans (QAPPs), Sampling and Analysis Plans (SAPs), contract amendments, and documented communications become part of the permanent project record as defined in Section 4.12.1.

4.4.2. Project Specific Quality Planning

Communication of contract specific technical and QC criteria is an essential activity in ensuring the success of site specific testing programs. To achieve this goal, STL assigns a Project Manager (PM) to each client. The PM is the first point of contact for the client. It is the PM's responsibility to ensure that project specific technical and QC requirements are effectively communicated to the laboratory personnel before and during the project.

Each STL facility shall have established project planning procedures in order to ensure that communication is inclusive and effective. These include project memos, designation and meetings of project teams, and meetings between the laboratory staff and the client. STL has found it very effective to invite the client into this process. STL strongly encourages our clients to visit the laboratories and hold formal or informal sessions with employees in order to effectively communicate ongoing client needs as well as project specific details for customized testing programs.

4.4.3. Data Quality Objectives

Data Quality Objectives (DQO) are qualitative and quantitative statements used to ensure the generation of the type, quantity, and

quality of environmental data that will be appropriate for the intended application. Typically, DQOs are identified before project initiation, during the development of QAPPs and SAPs. The analytical DQOs addressed in this section are precision, accuracy, representativeness, completeness, and comparability.

The components of analytical variability (uncertainty) can be estimated when QC samples of the right types and at the appropriate frequency are incorporated into measurement process at the analytical laboratory. STL incorporates numerous QC samples to obtain data for comparison with the analytical DQOs and to ensure that the measurement system is functioning properly. The QC samples and their applications, described in Section 5.8.2, are selected based on regulatory, method- or client-specific requirements. Analytical laboratory QC samples for inorganic, organic, and radionuclide analyses may include calibration blanks, instrument blanks, method blanks, LCS, calibration standards, MS, MSD, surrogate spikes, and yield monitors.

The DQOs discussed below ensure that data are gathered and presented in accordance with procedures appropriate for its intended use, that the data is of known and documented quality, and are able to withstand scientific and legal scrutiny.

Precision is an estimate of variability. It is an estimate of agreement among individual measurements of the same physical or chemical property, under prescribed similar conditions. Precision is expressed either as Relative Standard Deviation (RSD) for greater than two measurements or as Relative Percent Difference (RPD) for two measurements. Precision is determined, in part, by analyzing data from aggregate LCS results, MS, MSD, and MD. For radiochemical determinations, counting statistics can also provide an estimate of uncertainty.

Precision also refers to the measurement of the variability associated with the entire process, from sampling to analysis. Total precision of the process can be determined by analysis of duplicate or replicate field samples and measures variability introduced by both the laboratory and field operations.

Accuracy is the degree of agreement between a measurement and the true or expected value, or between the average of a number of measurements and the true or expected value. It reflects the total error associated with a measurement.

Both random and systematic errors can affect accuracy. For chemical properties, accuracy is expressed either as a percent recovery (R) or as a percent bias (R - 100). Accuracy is determined, in part, by analyzing data from LCS, MS, and MSD. For radiochemical determinations, counting statistics can also provide an estimate of uncertainty.

Representativeness is the degree to which data accurately and precisely represent a characteristic of a population, a variation in a physical or chemical property at a sampling point, or an environmental condition. Data representativeness is primarily a function of sampling strategy; therefore, the sampling scheme must be designed to maximize representativeness. Representativeness also relates to ensuring that, through sample homogeneity, the sample analysis result is representative of the constituent concentration in the sample matrix. STL makes every effort to analyze an aliquot that is representative of the original sample, and to ensure the homogeneity of the sample before sub-sampling.

Completeness is defined as the percentage of measurements that are judged valid or useable. Factors negatively affecting completeness include the following: sample leakage or breakage in transit or during handling, loss of sample during laboratory analysis through accident or improper handling, improper documentation such that traceability is compromised, or sample result is rejected due to failure to conform to QC specifications. A completeness objective of greater than 90% of the data specified by the statement of work is the goal established for most projects.

Comparability is a measure of the confidence with which one data set can be compared to another. To ensure comparability, all laboratory analysts are required to use uniform procedures (e.g., SOPs) and a uniform set of units and calculations for analyzing and reporting environmental data.

4.5. Subcontracting

Subcontracting must be arranged with the documented consent of the client, in a timely response which shall not be unreasonably refused. All QC guidelines specific to the client's analytical program are transmitted to the subcontractor and agreed upon before sending the samples to the subcontract facility. The originating laboratory shall obtain proof of certification from the subcontract facility, and retain in STL records. Where applicable, specific QC guidelines, QAPPs, and/or SAPs are

transmitted to the subcontract laboratory. Samples are subcontracted under formal Chain of Custody (COC).

Subcontract laboratories may receive an on-site audit by a representative of STL's QA staff if it is deemed appropriate by the QA Manager. The audit involves a measure of compliance with the required test method, QC requirements, as well as any special client requirements. The originating laboratory may also perform a paper audit of the subcontractor, which would entail reviewing the LQM, the last two PT studies, and a copy of any recent regulatory audits with the laboratory's responses.

Intra-company subcontracting may also occur between STL facilities. Intra-company subcontracting within STL must be arranged with the documented consent of the client, in a timely response which shall not be unreasonably refused. The originating laboratory is responsible for communicating all technical, quality, and deliverable requirements as well as other contract needs.

Project reports from both STL and external subcontractors are discussed in Section 5.9.4.

4.6. Purchasing Services and Supplies

Evaluation and selection of suppliers and vendors is done, in part, on the basis of the quality of their products, their ability to meet the demand for their products on a continuous and short term basis, the overall quality of their services, their past history, and competitive pricing. This is achieved through evaluation of objective evidence of quality furnished by the supplier, which can include certificates of analysis, recommendations, and proof of historical compliance with similar programs for other clients. To ensure that quality critical consumables and equipment conform to specified requirements, all purchases from specific vendors are approved by a member of the supervisory or management staff.

Chemical reagents, solvents, glassware, and general supplies are ordered as needed to maintain sufficient quantities on hand. Purchasing guidelines for equipment and reagents meet with the requirements of the specific method and testing procedures for which they are being purchased. Solvents and acids are pre-tested in accordance with the Testing Solvents and Acids procedure S-T-001.

4.7. Service to the Client

4.7.1. Sample Acceptance Policy

Each STL facility shall maintain a sample acceptance policy that describes compromised sample receipt. Samples shall be considered "compromised" if the following conditions are observed upon sample receipt:

- Cooler and/or samples are received outside of temperature specification.
- Samples are received broken or leaking.
- Samples are received beyond holding time.
- Samples are received without appropriate preservative.
- Samples are received in inappropriate containers.
- COC does not match samples received.
- COC is not properly completed or not received.
- Breakage of any Custody Seal.
- Apparent tampering with cooler and/or samples.
- Headspace in volatiles samples.
- Seepage of extraneous water or materials into samples.
- Inadequate sample volume.
- Illegible, impermanent, or non-unique sample labeling.

When "compromised" samples are received, it must be documented in the project records and the client must be contacted for instructions. If the client decides to proceed with analysis, the project report shall clearly indicate any of the above conditions and the resolution.

4.7.2. Client Confidentiality and Proprietary Rights

Data and sample materials provided by the client or at the client's request, and the results obtained by STL, shall be held in confidence (unless such information is generally available to the public or is in the public domain or client has failed to pay STL for all services rendered or is otherwise in breach of the terms and conditions set forth in the STL and client contract) subject to any disclosure required by law or legal process. STL's reports, and the data and information provided therein, are for the exclusive use and benefit of client, and are not released to a third party without written consent from the client.

4.8. Complaints

STL believes that an effective client complaint handling processes has important business and strategic value. Listening to and documenting client's concerns captures "client knowledge" that helps to continually improve processes and outpace the competition. Implementing a client complaint handling process also provides assurance to the data user that the laboratory will stand behind its data, service obligations and products.

Client complaints shall be documented, communicated to management, and addressed promptly and thoroughly. Client complaints are documented by the employee receiving the complaint. The documentation can take the form of a corrective action report (as described in Section 4.10) or in a format specifically designed for that purpose. The Laboratory Director, PM, Customer Service Manager, and QA Manager are informed of all client complaints, and assist in resolving the complaint.

The nature of the complaint is identified, documented, and investigated, and an appropriate action is determined and taken. In cases where a client complaint indicates that an established policy or procedure was not followed, the QA department is required to conduct a special audit to assist in resolving the issue. A written confirmation, or letter to the client, outlining the issue and response taken is strongly recommended as part of the overall action taken.

The number and nature of client complaints shall be reported to the QA Director in the QA Monthly report submitted by each facility. The overall number of complaints received per facility is tracked and the appropriateness of the response to client complaints is assessed. Monitoring and addressing the overall level and nature of client complaints and the effectiveness of the solutions is part of the Management Systems Review.

4.9. Control of Non-conformances

Each STL facility shall have a procedure to control and document non-conformances. Non-conformances include any out of control occurrence. Non-conformances may relate to client specific requirements, procedural requirements, or equipment issues. All non-conformances in the laboratory are documented at the time of their occurrence.

All non-conformances that affect a sample and/or sample data become part of the affected project's permanent record. When appropriate, reanalysis is performed where QC data falls outside of specifications, or where data appears anomalous. If the reanalysis comes back within established tolerances, the results are approved. If the reanalysis is still outside tolerances, further reanalysis or consultation with the Supervisor, Manager, PM, Laboratory Director, or QA Manager for direction may be required. All records of reanalysis are kept with the project files.

Where non-conformances specifically affect a client's sample and/or data, the client shall be informed and action must be taken. Action can take

the form of reporting and flagging the data, and including a description of the non-conformance in the project narrative or cover letter.

4.10. Corrective Action

4.10.1. General

Each STL facility shall maintain an established, documented corrective action process. Each corrective action is thoroughly investigated, and the investigation, outcome of the investigation, action taken, and follow-up is documented. Corrective action reports are reviewed, approved, and maintained by the QA department.

4.10.2. Initiation

Any employee in STL shall be authorized to initiate a corrective action. The initial source of corrective action can also be external to STL (i.e. corrective action because of client complaint, regulatory audit, or proficiency test). When a problem that requires corrective action is identified, the following items are identified by the initiator on the corrective action report: the nature of the problem, the name of the initiator, and the date. If the problem effects a specific client project, the name of the client and laboratory project number is recorded, and the PM is informed immediately.

4.10.3. Cause Analysis

The corrective action process must be embarked upon as a joint, problem solving, constructive effort. Identification of systematic errors, or errors that are likely to occur repetitively due to a defect or weakness in a system, is particularly valuable in maintaining an environment of continuous improvement in laboratory operations.

When a corrective action report is initiated, the initiator works with the affected employee(s) and/or department(s) to identify the root cause of the problem. An essential part of the corrective action process is to identify whether the problem occurred due to a systematic or isolated error.

If the initiator of the corrective action report is uncertain as to what would constitute appropriate corrective action or is unable to resolve the situation, the problem is identified to the Supervisor, Manager, Laboratory Director or the QA Manager who provides assistance in the corrective action process.

The root cause of the problem and associated cause analysis is documented on the corrective action form.

4.10.4. Corrective Action

Once the root cause of a problem is identified, the initiator and affected employee(s) and/or department(s) examine potential actions that will rectify the present problem to the extent possible, and prevent recurrence of future, similar occurrences. An appropriate corrective action is then recommended. The corrective action must be appropriate for the size and nature of the issue.

If the corrective action concerns a specific project related issue, the PM or Customer Service Manager approves the corrective action before its implementation.

Implementation of the corrective action and the date of implementation are documented on the corrective action report.

If a corrective action is related to a specific project report, it is included in the project file. An essential part of the corrective action process is communication and awareness of the problem, the cause, and the action taken to prevent future occurrences and/or rectify the immediate problem.

4.10.5. Monitoring Corrective Action

All corrective action reports are maintained by the QA Department. The QA department reviews all corrective actions and selects one or more of the more significant corrective actions for inclusion in the annual systems audit. The QA Department also may implement a special audit. The purpose of inclusion of the corrective action process in both routine and special audits is to monitor the implementation of the corrective action and to determine whether the action taken has been effective in overcoming the issue identified.

4.11. Preventative Action

Each STL facility shall maintain an established, documented preventative action process. Preventative action is defined as noting and correcting a problem before it happens, because of a weakness in a system, method, or procedure. Preventative action includes analysis of the quality system to detect, analyze, and eliminate potential causes of non-conformances. When potential problems are identified, preventative action is initiated to effectively address the problem to eliminate or reduce the risk identified.

4.12. Records

4.12.1. Record Types

Table 4 STL Record Types

Raw Data	Controlled Documents	QA Records	Project Records	Administrative Records
See Section 3. Terms and Definitions	LQM	Audits/ Responses	COC Documentation	Accounting
	QMP	Certifications	Contracts and Amendments	EH&S Manual, Permits, Disposal Records
	SOPs	Corrective Action	Correspondence	Employee Handbook
		Logbooks*	QAPP	Personnel files, Employee Signature & Initials, Training Records
		Method & Software Validation, Verification data	SAP	
		Standards Certificates	Telephone Logbooks	Technical and Administrative Policies

*Examples of Logbook types: Maintenance, Instrument Run, Preparation (standard and samples), Standard and Reagent Receipt, Archiving, Balance Calibration, Temperature.

4.12.2. Record Retention

Table 5 outlines STL's standard record retention time. For raw data and project records, record retention shall be calculated from the date the project report is issued. For other records, such as Controlled Documents, QC, or Administrative Records, the retention time is calculated from the date the record is formally retired. Records related to the programs listed in Table 6 have lengthier retention requirements and are subject to the requirements in Section 4.12.3.

Table 5 STL Record Retention

Record Type		Archival Requirement
Raw Data	All*	5 Years from analytical report issue
Controlled Documents	All*	5 Years from document retirement date
QA	All*	5 Years from archival
Project	All*	5 Years from analytical report issue
Administrative	Personnel/Training	7 years
	Accounting	See Accounting and Control Procedures Manual

* Exceptions listed in Table 6.

Table 6 Special Record Retention Requirements

Program	Retention Requirement
Colorado – Drinking Water	10 years
Commonwealth of MA – All environmental data 310 CMR 42.14	10 years
FIFRA – 40 CFR Part 160	Retain for life of research or marketing permit for pesticides regulated by EPA
Housing and Urban Development (HUD) Environmental Lead Testing	10 years
Louisiana – All	10 years
Michigan Department of Environmental Quality – all environmental data	10 years
Minnesota – Drinking Water	10 years
Navy Facilities Engineering Service Center (NFESC)	10 years
NY Potable Water NYCRR Part 55-2	10 years
OSHA - 29 CFR Part 1910	30 years
Pennsylvania – Drinking Water	10 years
TSCA - 40 CFR Part 792	10 years after publication of final test rule or negotiated test agreement

4.12.3. Programs with Longer Retention Requirements

Some regulatory programs have longer record retention requirements than the STL standard record retention time. These are detailed in Table 6 with their retention requirements. In these cases, the longer retention requirement must be implemented and noted in the archive or addressed in a facility specific records retention procedure. If special instructions exist such that client data cannot be destroyed prior to notification of the client, the container or box containing that data is marked as to who to contact for authorization prior to destroying the data.

4.12.4. Archives and Record Transfer

Archives must be indexed such that records are accessible on either a project or temporal basis. Archives are protected against fire, theft, loss, deterioration, and vermin. Electronic records are protected from deterioration caused by magnetic fields and/or electronic deterioration. Access to archives is controlled and documented. On-site and/or off-site facilities may be used.

STL ensures that all records are maintained as required by the regulatory guidelines and per the QMP upon facility location change or ownership transfer. Upon STL facility location change, all archives are retained by STL in accordance with the QMP. Upon ownership transfer, record retention requirements shall be addressed in the ownership transfer agreement and the responsibility for maintaining archives is clearly established.

4.13. Internal Audits

4.13.1. Audit Types and Frequency

A number of types of audits shall be performed at STL. Audit type and frequency are categorized in Table 7.

Table 7 Audit Types and Frequency

Audit Type	Performed by	Frequency
Systems	QA Department or Designee	Annual
Data	QA Department or designee	**Data Report Review:** As necessary to ensure an effective secondary review process
		Analyst Data Audits: 100% of all analysts annually
		Electronic Data Audits: 100% of all organic instruments
Special	QA Department or Designee	As Needed

4.13.2. Systems Audits

Facility systems audits are technical in nature and are conducted on an ongoing basis by the QA Manager or his/her designee at each facility. Systems audits cover all departments of the facility, both operational and support.

The audit report is issued by internal auditor within 30 calendar days of the audit. The audit report is addressed to the Laboratory Director, and copied to the General Manager. If the internal audit is performed by someone other than the facility's QA Manager, the report must also be addressed to the QA Manager.

Written audit responses are required within 30 calendar days of audit report issue. The audit response follows the format of the audit report, and corrective actions and time frames for their implementation are

included for each deficiency. The audit response is directed to all individuals copied on the audit report. Where a corrective action requires longer than 30 days to complete, the target date for the corrective action implementation is stated and evidence of the corrective action is submitted to the QA Department in the agreed upon time frame.

4.13.3. Data Audits

Data audits assess the level of customer service, SOP compliance, regulatory compliance, accuracy and completeness of test results and reports, documentation, and adherence to established QC criteria, laboratory SOPs, technical policy, and project specific QC criteria. Data Audits may be accomplished through electronic instrument data audits, analyst data authenticity audits or through final project report reviews.

Records of the data audits shall be kept, and the frequency of data audits shall be included in the monthly QA report. In performing data audits, it is essential that data be assessed in terms of differentiating between systematic and isolated errors. Upon noting anomalous data or occurrences in the data audits, the QA Department is responsible for seeking clarification from the appropriate personnel, ascertaining whether the error is systematic or an isolated error, and overseeing correction and/or revision of the project report if necessary. Errors found in client project reports are revised and the revision sent to the client. The QA Department is also responsible for assisting in the corrective action process where a data audit leads to identification of the need for process evaluation and change.

Where specific clients and regulatory programs require more frequent data auditing, the individual facility must meet the data auditing frequency for that program.

4.13.3.1. Data Authenticity Audits

Data authenticity audits shall be performed on 100% of all analysts by the QA department or a designee independent from the operations. Performing data authenticity checks will typically include verifying raw data, evaluating calculation tools and independently reproducing the final results and comparing it to the Hard copy on randomly selected batches of data. The laboratory will report the percentage of analysts reviewed (for the year) in their monthly QA report and should average about 8% per month.

4.13.3.2. Electronic Data Audits

Electronic data audits shall be performed on 100% of all organic instruments by the QA department or a designate independent from the operations. This may include Mint Miner® scanning of randomly selected batches of electronic data followed by a chromatography system review. The laboratory will report the percentage of instruments reviewed (for the year) in their monthly QA report and should average about 8% of instruments per month. Electronic data audits must include spot-checking of manual integrations by QA personnel in order to determine that the manual integration is appropriate and documented according to Section 5.3.6.

4.13.3.3. Final Report Reviews

The frequency of auditing final reports depends on the effectiveness of the laboratory's secondary review process. If the laboratory infrequently finds report errors or there is a low percentage of revised reports due to analytical error, audits may be less frequent.

4.13.4. Special Audits

Special audits are conducted on an as needed basis, generally as a follow up to specific issues such as client complaints, corrective actions, proficiency testing results, data audits, systems audits, validation comments, or regulatory audits. Special audits are focused on a specific issue, and report format, distribution, and timeframes are designed to address the nature of the issue.

4.14. External Audits

STL facilities are routinely audited by clients and external regulatory authorities. STL is available for these audits and makes every effort to provide the auditors with the personnel, documentation, and assistance required by the auditors. STL recommends that the audits be scheduled with the QA Department so that all necessary personnel are available on the day of the audit.

4.15. Management Reviews

4.15.1. QA Reports to Management

A monthly QA report shall be prepared by the QA Manager or their designee and forwarded to the Laboratory Director and the QA

Director. The reports include statistical results that are used to assess the effectiveness of the quality system. At a minimum, the contents of the monthly report is shown in Figure 2.

A Corporate QA Monthly Report containing a compilation of the Facility QA reports statistics, information on progress of the Corporate QA program, and a narrative outlining significant occurrences and/or concerns shall be prepared by the QA Director and forwarded to the General Manager of Operational and Technical Services and the COO.

4.15.2. Management Systems Review

Each STL facility shall perform a management quality system review annually in January in accordance with the corporate standard operating procedure. This will synchronize quality planning with fiscal year planning. The management quality system will assess the adequacy of the laboratory's quality system and plan any changes in laboratory organization, policies, practices, certifications, accreditations in order to achieve operational efficiencies, meet regulatory requirements and client expectations.

4.15.3. Monthly QA Report and Metrics

By the 3rd day of the month, each laboratory's Quality Manager will prepare a monthly QA report. The report will be sent to the Laboratory Director, General Manager and Corporate Quality Director. The report will contain a narrative summary and metrics spreadsheet. At a minimum, the report content will contain the items listed below. During the course of the year, the Lab Manager, General Manager or Corporate Quality Director may request that additional information be added to the report.

Figure 2 Monthly QA Report Format

1	**Audits**
	Internal System Audits External System Audits
2	**Revised reports/Client Feedback**
	Revised Reports Client Complaints Client Compliments
3	**Certification Changes**
	Changes Losses/revocations

4	**Proficiency Testing**
	Study participation and scores Combined PT scores Repeat failures
5	**SOP Status**
	Report the percentage of SOPs that have been revised or reviewed within the last 24 months
6	**Miscellaneous QA and Operational Issues**
	Narrative outlining improvements, regulatory compliance issues and general concerns
Appended	**Metrics Spreadsheet**
	Summarize metrics in the template provided by the Corporate Quality Director

5. Technical Requirements

5.1. Personnel

5.1.1. General

STL management believes that its highly qualified, ethical and professional staff are the single most important aspect in assuring the highest level of data quality and service in the industry.

STL staff consists of over two thousand professionals and support personnel that include the following positions:

- General Manager
- Customer Service Manager
- Quality Assurance Manager
- Laboratory Director
- Technical Director
- Laboratory Manager
- Department Supervisor
- Information Technology Manager
- Human Resources Manager
- Project Manager
- Department Manager
- Analyst
- Sample Custodian
- Technician
- Quality Assurance Specialist
- Data Review Specialist
- Information Technology Specialist

5.1.2. Training

STL is committed to furthering the professional and technical development of employees at all levels. Minimum training requirements for STL employees are outlined in Table 8.

Table 8 STL Employee Minimum Training Requirements

Required Training	Time Frame*	Employee Type
Environmental Health & Safety	Month 1	All
Ethics Data Integrity	Two Weeks Two Weeks	All Technical and PMs
Ethics Refresher	Annually	All
Quality Assurance	Quarter 1	All
Initial Demonstration of Capability (DOC)	Prior to unsupervised method performance	Technical

**From date of initial employment unless otherwise indicated.*

Technical training is accomplished within each laboratory by management to ensure method comprehension. All new personnel shall be required to demonstrate competency in performing a particular method by successfully completing a Demonstration of Capability (DOC) before conducting analysis independently on client samples.

DOCs are performed by analysis of four replicate QC samples. Results of successive LCS analyses can be used to fulfill the DOC requirement. The accuracy and precision, measured as average recovery and standard deviation (using n-1 as the population), of the 4 replicate results are calculated and compared to those in the test method (where available). If the test method does not include accuracy and precision requirements, the results are compared to target criteria set by the laboratory. The laboratory sets the target criteria such that they reflect the DQOs of the specific test method or project. A DOC Certification Statement is recorded and maintained in the employee's training or personnel file. Figure 3 shows an example of a DOC Certification Statement.

The following evidence must be on file at the laboratory for each technical employee:

- DOC.
- The employee has read and understood the latest version of the laboratory's quality documentation.
- The employee has read and understood the latest, approved version of all test methods and/or SOPs for which the employee is responsible.
- Annual evidence of continued DOC that may include successful analysis of a blind sample on the specific test method, or a similar test method, or an annual DOC, or four successive, successful LCS.
- An Ethics Agreement signed by each staff member (renewed each year)
- A confidentiality agreement signed by each staff member (renewed each year)

Figure 3 Example Demonstration of Capability Certification Statement

Demonstration of Capability
Certification Statement

Date: Matrix:
Laboratory Name: Method:
Laboratory Address:
Analyst Name:

We the undersigned certify that:

1. The analyst identified above, using the cited test method, which is in use at this facility for the analysis of samples under the National Environmental Laboratory Accreditation Program, has met the Demonstration of Capability.
2. The test method was performed by the analyst identified on this certification.
3. Copies of the test method and SOP are available for all personnel on site.
4. The data associated with the DOC are true, complete and representative.
5. All raw data (including a copy of this certification form) necessary to reconstruct and validate these analyses have been retained at the facility, and that the associated information is available for review by authorized inspectors.

Laboratory Manager/Supervisor Signature Date

5.1.3. Ethics Policy

Establishing and maintaining a high ethical standard is an important element of a quality system. In order to ensure that all personnel understand the importance the company places on maintaining high ethical standards at all times, STL has established an Ethics Policy P-L-006 and an Ethics Agreement (Figure 4). Each employee shall sign the Ethics Agreement, signifying agreed compliance with its stated

purpose. The ethics agreement is required to be re-signed on an annual basis.

Violations of this Ethics Policy will not be tolerated. Employees who violate this policy will be subject to disciplinary actions up to and including termination. Criminal violations may also be referred to the Government for prosecution. In addition, such actions could jeopardize the Company's ability to do work on Government contracts, and for that reason, the Company has a Zero Tolerance approach to such violations.

Ethics is also a major component of the STL's quality and data integrity systems. Each employee must be trained in ethics within two weeks of hire and quality training within three months of hire. Annually, ethics refresher training will be provided. Employees must be trained as to the legal and environmental repercussions that result from data misrepresentation. A data integrity hotline is maintained by STL and administered by the Corporate Quality Director.

Figure 4 STL Ethics Agreement

I understand that STL is committed to ensuring the highest standard of quality and integrity of the data and services provided to our clients. I have read the Ethics Policy of the Company.

With regard to the duties I perform and the data I report in connection with my employment at the Company, I agree that:

- I will not intentionally report data values that are not the actual values obtained;
- I will not intentionally report the dates, times, sample or QC identifications, or method citations of data analyses that are not the actual dates, times, sample or QC identifications, or method citations;
- I will not intentionally misrepresent another individual's work;
- I will not intentionally report data values that do not meet established quality control criteria as set forth in the Method and/or Standard Operating Procedures, or as defined by Company Policy;
- I agree to inform my Supervisor of any accidental reporting of non-authentic data by me in a timely manner; and I agree to inform my Supervisor of any accidental or intentional reporting of non-authentic data by other employees; and
- If a supervisor or a member of STL management requests me to engage in or perform an activity that I feel is compromising data validity or quality, I will not comply with the request and report this action immediately to a member of senior management, up to and including the President of STL.

As a STL employee, I understand that I have the responsibility to conduct myself with integrity in accordance with the ethical standards described in the Ethics Policy. I will also report any information relating to possible kickbacks or violations of the Procurement Integrity Act, or other questionable conduct in the course of sales or purchasing activities. I will not knowingly participate in any such activity and will report any actual or suspected violation of this policy to management.

The Ethics Policy has been explained to me by my supervisor or at a training session, and I have had the opportunity to ask questions if I did not understand any part of it. I understand that any violation of this policy subjects me to disciplinary action, which can include termination. In addition, I understand that any violation of this policy which relates to work under a government contract or subcontract could also subject me to the potential for prosecution under federal law.

EMPLOYEE SIGNATURE _____ Date _____

Supervisor/Trainer: _____ Date _____

5.2. Facilities

Each STL facility must be secure and access must be controlled and documented. Access is controlled by various measures including locked doors, passwords, electronic access cards, security codes, and staffed reception areas. All visitors sign in and are escorted by STL personnel while at an STL facility.

STL's facilities are designed for efficient, automated high-quality operations. All-laboratories are equipped with Heating, Ventilation, and Air Conditioning (HVAC) systems appropriate to the needs of environmental testing laboratories. Environmental conditions in the facilities, such as hood flow, are routinely monitored and documented. Table 9 summarizes the square footage at each STL facility.

All STL facilities are equipped with structural safety features. Each employee is familiar with the location, use, and capabilities of general and specialized safety features associated with their workplace. STL also provides and requires the use of protective equipment including safety glasses, protective clothing, gloves, respirators, etc.

Table 9 STL Laboratory Square Footage

Facility	Square Footage	Facility	Square Footage
STL Austin	43,000	STL Newburgh	8,000
STL Billerica	10,000	STL North Canton	53,000
STL Buffalo	32,000	STL Pensacola	18,000
STL Burlington	36,000	STL Pittsburgh	30,000
STL Chicago	51,000	STL P&K	30,000
STL Connecticut	17,000	STL Richland	33,000
STL Corpus Christi	12,000	STL Sacramento	66,000
STL Denver	54,000	STL Savannah	55,000
STL Edison	30,000	STL San Francisco	21,000
STL Houston	28,000	STL Seattle	15,000
STL Knoxville	29,000	STL St. Louis	31,000
STL Los Angeles	27,000	STL Tallahassee	22,000
STL Miami	9,000	STL Tampa	12,000
STL Mobile	14,000	STL Valparaiso	7,000
		STL Westfield	10,000

5.3. Test Methods

5.3.1. Method Selection

Most of the test methods performed at STL originate from test methods published by a regulatory agency such as the US EPA and other state and federal regulatory agencies. These include, but are not limited to, the following published compendiums of test methods:

CWA Methods (624, 608, ...) in 40CFR136 Appendix

A *Method 1664, Revision A: N-Hexane Extractable Material (HEM; Oil and Grease) and Silica Gel Treated N-Hexane Extractable Material (SGT-HEM); Non-polar Material) by Extraction and Gravimetry, EPA-821-R-98-002, February 1999*

Prescribed Procedures for Measurement of Radioactivity in Drinking Water, EPA-600/4-80-032, August 1980.

Eastern Environmental Radiation Facility Radiochemistry Procedures Manual, EPA, PB84-215581, June 1984.

HASL-300 28th Edition, Environmental Measurements Laboratory (EML), 1997.

Methods for Measuring the Acute Toxicity of Effluents and Receiving Waters to Freshwater and Marine Orrganisms, Fourth Edition, EPA/600/4-90/027F, August 1993.

Methods for Measuring the Acute Toxicity of Effluents and Receiving Waters to Freshwater and Marine Orrganisms, Fifth Edition, EPA-821-R-02-012, October 2002.

Short-Term Methods for Estimating the Chronic Toxicity of Effluents and Receiving Waters to Freshwater Organisms, Fourth Edition, EPA-821-R-02-013, October 2002.

Analytical Method for Determinationof Asbestos Fibers in Water, EPA-600/4-83, September 1983.

Determination of Asbestos Structures Over 10-mm in Length in Drinking Water, EPA-600/R-94-134, June 1994.

Compendium of Methods for the Determination of Toxic Organic Compounds in Ambient Air, US EPA, January 1996.

Guidelines Establishing Test Procedures for the Analysis of Pollutants Under the Clean Water Act, and Appendix A-C; 40 CFR Part 136, USEPA Office of Water.

Methods for Chemical Analysis of Water and Wastes, EPA 600 (4-79-020), 1983.

Methods for the Determination of Inorganic Substances in Environmental Samples, EPA-600/R-93/100, August 1993.

Methods for the Determination of Metals in Environmental Samples, EPA/600/4-91/010, June 1991. Supplement I: EPA-600/R-94/111, May 1994.

Methods for the Determination of Organic Compounds in Drinking Water, EPA-600/4-88-039, December 1988, Revised, July 1991, Supplement I, EPA-600-4-90-020, July 1990, Supplement II, EPA-600/R-92-129, August 1992.

NIOSH Manual of Analytical Methods, 4th ed., August 1994.

Statement of Work for Inorganics Analysis, ILM04.1, USEPA Contract Laboratory Program Multi-media, Multi-concentration.

Statement of Work for Organics Analysis, OLM04.2, USEPA Contract Laboratory Program, Multi-media, Multi-concentration.

Statement of Work for Organic Analysis, Multi-Media, Multi-Concentration, OLMO4.1, USEPA Contract Laboratory Program, September 1998.

Standard Methods for the Examination of Water and Wastewater, 18th/19th /20th edition; Eaton, A.D. Clesceri, L.S. Greenberg, A.E. Eds; American Water Works Association, Water Pollution Control Federation, American Public Health Association: Washington, D.C.

Test Methods for Evaluating Solid Waste Physical/Chemical Methods (SW846), Third Edition, September 1986, Final Update I, July 1992, Final Update IIA, August 1993, Final Update II, September 1994; Final Update IIB, January 1995; Final Update III, December 1996.

Annual Book of ASTM Standards, American Society for Testing & Materials (ASTM), Philadelphia, PA.

National Status and Trends Program, National Oceanographic and Atmospheric Administration, Volume I-IV, 1985-1994.

5.3.2. SOPs

Each STL facility shall maintain an SOP Index for both Method and Process SOPs. Method SOPs are maintained to describe a specific test method. Process SOPs are maintained to describe function and processes not related to a specific test method.

Method SOPs contain the following information:

Title Page with Document Name, Document Number, Revision Number, Effective Date, Page Numbers and Total # of Pages, Authorized Signatures, Dates and Proprietary Information Statement (Figure 5).

Identification of Test Method	Calibration and Standardization
Applicable Matrix	Procedure
Reporting Limit	Calculations
Scope and Application, including test analytes	Method Performance
Summary of the Test Method	Pollution Prevention
Definitions	Data Assessment and Acceptance Criteria for Quality Control Measures
Interferences	Corrective Actions for Out-of-Control Data
Safety	Contingencies for Handling Out-of-Control or Unacceptable Data
Equipment and Supplies	Waste Management
Reagents and Standards	References
Sample Collection, Preservation, Shipment and Storage	Tables, Diagrams, Flowcharts and Validation Data
Quality Control	

Process SOPs may contain the following information:
Title Page with Document Name, Document Number, Revision Number, Effective Date, Page Numbers and Total # of Pages, Authorized Signatures, Dates and Proprietary Information Statement (Figure 5).

1. Scope
2. Summary
3. Definitions
4. Responsibilities
5. Safety
6. Procedure
7. References
8. Tables, Diagrams, and Flowcharts

The QA Department is responsible for maintenance of SOPs, archival of SOP historical revisions, maintenance of an SOP index, and records of controlled distribution. SOPs, at a minimum, must undergo periodic review as described the each facility's LQM or SOP. Where an SOP is based on a published method, the laboratory must maintain a copy of the reference method.

Figure 5 Proprietary Information Statement

This documentation has been prepared by Severn Trent Laboratories (STL) solely for STL's own use and the use of STL's customers in evaluating its qualifications and capabilities in connection with a particular project. The user of this document agrees by its acceptance to return it to STL upon request and not to reproduce, copy, lend, or otherwise disclose its contents, directly or indirectly, and not to use if for any other purpose other than that for which it was specifically provided. The user also agrees that where consultants or other outside parties are involved in the evaluation process, access to these documents shall not be given to said parties unless those parties also specifically agree to these conditions.

THIS DOCUMENT CONTAINS VALUABLE CONFIDENTIAL AND PROPRIETARY INFORMATION. DISCLOSURE, USE OR REPRODUCTION OF THESE MATERIALS WITHOUT THE WRITTEN AUTHORIZATION OF SEVERN TRENT LABORATORIES IS STRICTLY PROHIBITED. THIS UNPUBLISHED WORK BY STL IS PROTECTED BY STATE AND FEDERAL LAW OF THE UNITED STATES. IF PUBLICATION OF THIS WORK SHOULD OCCUR THE FOLLOWING NOTICE SHALL APPLY: ©COPYRIGHT 2003 SEVERN TRENT LABORATORIES, INC. ALL RIGHTS RESERVED.

SOP Appendix

In some cases, a standard laboratory procedure is modified slightly for a specific client or project at the client or regulatory agency's request. In these cases, an Appendix to the SOP may be attached that indicates the modifications to the SOP which are specific to that project. SOP appendices shall not be used to alter test methods required by regulation such that the modifications would result in non-compliance with the regulation.

5.3.3. Method Validation

Laboratory developed methods are validated and documented according to the procedure described in Section 5.3.5.

5.3.4. Method Verification

Method verification is required when a validated standard test method or a method modification is implemented. The level of activity required for method verification is dependent on the type of method being implemented, or on the level of method modification and its affect on a method's robustness. Method modification often takes advantage of a method's robustness, or the ability to make minor changes in a method without affecting the method's outcome. Method verification may require some, but not all, of the activities described in Section 5.3.5.

5.3.5. Method Validation and Verification Activities

Before analyzing samples by a particular method, method validation and/or method verification must occur. A complete validation of the method is required for laboratory developed methods. While method validation can take various courses, the following activities can be required as part of method validation. Method validation records are designated QC records and are archived accordingly.

<u>Determination of Method Selectivity</u>
Method selectivity is demonstrated for the analyte(s) in the specific matrix or matrices. In some cases, to achieve the required selectivity for an analyte, a confirmation analysis is required as part of the method.

<u>Determination of Method Sensitivity</u>
Sensitivity can be both estimated and demonstrated. Whether a study is required to estimate sensitivity depends on the level of method development required when applying a particular measurement system to a specific set of samples. Where estimations and/or demonstrations of sensitivity are required by regulation or client agreement, such as the procedure in 40 CFR Part 136 Appendix B, under the Clean Water Act, these shall be followed. STL Facilities must document their approach to estimation and/or demonstration of sensitivity. Refer to the Method Detection Limits Study Procedure S-Q-003 for additional information.

Relationship of Limit of Detection (LOD) to the Quantitation Limit (QL)

Each laboratory shall have a procedure to relate the QL to the LOD (or MDL if appropriate). An important characteristic of expression of sensitivity is the difference in the LOD and the QL. The LOD is the minimum level at which the presence of an analyte can be reliably concluded. The QL is the minimum level at which both the presence of an analyte and its concentration can be reliably determined. For most instrumental measurement systems, there is a region where semi-quantitative data is generated around the LOD (both above and below the estimated MDL or LOD) and below the QL. In this region, detection of an analyte may be confirmed but quantification of the analyte is unreliable within the accuracy and precision guidelines of the measurement system. When an analyte is detected below the QL, and the presence of the analyte is confirmed by meeting the qualitative identification criteria for the analyte, the analyte can be reliably reported, but the amount of the analyte can only be estimated. If data is to be reported in this region, it must be done so with a qualification that denotes the semi-quantitative nature of the result.

Determination of Interferences
A determination that the method is free from interferences in a blank matrix is performed.

Determination of Range
Where appropriate, a determination of the applicable range of the method may be performed. In most cases, range is determined and demonstrated by comparison of the response of an analyte in a curve to established or targeted criteria. The curve is used to establish the range of quantitation and the lower and upper values of the curve represent upper and lower quantitation limits. Curves are not limited to linear relationships.

Demonstration of Capability
DOCs are performed prior to method performance.

Determination of Accuracy and Precision
Accuracy and precision studies are generally performed using replicate analyses, with a resulting percent recovery and measure of reproducibility (standard deviation, relative standard deviation) calculated and measured against a set of target criteria.

Documentation of Method
The method is formally documented in an SOP. If the method is a minor modification of a standard laboratory method that is already

documented in an SOP, an SOP Appendix describing the specific differences in the new method is acceptable in place of a separate SOP.

Continued Demonstration of Method Performance

Continued demonstration of Method Performance is addressed in the SOP. Continued demonstration of method performance is generally accomplished by batch specific QC samples such as LCS and Method Blanks.

5.3.6. Data Review

All data, regardless of regulatory program or level of reporting, shall be subject to a thorough review which involves a primary, secondary, and completeness review process. All levels of the review must be documented.

Primary Review

The primary review is often referred to as a "bench-level" review. In most cases, the analyst who generates the data (i.e. logs in, prepares and/or runs the samples) is the primary reviewer. In some cases, an analyst may be reducing data for samples run by an auto-sampler set up by a different analyst. In this case, the identity of both the analyst and the primary reviewer is identified in the raw data.

One of the most important aspects of primary review is to make sure that the test instructions are clear, and that all project specific requirements have been understood and followed.

Once an analysis is complete, the primary reviewer must ensure that:

- Sample preparation information is complete, accurate, and documented.
- Calculations have been performed correctly.
- Quantitation has been performed accurately.
- Qualitative identifications are accurate.
- Manual integrations are appropriate.
- Data flags to indicate manual integrations are recorded.
- Manual integrations are authorized by a date and signature or initials of primary analyst.
- Client specific requirements have been followed.
- Method and process SOPs have been followed.
- Method QC criteria have been met.
- QC samples are within established limits.
- Dilution factors are correctly recorded and applied.

- Non-conformances and/or anomalous data have been properly documented and appropriately communicated.
- COC procedures have been followed.
- Primary review is documented by date and initials/signature of primary analyst.

Any anomalous results and/or non-conformances noted during the Primary Review are communicated to the Supervisor and the PM for resolution. Resolution can require sample reanalysis, or it may require that data be reported with a qualification. Non-conformances are documented per Section 4.9.

Secondary Review

The secondary review shall be a complete technical review of a data set. The secondary review must be documented and the secondary reviewer identified. The following items are reviewed:

- Qualitative Identification
- Quantitative Accuracy
- Calibration
- QC Samples
- Method QC Criteria
- Adherence to method and process SOPs
- Accuracy of Final Client Reporting Forms
- Manual Integrations – Minimal requirement is to spot-check raw data files for manual integration, as verified by date and initials or signature of secondary data reviewer. Some regulatory programs require 100% secondary review of manual integrations.
- Completeness
- Special Requirements/Instructions

If problems are found during the secondary review, the reviewer must work with the appropriate personnel to resolve them. If changes are made to the data, such as alternate qualitative identifications, identifications of additional target analytes, re-quantitation, or re-integration, the secondary reviewer must contact the laboratory analyst and/or primary reviewer of the data so that the primary analyst and/or reviewer is aware of the appropriate reporting procedures.

Completeness Review

The completeness review shall include the generation of a project narrative and/or cover letter which outlines anomalous data and non-compliances using project narrative notes and non-compliance reports generated during the primary and secondary review. The completeness review addresses the following items:

- Is the project report complete?
- Does the data meet with the client's expectations?
- Were the data quality objectives of the project met?
- Are QC outages and/or non-conformances approved and appropriately explained in the narrative notes?

5.3.7. Data Integrity and Security

This section details those procedures that are relevant to computer systems that collect, analyze, and process raw instrumental data, and those that manage and report data.

Security and Traceability

Access to computer systems that collect, analyze, and process raw instrumental data, and those that manage and report data must be both controlled and recorded. There are various systems at STL to which this applies, which include the Laboratory Information Management System (LIMS), as well as specific systems such as chromatography data systems.

Control of the system is accomplished through limitation of access to the system by users with the education, training and experience to perform the task knowledgeably and accurately. System users are granted privileges that are commensurate with their experience and responsibilities.

Computer access is tracked by using unique login names and passwords for all employees that have access to the computer system. "General" or "multi-user" account access to computer systems that collect, analyze and process raw instrumental data, and those that manage and report data shall not be permitted. Entries and changes are documented with the identity of the individual making the entry, and the time and date. Where a computer system is processing raw instrumental data, the instrument identification number as described in Section 5.4.1 is recorded. Many of these systems have the capability of maintaining audit trails to track entries and changes to

the data. This function is activated on any computer system that has that capability.

Verification
All commercially obtained software shall be verified prior to use and after version upgrade. Verification involves assessing whether the computer system accurately performs its intended function. Verification generally is accomplished by comparing the output of the program with the output of the raw data manually processed, or processed by the software being replaced. The records of the verification are required to contain the following information: software vendor, name of product, version, comparison of program output and manual output, raw data used to verify the program, date, and name of the individual performing the verification. Records of verification are retained as QC records.

Validation
Software validation involves documentation of specifications and coding as well as verification of results. Software validation is performed on all in house programs. Records of validation include original specifications, identity of code, printout of code, software name, software version, name of individual writing the code, comparison of program output with specifications, and verification records as specified above. Records of validation are retained as QC records.

Auditing
The QA Department systems audit includes review of the control, security, and tracking of IT systems and software.

Version Control
The laboratory shall maintain copies of outdated versions of software and associated manuals for all software in use at the laboratory for a period of five years from its retirement date. The associated hardware, required to operate the software, must also be retained for the same time period.

5.4. Equipment

5.4.1. Equipment Operation

STL is committed to routinely updating and automating instrumentation. STL facilities maintain state of the art instrumentation to perform the analyses within the QC specifications of

the test methods. Each STL facility shall maintain an equipment list that must include the following information:

- Date Installed or year placed in service
- Manufacturer's Name, Model Number, Serial Number
- Current Location
- Preventative Maintenance Schedule

All equipment is subject to rigorous checks upon its receipt, upgrade, or modification to establish that the equipment meets with the selectivity, accuracy, and precision required by the test method for which it is to be used. All manufacturer's operations and maintenance manuals are kept up to date and accessible for the use of the equipment operator. Documentation of equipment usage is maintained using analytical run and maintenance logbooks.

5.4.2. Equipment Maintenance

Each STL facility must employ a system of preventative maintenance in order to ensure system up time, minimize corrective maintenance costs and ensure data validity. All routine maintenance is performed as recommended by the manufacturer and may be performed by an analyst, instrument specialist or outside technician. Maintenance logbooks are kept on all major pieces of equipment in which both routine and non-routine maintenance is recorded. Notation of the date and maintenance activity is recorded each time service procedures are performed. The return to analytical control following instrument repair is documented. Maintenance logbooks are retained as QA records.

Maintenance contracts are held on specific pieces of equipment where outside service is efficient, cost-effective, and necessary for effective operation of the laboratory.

5.4.3. Equipment Verification and Calibration

All equipment shall be tested upon receipt to establish its ability to meet the QC guidelines contained in the test method for which the instrumentation is to be used. This testing shall be documented. Once an instrument is placed in routine service, ongoing instrument calibration is demonstrated at the appropriate frequency as defined in the test method. Refer to the Selection of Calibration Points SOP, P-T-001 for guidance on using calibration data. Any instrument that is deemed to be malfunctioning is clearly marked and taken out of service. When the instrument is brought back into control, acceptable performance is documented.

5.5. Measurement Traceability

5.5.1. General

Traceability of measurements shall be assured using a system of documentation, calibration, and analysis of reference standards. Laboratory equipment that are peripheral to analysis and whose calibration is not necessarily documented in a test method analysis or by analysis of a reference standard shall be subject to ongoing certifications of accuracy. At a minimum, these must include procedures for checking specifications ancillary equipment: balances, thermometers, temperature, Deionized (DI) and Reverse Osmosis (RO) water systems, automatic pipettes and other volumetric measuring devices. With the exception of Class A Glassware (including glass microliter syringes that have a certificate of accuracy), quarterly accuracy checks are performed for all mechanical volumetric devices. Wherever possible, subsidiary or peripheral equipment is checked against standard equipment or standards that are traceable to national or international standards.

An external certified service engineer services laboratory balances on an annual basis. This service is documented on each balance with a signed and dated certification sticker. Balances calibrations are checked each day of use. All mercury thermometers are calibrated annually against a traceable reference thermometer. Temperature readings of ovens, refrigerators, and incubators are checked on each day of use.

Laboratory DI and RO water systems have documented preventative maintenance schedules and the conductivity of the water is recorded on each day of use.

5.5.2. Reference Standards Traceability

The receipt of all reference standards must be documented. References standards are labeled with a unique Standard Identification Number, date received, and the expiration date. All documentation received with the reference standard is retained as a QC record and references the Standard Identification Number.

All standards should be purchased with an accompanying Certificate of Analysis that documents the standard purity. If a standard cannot be purchased from a vendor that supplies a Certificate of Analysis, the purity of the standard is documented by analysis. The documentation

of standard purity is archived, and references the Standard Identification Number.

All efforts are made to purchase standards that are $\geq$ 97.0% purity. If this is not possible, the purity is used in performing standards calculations.

The accuracy of calibration standards is checked by comparison with a standard from a second source. In cases where a second standard manufacturer is not available, a different lot is acceptable for use as a second source. The appropriate Quality Control (QC) criteria for specific standards are defined in laboratory SOPs. In most cases, the analysis of an Initial Calibration Verification (ICV) or Laboratory Control Sample (LCS) is used as the second source confirmation.

5.5.3. Reagents

Reagents are, in general, required to be analytical reagent grade unless otherwise specified in method SOPs. Reagents must be at a minimum the purity required in the test method. The date of reagent receipt and the date the reagent was opened are documented.

5.6. Sampling

Sample representativeness and integrity are the foundations upon which meaningful analytical results rely. Where documented and approved SAPs and/or QAPPs are in place, they must be made available to the laboratory before sample receipt, and approved by laboratory management before sample receipt.

5.7. Sample Handling, Transport, and Storage

5.7.1. General

Chain of Custody (COC) can be established either when bottles are sent to the field, or at the time of sampling. STL can provide all of the necessary coolers, reagent water, sample containers, preservatives, sample labels, custody seals, COC forms, ice, and packing materials required to properly preserve, pack, and ship samples to the laboratory.

Samples are received at the laboratory by a designated sample custodian and a unique Laboratory Project Identification Number is assigned. The following information is recorded for each sample shipment: Client/Project Name, Date and Time of Laboratory Receipt,

Laboratory Project Number, and Signature or initials of the personnel receiving the cooler and making the entries.

Upon inspection of the cooler and custody seals, the sample custodian opens and inspects the contents of the cooler, and records the cooler temperature. If the cooler arrival temperature exceeds the required or method specified temperature range by $\pm 2^{\circ}C$ (for samples with a temperature requirement of $4^{\circ}C$, a cooler temperature of just above the water freezing temperature to $6^{\circ}C$ is acceptable); sample receipt is considered "compromised" and the procedure described in Section 4.7.1 is followed. All documents are immediately inspected to assure agreement between the test samples received and the COC.

Any non-conformance, irregularity, or compromised sample receipt as described in Section 4.7.1 must be documented and brought to the immediate attention of the client. The COC, shipping documents, documentation of any non-conformance, irregularity, or compromised sample receipt, record of client contact, and resulting instructions become part of the permanent project record.

Samples that are being tested at another STL facility or by an external subcontractor shall be appropriately packaged, and sent out under COC.

Following sample labeling as described in Section 5.7.2, the sample is placed in storage. Sample storage is required to be access controlled. All samples are stored according to the requirements outlined in the test method and in a manner such that they are not subject to cross contamination or contamination from their environment. Unless specified by method or state regulation, a tolerance range of $4 \pm 2^{\circ}C$ is used. Sample storage temperatures are monitored daily.

5.7.2. Sample Identification and Traceability

Each sample container shall be assigned a unique Sample Identification Number that is cross-referenced to the client identification number such that traceability of test samples is unambiguous and documented. Each sample container is affixed with a sample identification label.

All unused portions of samples, including empty sample containers, are returned to the secure sample control area.

5.7.3. Sub-sampling

Sample preparation procedures must be referenced in each STL facility's LQM and documented in the laboratory SOPs.

5.7.4. Sample Preparation

Sample preparation procedures must be referenced in each STL facility's LQM and documented in the laboratory SOPs.

5.7.5. Sample Disposal

Each facility shall have an SOP describing sample retention and disposal procedures. Samples should be retained in STL storage facilities for a minimum of 30 days after the project report is sent, however, provisions may be made for earlier disposal of samples once the holding time is exceeded. Some samples are required to be held for longer periods based on regulatory or client requirements (example, 60 days after project report is sent). The laboratory must follow the longer sample retention requirements where required by regulation or client agreement. Samples may be returned to the client per written request. Unused portions of samples found or suspected to be hazardous according to state or federal guidelines may be returned to the client upon completion of the analytical work.

Samples shall be disposed of in accordance with federal, state and local regulations. Each facility must have an SOP detailing the disposal of samples, digestates, and extracts. All Laboratories shall remove or deface sample labels prior to disposal unless this is accomplished through the disposal method (e.g., samples are incinerated).

5.8. Assuring the Quality of Test Results

5.8.1. Proficiency Testing

Each STL facility must analyze Proficiency Test (PT) samples as required for accreditation. As required by NELAC, each STL facility participates in the PT program semi-annually for each PT field of testing for which it is accredited, according to the NELAC PT field of testing published guidelines. Under SDWA, the laboratory also analyzes a PT sample by each method once per year, if the laboratory uses more than one method for the analyte.

In addition to the PT program required for NELAC accreditation, STL participates in a number of additional PT programs, as appropriate for the specific facility.

PT samples must be handled and tested in the same manner (procedural, equipment, staff) as environmental samples. PT test sample data is archived using the requirements for project and raw data record retention.

Each STL facility performing chemical analyses also participates in a double blind performance evaluation annually. An external vendor is contracted to submit double blind samples to the STL facility. Both the level of customer service and the accuracy of the test results are assessed objectively by the external contractor, who provides a detailed report to the QA Director and to each of the STL facilities. This is administered as a double blind program in order to assess all facets of STL operations.

5.8.2. Control Samples

Control samples are analyzed with each batch of samples to monitor laboratory performance in terms of accuracy, precision, sensitivity, selectivity, and interferences. Each regulatory program and each method within those programs specify the control samples that are prepared and/or analyzed with a specific batch. Control samples must be uniquely identified and correlated to unique batches. There are also a number of QC sample types that monitor field sampling accuracy, precision, representativeness, interferences, and the effect of the matrix on the method performed. Control Sample types and typical frequency of their application are outlined in Table 10. Note that frequency and use of control samples vary with specific regulatory, methodology and project specific criteria. Table 10 does not define STL's approach to application of QC samples for each regulatory program or test method.

5.8.3. Calibration

Each STL Facility must define calibration protocols in STL facility SOPs.

5.8.4. Glassware Cleaning

5.8.5. Permitting Departures from Documented Procedure

Each STL facility must have a procedure that defines the process, documentation, and level of authorization required to permit departures from documented procedures.

Table 10 Control Samples

Laboratory QC Sample Type	Use	Required Frequency
Laboratory Control Sample (Laboratory Fortified Blank)	Measures accuracy of method in blank matrix	1 per batch of 20 or less samples per matrix type per sample extraction or preparation method[1]
Method Blank	Measures method contribution to any source of contamination	1 per batch of 20 or less samples per matrix type per sample extraction or preparation method[1]
Instrument Blank	Measures instrumental contribution to any source of contamination	As specified in test method
Cleanup Blank	Measures clean up step contribution to any source of contamination	As specified in test method
Storage Blank	Measures storage contribution to any source of contamination (Volatiles only)	As specified in test method or SOP
Control, Brine Control, or Dilution Water	Measures effect of blank water on test organisms (Aquatic toxicology)	As specified in test method and permit
Reference Toxicant	Measure sensitivity of test organisms (Aquatic toxicology)	Annually
Field QC Sample Type	**Use**	Typical Frequency
Matrix Duplicate	Measures effect of site matrix on precision of method	Per 20 samples per matrix or per SAP/QAPP[1,2]
Matrix Spike	Measures effect of site matrix on accuracy of method	Per 20 samples per matrix or per SAP/QAPP[1]
Matrix Spike Duplicate	Measures effect of site matrix on precision of method	Per 20 samples per matrix or per SAP/QAPP[1,2]
Equipment Blank (Equipment Rinsate)	Measures field equipment contribution to any source of contamination	Per SAP/QAPP
Trip Blank	Measures shipping contribution to any source of contamination (Volatiles only)	Per Cooler
Field Blank	Measures field environment contribution to any source of contamination	Per SAP/QAPP
Field Duplicate	Measures representativeness of sampling and effect of site matrix on precision	Per SAP/QAPP

[1] Denotes an STL required frequency
[2] Either an MSD or an MD is required per 20 samples per matrix or per SAP/QAPP.

Where a departure from a documented SOP, test method, or policy is determined to be necessary, or unavoidable, the departure shall be documented and be authorized by the appropriate level of management, which is defined in the policy. In some instances, it is appropriate to inform the client before permitting a departure. Any such occurrence is documented in the cover letter and/or project narrative.

5.8.6. Development of QC Criteria, Non-Specified in Method/Regulation

Where a method or regulation does not specify acceptance and/or rejection criteria, the laboratory must develop a policy for doing so. The policy must address how the laboratory examines the data user's needs and the demonstrated sensitivity, accuracy and precision of the available test methods in determining appropriate QC criteria.

Data users often need the laboratory's best possible sensitivity, accuracy, and precision using a routinely offered test method, or are unsure of their objectives for the data. For routine test methods that are offered as part of STL's standard services, the laboratory bases the QC criteria on statistical information such as determination of sensitivity, historical accuracy and precision data, and method verification data. The method SOP includes QC criteria for ongoing demonstration that the established criteria are met (i.e., acceptable LCS accuracy ranges, precision requirements, method blank requirements, initial and continuing calibration criteria, etc.).

In some cases, a routine test method may be far more stringent than a specific data user's needs for a project. The laboratory may either use the routinely offered test method, or may opt to develop an alternate test method based on the data user's objectives for sensitivity, accuracy, and precision. In this case, it can be appropriate to base the QC criteria on the data user's objectives, and demonstrate through method verification and ongoing QC samples that these objectives are met.

For example, a client may require that the laboratory test for a single analyte with specific DQOs for sensitivity, accuracy, and precision as follows: Reporting Limit of 10 ppm, accuracy $\pm$25%, and RSD of less than 30%. The laboratory may opt to develop a method that meets these criteria and document through the Method blank results, MDL study, and LCS results that the method satisfies those objectives. In this case, both the method and the embedded QC criteria have been based on the client's DQOs.

In some cases, the data user needs more stringent sensitivity, accuracy, and/or precision than the laboratory can provide using a routine test method. In this case, it is appropriate that the laboratory provide documentation of the sensitivity, accuracy, and precision obtainable to the data user and let the data user determine whether to use the best available method offered by the laboratory, or determine whether method development or further research is required.

5.9. Project Reports

5.9.1. General

All STL Project reports that are generated under NELAC requirements must contain the content as described in Section 5.9.2. The criteria described in Section 5.9.3 and 5.9.4 apply to all Project Reports.

5.9.2. Project Report Content

- Title
- Laboratory name, address, telephone number, contact person
- Unique Laboratory Project Number
- Total Number of Pages (report must be paginated)
- Name and address of Client
- Client Project Name (if applicable)
- Laboratory Sample Identification
- Client Sample Identification
- Matrix and/or Description of Sample
- Dates: Sample Receipt, Collection, Preparation and/or Analysis Date
- Definition of Data Qualifiers
- Reporting Units
- Test Method

The following are required where applicable to the specific test method or matrix:

- Solid Samples: Indicate Dry or Wet Weight
- Whole Effluent Toxicity: Statistical package used
- If holding time < 48 hours, Sample Collection, Preparation and/or Analysis Time
- Indication by flagging where results are reported below the quantitation limit.

5.9.3. Project Narrative

A Project Narrative and/or Cover Letter shall be included with each project report and at a minimum includes an explanation of any and all of the following occurrences:

- Non-conformances
- "Compromised" sample receipt (see Section 4.7.1)
- Method Deviations
- QC criteria failures

Project Release

The Laboratory Director or his/her designee must authorize the release of the project report with a signature.

Where amendments to project reports are required after issue, these shall be in the form of a separate document and/or electronic data deliverable. The revised report is clearly identified as revised with the date of revision and the initials of the person making the revision. Specific pages of a project report may be revised using the above procedure with an accompanying cover letter indicating the page numbers of the project revised. The original version of the project report must be kept intact and the revisions and cover letter included in the project files.

5.9.4. Subcontractor Test Results

Project reports from external subcontract shall not be altered, and shall be included in original form in the final project report provided by STL. Data from subcontractors' reports may be added to an STL electronic deliverable.

Subcontracted data shall be clearly identified as such, and the name, and address of the laboratory performing the test shall be included in the project report. If the report is being generated under NELAC requirements, all information outlined in Section 5.9.2 are required for both the originating laboratory and the subcontracting laboratory.

Data subcontracted within STL may be reported on the originating laboratory's report forms provided the following mandatory requirements are met:

- The name, address, and telephone number of the facility are provided.
- Analytical results produced by the STL intra-company subcontractor are clearly identified as being produced by the subcontractor facility.
- The intra-company subcontractor's original report, including the chain of custody is retained by the originating laboratory.
- Proof of certification is retained by the originating laboratory.
- All information as outlined in Section 5.9.2 is included in the final report where the report is required to be compliant with NELAC, for both the originating and subcontracting laboratory.

5.9.5. Electronic Data Deliverables

Electronic Data Deliverables (EDD) are routinely offered as part of STL's services. STL offers a variety of EDD formats including Environmental Restoration Information Management System (ERPIMS), New Agency Standard (NAS), Format A, Excel, Dbase, GISKEY, and Text Files.

EDD specifications are submitted to the IT department by the PM for review and undergo the contract review process in Section 4.4.1. Once the facility has committed to providing diskettes in a specific format, the coding of the format may need to be performed. This coding is documented and validated. The validation of the code is retained as a QC record.

EDDs shall be subject to a review to ensure their accuracy and completeness. If EDD generation is automated, review may be reduced to periodic screening if the laboratory can demonstrate that it can routinely generate that EDD without errors. Any revisions to the EDD format must be reviewed until it is demonstrated that it can routinely be generated without errors.

5.9.6. Project Report Format

STL offers a wide range of project reporting formats, including EDDs, short report formats, and complete data deliverable packages modeled on the Contract Laboratory Protocol (CLP) guidelines. More information on the range of project reports available can be obtained by contacting any STL facility. Regardless of the level of reporting, all projects must undergo the levels of review as described in Section 5.3.6.

Appendix: List of Quality System Policies and Procedures

QMP Citation	Description	Reference
1.2	Quality Policy	QMP
4.4	Contract Review	QMP
4.4.2	Project Planning Process	LAB Procedure
4.7.1	Sample Acceptance Policy	LAB Procedure
4.5	Subcontracting	QMP
5.3.2	Approved SOP Listing	LAB Procedure
4.3.2	Document Control	S-Q-001 & Lab Procedure
4.12.2	Record Retention & Purging	QMP
4.6	Purchasing Services and Supplies	QMP
4.7.2	Client Confidentiality	QMP
4.8	Complaints	QMP
4.9	Document and Control of Non-conformances	LAB Procedure
4.10	Corrective Action process	LAB Procedure
4.15.2	Quality Systems Management Review	QMP
4.11	Preventive Action Process	LAB Procedure
4.12.4	Archives and Record Transfer	QMP
4.13	Internal Audits	QMP
4.15	Management Reviews	QMP
5.1.2	Training	QMP
5.1.3	Ethics Policy	P-L-006
5.3.2	SOP Index	LAB Procedure
5.3.5	Method Detection Limit Studies	S-Q-003
5.3.5	Relationship of Limit of Detection to Quantitation Limit	LAB Procedure
5.3.7	Data Integrity and Security	QMP
5.3.6	Data Review	QMP
5.4.1	Equipment Operation	QMP
5.4.1	Equipment Tracking List	LAB Procedure
5.4.2	Equipment Maintenance	QMP
5.4.3	Equipment Verification and Calibration	QMP
5.4.3	Selection of Calibration Points	P-T-001
5.5	Measurement Traceability	QMP
5.5.1	Procedures for Checking Specifications for Ancillary Equipment	LAB Procedure
5.5.2	Reference Standards Traceability	QMP
5.7	Sample Handling, Transport and Storage	QMP
5.7.2	Sample Identification and Traceability	QMP
5.7.3	Subsampling	QMP
5.7.4	Sample Preparation	QMP
5.7.5	Sample Disposal	LAB Procedure
5.8.3	Calibration	LAB Procedure
5.8.4	Glassware Cleaning Procedures	LAB Procedure
5.8.5	Permitting Departures From Documented Procedures	LAB Procedure
5.8.6	Development of QC Criteria, Non-specified in Methods/Regulations	QMP
5.9	Reporting Analytical Results	QMP

Note: Where "QMP" is referenced it indicates the policy or procedure is covered by the QMP and not covered by a corporate procedure, and it does not require a laboratory specific procedure. However, when QMP is listed, the laboratories' may still address it in more detail in their LQM or laboratory quality system procedures. When "LAB Procedure" is indicated, it requires the laboratory to address the item in its LQM or have a have a specific laboratory quality system policy or procedure for that item. Where a procedure number is listed, it refers to a corporate policy or procedure.

APPENDIX C

Compendium Method TO-15
Determination of VOCs in Air Collected in Specially-Prepared Canisters and Analyzed by GC/MS

EPA/625/R-96/010b

Compendium of Methods for the Determination of Toxic Organic Compounds in Ambient Air

Second Edition

Compendium Method TO-15

Determination Of Volatile Organic Compounds (VOCs) In Air Collected In Specially-Prepared Canisters And Analyzed By Gas Chromatography/ Mass Spectrometry (GC/MS)

Center for Environmental Research Information
Office of Research and Development
U.S. Environmental Protection Agency
Cincinnati, OH 45268

January 1999

Method TO-15
Acknowledgements

This Method was prepared for publication in the *Compendium of Methods for the Determination of Toxic Organic Compounds in Ambient Air, Second Edition* (EPA/625/R-96/010b), which was prepared under Contract No. 68-C3-0315, WA No. 3-10, by Midwest Research Institute (MRI), as a subcontractor to Eastern Research Group, Inc. (ERG), and under the sponsorship of the U.S. Environmental Protection Agency (EPA). Justice A. Manning, John O. Burckle, and Scott Hedges, Center for Environmental Research Information (CERI), and Frank F. McElroy, National Exposure Research Laboratory (NERL), all in the EPA Office of Research and Development, were responsible for overseeing the preparation of this method. Additional support was provided by other members of the Compendia Workgroup, which include:

- John O. Burckle, EPA, ORD, Cincinnati, OH
- James L. Cheney, Corps of Engineers, Omaha, NB
- Michael Davis, U.S. EPA, Region 7, KC, KS
- Joseph B. Elkins Jr., U.S. EPA, OAQPS, RTP, NC
- Robert G. Lewis, U.S. EPA, NERL, RTP, NC
- Justice A. Manning, U.S. EPA, ORD, Cincinnati, OH
- William A. McClenny, U.S. EPA, NERL, RTP, NC
- Frank F. McElroy, U.S. EPA, NERL, RTP, NC
- Heidi Schultz, ERG, Lexington, MA
- William T. "Jerry" Winberry, Jr., EnviroTech Solutions, Cary, NC

This Method is the result of the efforts of many individuals. Gratitude goes to each person involved in the preparation and review of this methodology.

Author(s)

- William A. McClenny, U.S. EPA, NERL, RTP, NC
- Michael W. Holdren, Battelle, Columbus, OH

Peer Reviewers

- Karen Oliver, ManTech, RTP, NC
- Jim Cheney, Corps of Engineers, Omaha, NB
- Elizabeth Almasi, Varian Chromatography Systems, Walnut Creek, CA
- Norm Kirshen, Varian Chromatography Systems, Walnut Creek, CA
- Richard Jesser, Graseby, Smyrna, GA
- Bill Taylor, Graseby, Smyrna, GA
- Lauren Drees, U.S. EPA, NRMRL, Cincinnati, OH

Finally, recognition is given to Frances Beyer, Lynn Kaufman, Debbie Bond, Cathy Whitaker, and Kathy Johnson of Midwest Research Institute's Administrative Services staff whose dedication and persistence during the development of this manuscript has enabled it's production.

DISCLAIMER

This Compendium has been subjected to the Agency's peer and administrative review, and it has been approved for publication as an EPA document. Mention of trade names or commercial products does not constitute endorsement or recommendation for use.

METHOD TO-15

Determination of Volatile Organic Compounds (VOCs) In Air Collected In Specially-Prepared Canisters And Analyzed By Gas Chromatography/ Mass Spectrometry (GC/MS)

TABLE OF CONTENTS

		Page
1.	Scope	15-1
2.	Summary of Method	15-2
3.	Significance	15-3
4.	Applicable Documents	15-4
	4.1 ASTM Standards	15-4
	4.2 EPA Documents	15-4
5.	Definitions	15-4
6.	Interferences and Contamination	15-6
7.	Apparatus and Reagents	15-6
	7.1 Sampling Apparatus	15-6
	7.2 Analytical Apparatus	15-8
	7.3 Calibration System and Manifold Apparatus	15-10
	7.4 Reagents	15-10
8.	Collection of Samples in Canisters	15-10
	8.1 Introduction	15-10
	8.2 Sampling System Description	15-11
	8.3 Sampling Procedure	15-12
	8.4 Cleaning and Certification Program	15-14
9.	GC/MS Analysis of Volatiles from Canisters	15-16
	9.1 Introduction	15-16
	9.2 Preparation of Standards	15-17
10.	GC/MS Operating Conditions	15-21
	10.1 Preconcentrator	15-21
	10.2 GC/MS System	15-22
	10.3 Analytical Sequence	15-22
	10.4 Instrument Performance Check	15-23
	10.5 Initial Calibration	15-23
	10.6 Daily Calibration	15-27
	10.7 Blank Analyses	15-27
	10.8 Sample Analysis	15-28

TABLE OF CONTENTS (continued)

Page

11. Requirements for Demonstrating Method Acceptability for VOC Analysis from Canisters 15-31
    11.1 Introduction 15-31
    11.2 Method Detection Limit 15-31
    11.3 Replicate Precision 15-31
    11.4 Audit Accuracy 15-32

12. References 15-32

METHOD TO-15

Determination of Volatile Organic Compounds (VOCs) In Air Collected In Specially-Prepared Canisters And Analyzed By Gas Chromatography/ Mass Spectrometry (GC/MS)

1. Scope

1.1 This method documents sampling and analytical procedures for the measurement of subsets of the 97 volatile organic compounds (VOCs) that are included in the 189 hazardous air pollutants (HAPs) listed in Title III of the Clean Air Act Amendments of 1990. VOCs are defined here as organic compounds having a vapor pressure greater than 10^{-1} Torr at 25°C and 760 mm Hg. Table 1 is the list of the target VOCs along with their CAS number, boiling point, vapor pressure and an indication of their membership in both the list of VOCs covered by Compendium Method TO-14A (1) and the list of VOCs in EPA's Contract Laboratory Program (CLP) document entitled: *Statement-of-Work (SOW) for the Analysis of Air Toxics from Superfund Sites (2)*.

Many of these compounds have been tested for stability in concentration when stored in specially-prepared canisters (see Section 8) under conditions typical of those encountered in routine ambient air analysis. The stability of these compounds under all possible conditions is not known. However, a model to predict compound losses due to physical adsorption of VOCs on canister walls and to dissolution of VOCs in water condensed in the canisters has been developed (3). Losses due to physical adsorption require only the establishment of equilibrium between the condensed and gas phases and are generally considered short term losses, (i.e., losses occurring over minutes to hours). Losses due to chemical reactions of the VOCs with cocollected ozone or other gas phase species also account for some short term losses. Chemical reactions between VOCs and substances inside the canister are generally assumed to cause the gradual decrease of concentration over time (i.e., long term losses over days to weeks). Loss mechanisms such as aqueous hydrolysis and biological degradation (4) also exist. No models are currently known to be available to estimate and characterize all these potential losses, although a number of experimental observations are referenced in Section 8. Some of the VOCs listed in Title III have short atmospheric lifetimes and may not be present except near sources.

1.2 This method applies to ambient concentrations of VOCs above 0.5 ppbv and typically requires VOC enrichment by concentrating up to one liter of a sample volume. The VOC concentration range for ambient air in many cases includes the concentration at which continuous exposure over a lifetime is estimated to constitute a 10^{-6} or higher lifetime risk of developing cancer in humans. Under circumstances in which many hazardous VOCs are present at 10^{-6} risk concentrations, the total risk may be significantly greater.

1.3 This method applies under most conditions encountered in sampling of ambient air into canisters. However, the composition of a gas mixture in a canister, under unique or unusual conditions, will change so that the sample is known not to be a true representation of the ambient air from which it was taken. For example, low humidity conditions in the sample may lead to losses of certain VOCs on the canister walls, losses that would not happen if the humidity were higher. If the canister is pressurized, then condensation of water from high humidity samples may cause fractional losses of water-soluble compounds. Since the canister surface area is limited, all gases are in competition for the available active sites. Hence an absolute storage stability cannot be assigned to a specific gas. Fortunately, under conditions of normal usage for sampling ambient air, most VOCs can be recovered from canisters near their original concentrations after storage times of up to thirty days (see Section 8).

1.4 Use of the Compendium Method TO-15 for many of the VOCs listed in Table 1 is likely to present two difficulties: (1) what calibration standard to use for establishing a basis for testing and quantitation, and (2) how

to obtain an audit standard. In certain cases a chemical similarity exists between a thoroughly tested compound and others on the Title III list. In this case, what works for one is likely to work for the other in terms of making standards. However, this is not always the case and some compound standards will be troublesome. The reader is referred to the Section 9.2 on standards for guidance. Calibration of compounds such as formaldehyde, diazomethane, and many of the others represents a challenge.

1.5 Compendium Method TO-15 should be considered for use when a subset of the 97 Title III VOCs constitute the target list. Typical situations involve ambient air testing associated with the permitting procedures for emission sources. In this case sampling and analysis of VOCs is performed to determine the impact of dispersing source emissions in the surrounding areas. Other important applications are prevalence and trend monitoring for hazardous VOCs in urban areas and risk assessments downwind of industrialized or source-impacted areas.

1.6 Solid adsorbents can be used in lieu of canisters for sampling of VOCs, provided the solid adsorbent packings, usually multisorbent packings in metal or glass tubes, can meet the performance criteria specified in Compendium Method TO-17 which specifically addresses the use of multisorbent packings. The two sample collection techniques are different but become the same upon movement of the sample from the collection medium (canister or multisorbent tubes) onto the sample concentrator. Sample collection directly from the atmosphere by automated gas chromatographs can be used in lieu of collection in canisters or on solid adsorbents.

2. Summary of Method

2.1 The atmosphere is sampled by introduction of air into a specially-prepared stainless steel canister. Both subatmospheric pressure and pressurized sampling modes use an initially evacuated canister. A pump ventilated sampling line is used during sample collection with most commercially available samplers. Pressurized sampling requires an additional pump to provide positive pressure to the sample canister. A sample of air is drawn through a sampling train comprised of components that regulate the rate and duration of sampling into the pre-evacuated and passivated canister.

2.2 After the air sample is collected, the canister valve is closed, an identification tag is attached to the canister, and the canister is transported to the laboratory for analysis.

2.3 Upon receipt at the laboratory, the canister tag data is recorded and the canister is stored until analysis. Storage times of up to thirty days have been demonstrated for many of the VOCs (5).

2.4 To analyze the sample, a known volume of sample is directed from the canister through a solid multisorbent concentrator. A portion of the water vapor in the sample breaks through the concentrator during sampling, to a degree depending on the multisorbent composition, duration of sampling, and other factors. Water content of the sample can be further reduced by dry purging the concentrator with helium while retaining target compounds. After the concentration and drying steps are completed, the VOCs are thermally desorbed, entrained in a carrier gas stream, and then focused in a small volume by trapping on a reduced temperature trap or small volume multisorbent trap. The sample is then released by thermal desorption and carried onto a gas chromatographic column for separation.

As a simple alternative to the multisorbent/dry purge water management technique, the amount of water vapor in the sample can be reduced below any threshold for affecting the proper operation of the analytical system by

reducing the sample size. For example, a small sample can be concentrated on a cold trap and released directly to the gas chromatographic column. The reduction in sample volume may require an enhancement of detector sensitivity.

Other water management approaches are also acceptable as long as their use does not compromise the attainment of the performance criteria listed in Section 11. A listing of some commercial water management systems is provided in Appendix A. One of the alternative ways to dry the sample is to separate VOCs from condensate on a low temperature trap by heating and purging the trap.

2.5 The analytical strategy for Compendium Method TO-15 involves using a high resolution gas chromatograph (GC) coupled to a mass spectrometer. If the mass spectrometer is a linear quadrupole system, it is operated either by continuously scanning a wide range of mass to charge ratios (SCAN mode) or by monitoring select ion monitoring mode (SIM) of compounds on the target list. If the mass spectrometer is based on a standard ion trap design, only a scanning mode is used (note however, that the Selected Ion Storage (SIS) mode for the ion trap has features of the SIM mode). Mass spectra for individual peaks in the total ion chromatogram are examined with respect to the fragmentation pattern of ions corresponding to various VOCs including the intensity of primary and secondary ions. The fragmentation pattern is compared with stored spectra taken under similar conditions, in order to identify the compound. For any given compound, the intensity of the primary fragment is compared with the system response to the primary fragment for known amounts of the compound. This establishes the compound concentration that exists in the sample.

Mass spectrometry is considered a more definitive identification technique than single specific detectors such as flame ionization detector (FID), electron capture detector (ECD), photoionization detector (PID), or a multidetector arrangement of these (see discussion in Compendium Method TO-14A). The use of both gas chromatographic retention time and the generally unique mass fragmentation patterns reduce the chances for misidentification. If the technique is supported by a comprehensive mass spectral database and a knowledgeable operator, then the correct identification and quantification of VOCs is further enhanced.

3. Significance

3.1 Compendium Method TO-15 is significant in that it extends the Compendium Method TO-14A description for using canister-based sampling and gas chromatographic analysis in the following ways:

- Compendium Method TO-15 incorporates a multisorbent/dry purge technique or equivalent (see Appendix A) for water management thereby addressing a more extensive set of compounds (the VOCs mentioned in Title III of the CAAA of 1990) than addressed by Compendium Method TO-14A. Compendium Method TO-14A approach to water management alters the structure or reduces the sample stream concentration of some VOCs, especially water-soluble VOCs.
- Compendium Method TO-15 uses the GC/MS technique as the only means to identify and quantitate target compounds. The GC/MS approach provides a more scientifically-defensible detection scheme which is generally more desirable than the use of single or even multiple specific detectors.
- In addition, Compendium Method TO-15 establishes method performance criteria for acceptance of data, allowing the use of alternate but equivalent sampling and analytical equipment. There are several new and viable commercial approaches for water management as noted in Appendix A of this method on which to base a VOC monitoring technique as well as other approaches to sampling (i.e., autoGCs and solid

adsorbents) that are often used. This method lists performance criteria that these alternatives must meet to be acceptable alternatives for monitoring ambient VOCs.

- Finally, Compendium Method TO-15 includes enhanced provisions for inherent quality control. The method uses internal analytical standards and frequent verification of analytical system performance to assure control of the analytical system. This more formal and better documented approach to quality control guarantees a higher percentage of good data.

3.2 With these features, Compendium Method TO-15 is a more general yet better defined method for VOCs than Compendium Method TO-14A. As such, the method can be applied with a higher confidence to reduce the uncertainty in risk assessments in environments where the hazardous volatile gases listed in the Title III of the Clean Air Act Amendments of 1990 are being monitored. An emphasis on risk assessments for human health and effects on the ecology is a current goal for the U.S. EPA.

4. Applicable Documents

4.1 ASTM Standards

- **Method D1356** *Definitions of Terms Relating to Atmospheric Sampling and Analysis*.
- **Method E260** *Recommended Practice for General Gas Chromatography Procedures*.
- **Method E355** *Practice for Gas Chromatography Terms and Relationships*.
- **Method D5466** *Standard Test Method of Determination of Volatile Organic Compounds in Atmospheres (Canister Sampling Methodology)*.

4.2 EPA Documents

- *Quality Assurance Handbook for Air Pollution Measurement Systems, Volume II*, U. S. Environmental Protection Agency, EPA-600/R-94-038b, May 1994.
- *Technical Assistance Document for Sampling and Analysis of Toxic Organic Compounds in Ambient Air*, U. S. Environmental Protection Agency, EPA-600/4-83-027, June 1983.
- *Compendium of Methods for the Determination of Toxic Organic Compounds in Ambient Air: Method TO-14, Second Supplement*, U. S. Environmental Protection Agency, EPA-600/4-89-018, March 1989.
- *Statement-of-Work (SOW) for the Analysis of Air Toxics from Superfund Sites*, U. S. Environmental Protection Agency, Office of Solid Waste, Washington, D.C., Draft Report, June 1990.
- *Clean Air Act Amendments of 1990*, U. S. Congress, Washington, D.C., November 1990.

5. Definitions

[Note: Definitions used in this document and any user-prepared standard operating procedures (SOPs) should be consistent with ASTM Methods D1356, E260, and E355. Aside from the definitions given below, all pertinent abbreviations and symbols are defined within this document at point of use.]

5.1 Gauge Pressure—pressure measured with reference to the surrounding atmospheric pressure, usually expressed in units of kPa or psi. Zero gauge pressure is equal to atmospheric (barometric) pressure.

5.2 Absolute Pressure—pressure measured with reference to absolute zero pressure, usually expressed in units of kPa, or psi.

5.3 Cryogen—a refrigerant used to obtain sub-ambient temperatures in the VOC concentrator and/or on front of the analytical column. Typical cryogens are liquid nitrogen (bp -195.8°C), liquid argon (bp -185.7°C), and liquid CO_2 (bp -79.5°C).

5.4 Dynamic Calibration—calibration of an analytical system using calibration gas standard concentrations in a form identical or very similar to the samples to be analyzed and by introducing such standards into the inlet of the sampling or analytical system from a manifold through which the gas standards are flowing.

5.5 Dynamic Dilution—means of preparing calibration mixtures in which standard gas(es) from pressurized cylinders are continuously blended with humidified zero air in a manifold so that a flowing stream of calibration mixture is available at the inlet of the analytical system.

5.6 MS-SCAN—mass spectrometric mode of operation in which the gas chromatograph (GC) is coupled to a mass spectrometer (MS) programmed to SCAN all ions repeatedly over a specified mass range.

5.7 MS-SIM—mass spectrometric mode of operation in which the GC is coupled to a MS that is programmed to scan a selected number of ions repeatedly [i.e., selected ion monitoring (SIM) mode].

5.8 Qualitative Accuracy—the degree of measurement accuracy required to correctly identify compounds with an analytical system.

5.9 Quantitative Accuracy—the degree of measurement accuracy required to correctly measure the concentration of an identified compound with an analytical system with known uncertainty.

5.10 Replicate Precision—precision determined from two canisters filled from the same air mass over the same time period and determined as the absolute value of the difference between the analyses of canisters divided by their average value and expressed as a percentage (see Section 11 for performance criteria for replicate precision).

5.11 Duplicate Precision—precision determined from the analysis of two samples taken from the same canister. The duplicate precision is determined as the absolute value of the difference between the canister analyses divided by their average value and expressed as a percentage.

5.12 Audit Accuracy—the difference between the analysis of a sample provided in an audit canister and the nominal value as determined by the audit authority, divided by the audit value and expressed as a percentage (see Section 11 for performance criteria for audit accuracy).

6. Interferences and Contamination

6.1 Very volatile compounds, such as chloromethane and vinyl chloride can display peak broadening and co-elution with other species if the compounds are not delivered to the GC column in a small volume of carrier gas. Refocusing of the sample after collection on the primary trap, either on a separate focusing trap or at the head of the gas chromatographic column, mitigates this problem.

6.2 Interferences in canister samples may result from improper use or from contamination of: (1) the canisters due to poor manufacturing practices, (2) the canister cleaning apparatus, and (3) the sampling or analytical system. Attention to the following details will help to minimize the possibility of contamination of canisters.

6.2.1 Canisters should be manufactured using high quality welding and cleaning techniques, and new canisters should be filled with humidified zero air and then analyzed, after "aging" for 24 hours, to determine cleanliness. The cleaning apparatus, sampling system, and analytical system should be assembled of clean, high quality components and each system should be shown to be free of contamination.

6.2.2 Canisters should be stored in a contaminant-free location and should be capped tightly during shipment to prevent leakage and minimize any compromise of the sample.

6.2.3 Impurities in the calibration dilution gas (if applicable) and carrier gas, organic compounds out-gassing from the system components ahead of the trap, and solvent vapors in the laboratory account for the majority of contamination problems. The analytical system must be demonstrated to be free from contamination under the conditions of the analysis by running humidified zero air blanks. The use of non-chromatographic grade stainless steel tubing, non-PTFE thread sealants, or flow controllers with Buna-N rubber components must be avoided.

6.2.4 Significant contamination of the analytical equipment can occur whenever samples containing high VOC concentrations are analyzed. This in turn can result in carryover contamination in subsequent analyses. Whenever a high concentration (>25 ppbv of a trace species) sample is encountered, it should be followed by an analysis of humid zero air to check for carry-over contamination.

6.2.5 In cases when solid sorbents are used to concentrate the sample prior to analysis, the sorbents should be tested to identify artifact formation (see Compendium Method TO-17 for more information on artifacts).

7. Apparatus and Reagents

[Note: Compendium Method To-14A list more specific requirements for sampling and analysis apparatus which may be of help in identifying options. The listings below are generic.]

7.1 Sampling Apparatus

[Note: Subatmospheric pressure and pressurized canister sampling systems are commercially available and have been used as part of U.S. Environmental Protection Agency's Toxic Air Monitoring Stations (TAMS), Urban Air Toxic Monitoring Program (UATMP), the non-methane organic compound (NMOC) sampling and analysis program, and the Photochemical Assessment Monitoring Stations (PAMS).]

7.1.1 Subatmospheric Pressure (see Figure 1, without metal bellows type pump).

7.1.1.1 Sampling Inlet Line. Stainless steel tubing to connect the sampler to the sample inlet.

7.1.1.2 Sample Canister. Leak-free stainless steel pressure vessels of desired volume (e.g., 6 L), with valve and specially prepared interior surfaces (see Appendix B for a listing of known manufacturers/resellers of canisters).

7.1.1.3 Stainless Steel Vacuum/Pressure Gauges. Two types are required, one capable of measuring vacuum (–100 to 0 kPa or 0 to - 30 in Hg) and pressure (0–206 kPa or 0–30 psig) in the sampling system and a second type (for checking the vacuum of canisters during cleaning) capable of measuring at 0.05 mm Hg (see Appendix B) within 20%. Gauges should be tested clean and leak tight.

7.1.1.4 Electronic Mass Flow Controller. Capable of maintaining a constant flow rate (± 10%) over a sampling period of up to 24 hours and under conditions of changing temperature (20–40°C) and humidity.

7.1.1.5 Particulate Matter Filter. 2-μm sintered stainless steel in-line filter.

7.1.1.6 Electronic Timer. For unattended sample collection.

7.1.1.7 Solenoid Valve. Electrically-operated, bi-stable solenoid valve with Viton® seat and O-rings. A Skinner Magnelatch valve is used for purposes of illustration in the text (see Figure 2).

7.1.1.8 Chromatographic Grade Stainless Steel Tubing and Fittings. For interconnections. All such materials in contact with sample, analyte, and support gases prior to analysis should be chromatographic grade stainless steel or equivalent.

7.1.1.9 Thermostatically Controlled Heater. To maintain above ambient temperature inside insulated sampler enclosure.

7.1.1.10 Heater Thermostat. Automatically regulates heater temperature.

7.1.1.11 Fan. For cooling sampling system.

7.1.1.12 Fan Thermostat. Automatically regulates fan operation.

7.1.1.13 Maximum-Minimum Thermometer. Records highest and lowest temperatures during sampling period.

7.1.1.14 Stainless Steel Shut-off Valve. Leak free, for vacuum/pressure gauge.

7.1.1.15 Auxiliary Vacuum Pump. Continuously draws air through the inlet manifold at 10 L/min. or higher flow rate. Sample is extracted from the manifold at a lower rate, and excess air is exhausted.

[Note: The use of higher inlet flow rates dilutes any contamination present in the inlet and reduces the possibility of sample contamination as a result of contact with active adsorption sites on inlet walls.]

7.1.1.16 Elapsed Time Meter. Measures duration of sampling.

7.1.1.17 Optional Fixed Orifice, Capillary, or Adjustable Micrometering Valve. May be used in lieu of the electronic flow controller for grab samples or short duration time-integrated samples. Usually appropriate only in situations where screening samples are taken to assess future sampling activity.

7.1.2 Pressurized (see Figure 1 with metal bellows type pump and Figure 3).

7.1.2.1 Sample Pump. Stainless steel, metal bellows type, capable of 2 atmospheres output pressure. Pump must be free of leaks, clean, and uncontaminated by oil or organic compounds.

[Note: An alternative sampling system has been developed by Dr. R. Rasmussen, The Oregon Graduate Institute of Science and Technology, 20000 N.W. Walker Rd., Beaverton, Oregon 97006, 503-690-1077, and is illustrated in Figure 3. This flow system uses, in order, a pump, a mechanical flow regulator, and a mechanical compensation flow restrictive device. In this configuration the pump is purged with a large sample flow, thereby eliminating the need for an auxiliary vacuum pump to flush the sample inlet.]

7.1.2.2 Other Supporting Materials. All other components of the pressurized sampling system are similar to components discussed in Sections 7.1.1.1 through 7.1.1.17.

7.2 Analytical Apparatus

7.2.1 Sampling/Concentrator System (many commercial alternatives are available).

7.2.1.1 Electronic Mass Flow Controllers. Used to maintain constant flow (for purge gas, carrier gas and sample gas) and to provide an analog output to monitor flow anomalies.

7.2.1.2 Vacuum Pump. General purpose laboratory pump, capable of reducing the downstream pressure of the flow controller to provide the pressure differential necessary to maintain controlled flow rates of sample air.

7.2.1.3 Stainless Steel Tubing and Stainless Steel Fittings. Coated with fused silica to minimize active adsorption sites.

7.2.1.4 Stainless Steel Cylinder Pressure Regulators. Standard, two-stage cylinder regulators with pressure gauges.

7.2.1.5 Gas Purifiers. Used to remove organic impurities and moisture from gas streams.

7.2.1.6 Six-port Gas Chromatographic Valve. For routing sample and carrier gas flows.

7.2.1.7 Multisorbent Concentrator. Solid adsorbent packing with various retentive properties for adsorbing trace gases are commercially available from several sources. The packing contains more than one type of adsorbent packed in series.

7.2.1.7.1A pre-packed adsorbent trap (Supelco 2-0321) containing 200 mg Carbopack B (60/80 mesh) and 50 mg Carbosieve S-III (60/80 mesh) has been found to retain VOCs and allow some water vapor to pass through (6). The addition of a dry purging step allows for further water removal from the adsorbent trap. The steps constituting the dry purge technique that are normally used with multisorbent traps are illustrated in Figure 4. The optimum trapping and dry purging procedure for the Supelco trap consists of a sample volume of 320 mL and a dry nitrogen purge of 1300 mL. Sample trapping and drying is carried out at 25°C. The trap is back-flushed with helium and heated to 220°C to transfer material onto the GC column. A trap bake-out at 260°C for 5 minutes is conducted after each run.

7.2.1.7.2 An example of the effectiveness of dry purging is shown in Figure 5. The multisorbent used in this case is Tenax/Ambersorb 340/Charcoal (7). Approximately 20% of the initial water content in the sample remains after sampling 500 mL of air. The detector response to water vapor (hydrogen atoms detected by atomic emission detection) is plotted versus purge gas volume. Additional water reduction by a factor of 8 is indicated at temperatures of 45°C or higher. Still further water reduction is possible using a two-stage concentration/dryer system.

7.2.1.8 Cryogenic Concentrator. Complete units are commercially available from several vendor sources. The characteristics of the latest concentrators include a rapid, "ballistic" heating of the concentrator to release any trapped VOCs into a small carrier gas volume. This facilitates the separation of compounds on the gas chromatographic column.

7.2.2 Gas Chromatographic/Mass Spectrometric (GC/MS) System.

7.2.2.1 Gas Chromatograph. The gas chromatographic (GC) system must be capable of temperature programming. The column oven can be cooled to subambient temperature (e.g., -50°C) at the start of the gas chromatographic run to effect a resolution of the very volatile organic compounds. In other designs, the rate of release of compounds from the focusing trap in a two stage system obviates the need for retrapping of compounds on the column. The system must include or be interfaced to a concentrator and have all required accessories including analytical columns and gases. All GC carrier gas lines must be constructed from stainless steel or copper tubing. Non-polytetrafluoroethylene (PTFE) thread sealants or flow controllers with Buna-N rubber components must not be used.

7.2.2.2 Chromatographic Columns. 100% methyl silicone or 5% phenyl, 95% methyl silicone fused silica capillary columns of 0.25- to 0.53-mm I.D. of varying lengths are recommended for separation of many of the possible subsets of target compounds involving nonpolar compounds. However, considering the diversity of the target list, the choice is left to the operator subject to the performance standards given in Section 11.

7.2.2.3 Mass Spectrometer. Either a linear quadrupole or ion trap mass spectrometer can be used as long as it is capable of scanning from 35 to 300 amu every 1 second or less, utilizing 70 volts (nominal) electron energy in the electron impact ionization mode, and producing a mass spectrum which meets all the instrument performance acceptance criteria when 50 ng or less of p-bromofluorobenzene (BFB) is analyzed.

7.2.2.3.1Linear Quadrupole Technology. A simplified diagram of the heart of the quadrupole mass spectrometer is shown in Figure 6. The quadrupole consists of a parallel set of four rod electrodes mounted in a square configuration. The field within the analyzer is created by coupling opposite pairs of rods together and applying radiofrequency (RF) and direct current (DC) potentials between the pairs of rods. Ions created in the ion source from the reaction of column eluates with electrons from the electron source are moved through the

parallel array of rods under the influence of the generated field. Ions which are successfully transmitted through the quadrupole are said to possess stable trajectories and are subsequently recorded with the detection system. When the DC potential is zero, a wide band of m/z values is transmitted through the quadrupole. This "RF only" mode is referred to as the "total-ion" mode. In this mode, the quadrupole acts as a strong focusing lens analogous to a high pass filter. The amplitude of the RF determines the low mass cutoff. A mass spectrum is generated by scanning the DC and RF voltages using a fixed DC/RF ratio and a constant drive frequency or by scanning the frequency and holding the DC and RF constant. With the quadrupole system only 0.1 to 0.2 percent of the ions formed in the ion source actually reach the detector.

7.2.2.3.2Ion Trap Technology. An ion-trap mass spectrometer consists of a chamber formed between two metal surfaces in the shape of a hyperboloid of one sheet (ring electrode) and a hyperboloid of two sheets (the two end-cap electrodes). Ions are created within the chamber by electron impact from an electron beam admitted through a small aperture in one of the end caps. Radio frequency (RF) (and sometimes direct current voltage offsets) are applied between the ring electrode and the two end-cap electrodes establishing a quadrupole electric field. This field is uncoupled in three directions so that ion motion can be considered independently in each direction; the force acting upon an ion increases with the displacement of the ion from the center of the field but the direction of the force depends on the instantaneous voltage applied to the ring electrode. A restoring force along one coordinate (such as the distance, r, from the ion-trap's axis of radial symmetry) will exist concurrently with a repelling force along another coordinate (such as the distance, z, along the ion traps axis), and if the field were static the ions would eventually strike an electrode. However, in an RF field the force along each coordinate alternates direction so that a stable trajectory may be possible in which the ions do not strike a surface. In practice, ions of appropriate mass-to-charge ratios may be trapped within the device for periods of milliseconds to hours. A diagram of a typical ion trap is illustrated in Figure 7. Analysis of stored ions is performed by increasing the RF voltage, which makes the ions successively unstable. The effect of the RF voltage on the ring electrode is to "squeeze" the ions in the xy plane so that they move along the z axis. Half the ions are lost to the top cap (held at ground potential); the remaining ions exit the lower end cap to be detected by the electron multiplier. As the energy applied to the ring electrode is increased, the ions are collected in order of increasing mass to produce a conventional mass spectrum. With the ion trap, approximately 50 percent of the generated ions are detected. As a result, a significant increase in sensitivity can be achieved when compared to a full scan linear quadrupole system.

7.2.2.4 GC/MS Interface. Any gas chromatograph to mass spectrometer interface that gives acceptable calibration points for each of the analytes of interest and can be used to achieve all acceptable performance criteria may be used. Gas chromatograph to mass spectrometer interfaces constructed of all-glass, glass-lined, or fused silica-lined materials are recommended. Glass and fused silica should be deactivated.

7.2.2.5 Data System. The computer system that is interfaced to the mass spectrometer must allow the continuous acquisition and storage, on machine readable media, of all mass spectra obtained throughout the duration of the chromatographic program. The computer must have software that allows searching any GC/MS data file for ions of a specified mass and plotting such ion abundances versus time or scan number. This type of plot is defined as a Selected Ion Current Profile (SICP). Software must also be available that allows integrating the abundance in any SICP between specified time or scan number limits. Also, software must be available that allows for the comparison of sample spectra with reference library spectra. The National Institute of Standards and Technology (NIST) or Wiley Libraries or equivalent are recommended as reference libraries.

7.2.2.6 Off-line Data Storage Device. Device must be capable of rapid recording and retrieval of data and must be suitable for long-term, off-line data storage.

7.3 Calibration System and Manifold Apparatus (see Figure 8)

7.3.1 Calibration Manifold. Stainless steel, glass, or high purity quartz manifold, (e.g.,1.25-cm I.D. x 66-cm) with sampling ports and internal baffles for flow disturbance to ensure proper mixing. The manifold should be heated to ~50°C.

7.3.2 Humidifier. 500-mL impinger flask containing HPLC grade deionized water.

7.3.3 Electronic Mass Flow Controllers. One 0 to 5 L/min unit and one or more 0 to 100 mL/min units for air, depending on number of cylinders in use for calibration.

7.3.4 Teflon Filter(s). 47-mm Teflon® filter for particulate collection.

7.4 Reagents

7.4.1 Neat Materials or Manufacturer-Certified Solutions/Mixtures. Best source (see Section 9).

7.4.2 Helium and Air. Ultra-high purity grade in gas cylinders. He is used as carrier gas in the GC.

7.4.3 Liquid Nitrogen or Liquid Carbon Dioxide. Used to cool secondary trap.

7.4.4 Deionized Water. High performance liquid chromatography (HPLC) grade, ultra-high purity (for humidifier).

8. Collection of Samples in Canisters

8.1 Introduction

8.1.1 Canister samplers, sampling procedures, and canister cleaning procedures have not changed very much from the description given in the original Compendium Method TO-14. Much of the material in this section is therefore simply a restatement of the material given in Compendium Method TO-14, repeated here in order to have all the relevant information in one place.

8.1.2 Recent notable additions to the canister technology has been in the application of canister-based systems for example, to microenvironmental monitoring (8), the capture of breath samples (9), and sector sampling to identify emission sources of VOCs (10).

8.1.3 EPA has also sponsored the development of a mathematical model to predict the storage stability of arbitrary mixtures of trace gases in humidified air (3), and the investigation of the SilcoSteel™ process of coating the canister interior with a film of fused silica to reduce surface activity (11). A recent summary of storage stability data for VOCs in canisters is given in the open literature (5).

8.2 Sampling System Description

8.2.1 Subatmospheric Pressure Sampling [see Figure 1 (without metal bellows type pump)].

8.2.1.1 In preparation for subatmospheric sample collection in a canister, the canister is evacuated to 0.05 mm Hg (see Appendix C for discussion of evacuation pressure). When the canister is opened to the atmosphere containing the VOCs to be sampled, the differential pressure causes the sample to flow into the canister. This technique may be used to collect grab samples (duration of 10 to 30 seconds) or time-weighted-average (TWA) samples (duration of 1-24 hours) taken through a flow-restrictive inlet (e.g., mass flow controller, critical orifice).

8.2.1.2 With a critical orifice flow restrictor, there will be a decrease in the flow rate as the pressure approaches atmospheric. However, with a mass flow controller, the subatmospheric sampling system can maintain a constant flow rate from full vacuum to within about 7 kPa (1.0 psi) or less below ambient pressure.

8.2.2 Pressurized Sampling [see Figure 1 (with metal bellows type pump)].

8.2.2.1 Pressurized sampling is used when longer-term integrated samples or higher volume samples are required. The sample is collected in a canister using a pump and flow control arrangement to achieve a typical 101-202 kPa (15-30 psig) final canister pressure. For example, a 6-liter evacuated canister can be filled at 10 mL/min for 24 hours to achieve a final pressure of 144 kPa (21 psig).

8.2.2.2 In pressurized canister sampling, a metal bellows type pump draws in air from the sampling manifold to fill and pressurize the sample canister.

8.2.3 All Samplers.

8.2.3.1 A flow control device is chosen to maintain a constant flow into the canister over the desired sample period. This flow rate is determined so the canister is filled (to about 88.1 kPa for subatmospheric pressure sampling or to about one atmosphere above ambient pressure for pressurized sampling) over the desired sample period. The flow rate can be calculated by:

$$F = \frac{P \times V}{T \times 60}$$

where:

F = flow rate, mL/min.
P = final canister pressure, atmospheres absolute. P is approximately equal to

$$\frac{\text{kPa gauge}}{101.2} + 1$$

V = volume of the canister, mL.
T = sample period, hours.

For example, if a 6-L canister is to be filled to 202 kPa (2 atmospheres) absolute pressure in 24 hours, the flow rate can be calculated by:

$$F = \frac{2 \times 6000}{24 \times 60} = 8.3 \text{ mL/min}$$

8.2.3.2 For automatic operation, the timer is designed to start and stop the pump at appropriate times for the desired sample period. The timer must also control the solenoid valve, to open the valve when starting the pump and to close the valve when stopping the pump.

8.2.3.3 The use of the Skinner Magnelatch valve (see Figure 2) avoids any substantial temperature rise that would occur with a conventional, normally closed solenoid valve that would have to be energized during the entire sample period. The temperature rise in the valve could cause outgassing of organic compounds from the Viton® valve seat material. The Skinner Magnelatch valve requires only a brief electrical pulse to open or close at the appropriate start and stop times and therefore experiences no temperature increase. The pulses may be obtained either with an electronic timer that can be programmed for short (5 to 60 seconds) ON periods, or with a conventional mechanical timer and a special pulse circuit. A simple electrical pulse circuit for operating the Skinner Magnelatch solenoid valve with a conventional mechanical timer is illustrated in Figure 2(a). However, with this simple circuit, the valve may operate unreliably during brief power interruptions or if the timer is manually switched on and off too fast. A better circuit incorporating a time-delay relay to provide more reliable valve operation is shown in Figure 2(b).

8.2.3.4 The connecting lines between the sample inlet and the canister should be as short as possible to minimize their volume. The flow rate into the canister should remain relatively constant over the entire sampling period.

8.2.3.5 As an option, a second electronic timer may be used to start the auxiliary pump several hours prior to the sampling period to flush and condition the inlet line.

8.2.3.6 Prior to field use, each sampling system must pass a humid zero air certification (see Section 8.4.3). All plumbing should be checked carefully for leaks. The canisters must also pass a humid zero air certification before use (see Section 8.4.1).

8.3 Sampling Procedure

8.3.1 The sample canister should be cleaned and tested according to the procedure in Section 8.4.1.

8.3.2 A sample collection system is assembled as shown in Figures 1 and 3 and must be cleaned according to the procedure outlined in Sections 8.4.2 and 8.4.4.

[Note: The sampling system should be contained in an appropriate enclosure.]

8.3.3 Prior to locating the sampling system, the user may want to perform "screening analyses" using a portable GC system, as outlined in Appendix B of Compendium Method TO-14A, to determine potential volatile organics present and potential "hot spots." The information gathered from the portable GC screening analysis would be used in developing a monitoring protocol, which includes the sampling system location, based upon the "screening analysis" results.

8.3.4 After "screening analysis," the sampling system is located. Temperatures of ambient air and sampler box interior are recorded on the canister sampling field test data sheet (FTDS), as documented in Figure 9.

[Note: The following discussion is related to Figure 1]

8.3.5 To verify correct sample flow, a "practice" (evacuated) canister is used in the sampling system.

[Note: For a subatmospheric sampler, a flow meter and practice canister are needed. For the pump-driven system, the practice canister is not needed, as the flow can be measured at the outlet of the system.]

A certified mass flow meter is attached to the inlet line of the manifold, just in front of the filter. The canister is opened. The sampler is turned on and the reading of the certified mass flow meter is compared to the sampler mass flow controller. The values should agree within ±10%. If not, the sampler mass flow meter needs to be recalibrated or there is a leak in the system. This should be investigated and corrected.

[Note: Mass flow meter readings may drift. Check the zero reading carefully and add or subtract the zero reading when reading or adjusting the sampler flow rate to compensate for any zero drift.]

After 2 minutes, the desired canister flow rate is adjusted to the proper value (as indicated by the certified mass flow meter) by the sampler flow control unit controller (e.g., 3.5 mL/min for 24 hr, 7.0 mL/min for 12 hr). Record final flow under "CANISTER FLOW RATE" on the FTDS.

8.3.6 The sampler is turned off and the elapsed time meter is reset to 000.0.

[Note: Whenever the sampler is turned off, wait at least 30 seconds to turn the sampler back on.]

8.3.7 The "practice" canister and certified mass flow meter are disconnected and a clean certified (see Section 8.4.1) canister is attached to the system.

8.3.8 The canister valve and vacuum/pressure gauge valve are opened.

8.3.9 Pressure/vacuum in the canister is recorded on the canister FTDS (see Figure 9) as indicated by the sampler vacuum/pressure gauge.

8.3.10 The vacuum/pressure gauge valve is closed and the maximum-minimum thermometer is reset to current temperature. Time of day and elapsed time meter readings are recorded on the canister FTDS.

8.3.11 The electronic timer is set to start and stop the sampling period at the appropriate times. Sampling starts and stops by the programmed electronic timer.

8.3.12 After the desired sampling period, the maximum, minimum, current interior temperature and current ambient temperature are recorded on the FTDS. The current reading from the flow controller is recorded.

8.3.13 At the end of the sampling period, the vacuum/pressure gauge valve on the sampler is briefly opened and closed and the pressure/vacuum is recorded on the FTDS. Pressure should be close to desired pressure.

[Note: For a subatmospheric sampling system, if the canister is at atmospheric pressure when the field final pressure check is performed, the sampling period may be suspect. This information should be noted on the sampling field data sheet.]

Time of day and elapsed time meter readings are also recorded.

8.3.14 The canister valve is closed. The sampling line is disconnected from the canister and the canister is removed from the system. For a subatmospheric system, a certified mass flow meter is once again connected to the inlet manifold in front of the in-line filter and a "practice" canister is attached to the Magnelatch valve of the sampling system. The final flow rate is recorded on the canister FTDS (see Figure 9).

[Note: For a pressurized system, the final flow may be measured directly.]

The sampler is turned off.

8.3.15 An identification tag is attached to the canister. Canister serial number, sample number, location, and date, as a minimum, are recorded on the tag. The canister is routinely transported back to the analytical laboratory with other canisters in a canister shipping case.

8.4 Cleaning and Certification Program

8.4.1 Canister Cleaning and Certification.

8.4.1.1 All canisters must be clean and free of any contaminants before sample collection.

8.4.1.2 All canisters are leak tested by pressurizing them to approximately 206 kPa (30 psig) with zero air.

[Note: The canister cleaning system in Figure 10 can be used for this task.]

The initial pressure is measured, the canister valve is closed, and the final pressure is checked after 24 hours. If acceptable, the pressure should not vary more than ± 13.8 kPa (± 2 psig) over the 24 hour period.

8.4.1.3 A canister cleaning system may be assembled as illustrated in Figure 10. Cryogen is added to both the vacuum pump and zero air supply traps. The canister(s) are connected to the manifold. The vent shut-off valve and the canister valve(s) are opened to release any remaining pressure in the canister(s). The vacuum pump is started and the vent shut-off valve is then closed and the vacuum shut-off valve is opened. The canister(s) are evacuated to <0.05 mm Hg (see Appendix B) for at least 1 hour.

[Note: On a daily basis or more often if necessary, the cryogenic traps should be purged with zero air to remove any trapped water from previous canister cleaning cycles.]

Air released/evacuated from canisters should be diverted to a fume hood.

8.4.1.4 The vacuum and vacuum/pressure gauge shut-off valves are closed and the zero air shut-off valve is opened to pressurize the canister(s) with humid zero air to approximately 206 kPa (30 psig). If a zero gas generator system is used, the flow rate may need to be limited to maintain the zero air quality.

8.4.1.5 The zero air shut-off valve is closed and the canister(s) is allowed to vent down to atmospheric pressure through the vent shut-off valve. The vent shut-off valve is closed. Repeat Sections 8.4.1.3 through 8.4.1.5 two additional times for a total of three (3) evacuation/pressurization cycles for each set of canisters.

8.4.1.6 At the end of the evacuation/pressurization cycle, the canister is pressurized to 206 kPa (30 psig) with humid zero air. The canister is then analyzed by a GC/MS analytical system. Any canister that has not tested clean (compared to direct analysis of humidified zero air of less than 0.2 ppbv of targeted VOCs) should not be used. As a "blank" check of the canister(s) and cleanup procedure, the final humid zero air fill of 100% of the canisters is analyzed until the cleanup system and canisters are proven reliable (less than 0.2 ppbv of any target VOCs). The check can then be reduced to a lower percentage of canisters.

8.4.1.7 The canister is reattached to the cleaning manifold and is then reevacuated to <0.05 mm Hg (see Appendix B) and remains in this condition until used. The canister valve is closed. The canister is removed from the cleaning system and the canister connection is capped with a stainless steel fitting. The canister is now ready for collection of an air sample. An identification tag is attached to the inlet of each canister for field notes and chain-of-custody purposes. An alternative to evacuating the canister at this point is to store the canisters and reevacuate them just prior to the next use.

8.4.1.8 As an option to the humid zero air cleaning procedures, the canisters are heated in an isothermal oven not to exceed 100°C during evacuation of the canister to ensure that higher molecular weight compounds are not retained on the walls of the canister.

[Note: For sampling more complex VOC mixtures the canisters should be heated to higher temperatures during the cleaning procedure although a special high temperature valve would be needed].

Once heated, the canisters are evacuated to <0.05 mm Hg (see Appendix B) and maintained there for 1 hour. At the end of the heated/evacuated cycle, the canisters are pressurized with humid zero air and analyzed by a GC/MS system after a minimum of 12 hrs of "aging." Any canister that has not tested clean (less than 0.2 ppbv each of targeted compounds) should not be used. Once tested clean, the canisters are reevacuated to <0.05 mm Hg (see Appendix B) and remain in the evacuated state until used. As noted in Section 8.4.1.7, reevacuation can occur just prior to the next use.

8.4.2 Cleaning Sampling System Components.

8.4.2.1 Sample components are disassembled and cleaned before the sampler is assembled. Nonmetallic parts are rinsed with HPLC grade deionized water and dried in a vacuum oven at 50°C. Typically, stainless steel parts and fittings are cleaned by placing them in a beaker of methanol in an ultrasonic bath for 15 minutes. This procedure is repeated with hexane as the solvent.

8.4.2.2 The parts are then rinsed with HPLC grade deionized water and dried in a vacuum oven at 100°C for 12 to 24 hours.

8.4.2.3 Once the sampler is assembled, the entire system is purged with humid zero air for 24 hours.

8.4.3 Zero Air Certification.

[Note: In the following sections, "certification" is defined as evaluating the sampling system with humid zero air and humid calibration gases that pass through all active components of the sampling system. The system is "certified" if no significant additions or deletions (less than 0.2 ppbv each of target compounds) have occurred when challenged with the test gas stream.]

8.4.3.1 The cleanliness of the sampling system is determined by testing the sampler with humid zero air without an evacuated gas sampling canister, as follows.

8.4.3.2 The calibration system and manifold are assembled, as illustrated in Figure 8. The sampler (without an evacuated gas canister) is connected to the manifold and the zero air cylinder is activated to generate a humid gas stream (2 L/min) to the calibration manifold [see Figure 8(b)].

8.4.3.3 The humid zero gas stream passes through the calibration manifold, through the sampling system (without an evacuated canister) to the water management system/VOC preconcentrator of an analytical system.

[Note: The exit of the sampling system (without the canister) replaces the canister in Figure 11.]

After the sample volume (e.g., 500 mL) is preconcentrated on the trap, the trap is heated and the VOCs are thermally desorbed and refocussed on a cold trap. This trap is heated and the VOCs are thermally desorbed onto the head of the capillary column. The VOCs are refocussed prior to gas chromatographic separation. Then, the oven temperature (programmed) increases and the VOCs begin to elute and are detected by a GC/MS (see Section 10) system. The analytical system should not detect greater than 0.2 ppbv of any targeted VOCs in order for the sampling system to pass the humid zero air certification test. Chromatograms (using an FID) of a certified sampler and contaminated sampler are illustrated in Figures 12(a) and 12(b), respectively. If the sampler passes the humid zero air test, it is then tested with humid calibration gas standards containing selected VOCs at concentration levels expected in field sampling (e.g., 0.5 to 2 ppbv) as outlined in Section 8.4.4.

8.4.4 Sampler System Certification with Humid Calibration Gas Standards from a Dynamic Calibration System

8.4.4.1 Assemble the dynamic calibration system and manifold as illustrated in Figure 8.

8.4.4.2 Verify that the calibration system is clean (less than 0.2 ppbv of any target compounds) by sampling a humidified gas stream, *without* gas calibration standards, with a previously certified clean canister (see Section 8.1).

8.4.4.3 The assembled dynamic calibration system is certified clean if less than 0.2 ppbv of any targeted compounds is found.

8.4.4.4 For generating the humidified calibration standards, the calibration gas cylinder(s) containing nominal concentrations of 10 ppmv in nitrogen of selected VOCs is attached to the calibration system as illustrated in Figure 8. The gas cylinders are opened and the gas mixtures are passed through 0 to 10 mL/min certified mass flow controllers to generate ppb levels of calibration standards.

8.4.4.5 After the appropriate equilibrium period, attach the sampling system (containing a certified evacuated canister) to the manifold, as illustrated in Figure 8(b).

8.4.4.6 Sample the dynamic calibration gas stream with the sampling system.

8.4.4.7 Concurrent with the sampling system operation, realtime monitoring of the calibration gas stream is accomplished by the on-line GC/MS analytical system [Figure 8(a)] to provide reference concentrations of generated VOCs.

8.4.4.8 At the end of the sampling period (normally the same time period used for experiments), the sampling system canister is analyzed and compared to the reference GC/MS analytical system to determine if the concentration of the targeted VOCs was increased or decreased by the sampling system.

8.4.4.9 A recovery of between 90% and 110% is expected for all targeted VOCs.

8.4.5 Sampler System Certification without Compressed Gas Cylinder Standards.

8.4.5.1 Not all the gases on the Title III list are available/compatible with compressed gas standards. In these cases sampler certification must be approached by different means.

8.4.5.2 Definitive guidance is not currently available in these cases; however, Section 9.2 lists several ways to generate gas standards. In general, Compendium Method TO-14A compounds (see Table 1) are available commercially as compressed gas standards.

9. GC/MS Analysis of Volatiles from Canisters

9.1 Introduction

9.1.1 The analysis of canister samples is accomplished with a GC/MS system. Fused silica capillary columns are used to achieve high temporal resolution of target compounds. Linear quadrupole or ion trap mass spectrometers are employed for compound detection. The heart of the system is composed of the sample inlet concentrating device that is needed to increase sample loading into a detectable range. Two examples of concentrating systems are discussed. Other approaches are acceptable as long as they are compatible with achieving the system performance criteria given in Section 11.

9.1.2 With the first technique, a whole air sample from the canister is passed through a multisorbent packing (including single adsorbent packings) contained within a metal or glass tube maintained at or above the surrounding air temperature. Depending on the water retention properties of the packing, some or most of the water vapor passes completely through the trap during sampling. Additional drying of the sample is accomplished after the sample concentration is completed by forward purging the trap with clean, dry helium or another inert gas (air is not used). The sample is then thermally desorbed from the packing and backflushed from the trap onto a gas chromatographic column. In some systems a "refocusing" trap is placed between the primary trap and the gas chromatographic column. The specific system design downstream of the primary trap depends on technical factors such as the rate of thermal desorption and sampled volume, but the objective in most cases is to enhance chromatographic resolution of the individual sample components before detection on a mass spectrometer.

9.1.3 Sample drying strategies depend on the target list of compounds. For some target compound lists, the multisorbent packing of the concentrator can be selected from hydrophobic adsorbents which allow a high percentage of water vapor in the sample to pass through the concentrator during sampling and without significant loss of the target compounds. However, if very volatile organic compounds are on the target list, the adsorbents required for their retention may also strongly retain water vapor and a more lengthy dry purge is necessary prior to analysis.

9.1.4 With the second technique, a whole air sample is passed through a concentrator where the VOCs are condensed on a reduced temperature surface (cold trap). Subsequently, the condensed gases are thermally desorbed and backflushed from the trap with an inert gas onto a gas chromatographic column. This concentration technique is similar to that discussed in Compendium Method TO-14, although a membrane dryer is not used. The sample size is reduced in volume to limit the amount of water vapor that is also collected (100 mL or less may be necessary). The attendant reduction in sensitivity is offset by enhancing the sensitivity of detection, for example by using an ion trap detector.

9.2 Preparation of Standards

9.2.1 Introduction.

9.2.1.1 When available, standard mixtures of target gases in high pressure cylinders must be certified traceable to a NIST Standard Reference Material (SRM) or to a NIST/EPA approved Certified Reference Material (CRM). Manufacturer's certificates of analysis must be retained to track the expiration date.

9.2.1.2 The neat standards that are used for making trace gas standards must be of high purity; generally a purity of 98 percent or better is commercially available.

9.2.1.3 Cylinder(s) containing approximately 10 ppmv of each of the target compounds are typically used as primary stock standards. The components may be purchased in one cylinder or in separate cylinders depending on compatibility of the compounds and the pressure of the mixture in the cylinder. Refer to manufacturer's specifications for guidance on purchasing and mixing VOCs in gas cylinders.

9.2.2 Preparing Working Standards.

9.2.2.1 Instrument Performance Check Standard. Prepare a standard solution of BFB in humidified zero air at a concentration which will allow collection of 50 ng of BFB or less under the optimized concentration parameters.

9.2.2.2 Calibration Standards. Prepare five working calibration standards in humidified zero air at a concentration which will allow collection at the 2, 5, 10, 20, and 50 ppbv level for each component under the optimized concentration parameters.

9.2.2.3 Internal Standard Spiking Mixture. Prepare an internal spiking mixture containing bromochloromethane, chlorobenzene-d_5, and 1,4-difluorobenzene at 10 ppmv each in humidified zero air to be added to the sample or calibration standard. 500 µL of this mixture spiked into 500 mL of sample will result in a concentration of 10 ppbv. The internal standard is introduced into the trap during the collection time for all calibration, blank, and sample analyses using the apparatus shown in Figure 13 or by equivalent means. The volume of internal standard spiking mixture added for each analysis must be the same from run to run.

9.2.3 Standard Preparation by Dynamic Dilution Technique.

9.2.3.1 Standards may be prepared by dynamic dilution of the gaseous contents of a cylinder(s) containing the gas calibration stock standards with humidified zero air using mass flow controllers and a calibration manifold. The working standard may be delivered from the manifold to a clean, evacuated canister using a pump and mass flow controller.

9.2.3.2 Alternatively, the analytical system may be calibrated by sampling directly from the manifold if the flow rates are optimized to provide the desired amount of calibration standards. However, the use of the canister as a reservoir prior to introduction into the concentration system resembles the procedure normally used to collect samples and is preferred. Flow rates of the dilution air and cylinder standards (all expressed in the same units) are measured using a bubble meter or calibrated electronic flow measuring device, and the concentrations of target compounds in the manifold are then calculated using the dilution ratio and the original concentration of each compound.

$$\text{Manifold Conc.} = \frac{(\text{Original Conc.})\ (\text{Std. Gas Flowrate})}{(\text{Air Flowrate}) + (\text{Std. Gas Flowrate})}$$

9.2.3.3 Consider the example of 1 mL/min flow of 10 ppmv standard diluted with 1,000 mL/min of humid air provides a nominal 10 ppbv mixture, as calculated below:

$$\text{Manifold Conc.} = \frac{(10\ \text{ppm})(1\ \text{mL/min})(1000\ \text{ppb}/1\ \text{ppm})}{(1000\ \text{mL/min}) + (1\ \text{mL/min})} = 10\ \text{ppb}$$

9.2.4 Standard Preparation by Static Dilution Bottle Technique

[Note: Standards may be prepared in canisters by spiking the canister with a mixture of components prepared in a static dilution bottle (12). This technique is used specifically for liquid standards.]

9.2.4.1 The volume of a clean 2-liter round-bottom flask, modified with a threaded glass neck to accept a Mininert septum cap, is determined by weighing the amount of water required to completely fill up the flask. Assuming a density for the water of 1 g/mL, the weight of the water in grams is taken as the volume of the flask in milliliters.

9.2.4.2 The flask is flushed with helium by attaching a tubing into the glass neck to deliver the helium. After a few minutes, the tubing is removed and the glass neck is immediately closed with a Mininert septum cap.

9.2.4.3 The flask is placed in a 60°C oven and allowed to equilibrate at that temperature for about 15 minutes. Predetermined aliquots of liquid standards are injected into the flask making sure to keep the flask temperature constant at 60°C.

9.2.4.4 The contents are allowed to equilibrate in the oven for at least 30 minutes. To avoid condensation, syringes must be preheated in the oven at the same temperature prior to withdrawal of aliquots to avoid condensation.

9.2.4.5 Sample aliquots may then be taken for introduction into the analytical system or for further dilution. An aliquot or aliquots totaling greater than 1 percent of the flask volume should be avoided.

9.2.4.6 Standards prepared by this method are stable for one week. The septum must be replaced with each freshly prepared standard.

9.2.4.7 The concentration of each component in the flask is calculated using the following equation:

$$\text{Concentration, mg/L} = \frac{(V_a)(d)}{V_f}$$

where: V_a = Volume of liquid neat standard injected into the flask, µL.
d = Density of the liquid neat standard, mg/µL.
V_f = Volume of the flask, L.

9.2.4.8 To obtain concentrations in ppbv, the equation given in Section 9.2.5.7 can be used.

[Note: In the preparation of standards by this technique, the analyst should make sure that the volume of neat standard injected into the flask does not result in an overpressure due to the higher partial pressure produced by the standard compared to the vapor pressure in the flask. Precautions should also be taken to avoid a significant decrease in pressure inside the flask after withdrawal of aliquot(s).]

9.2.5 Standard Preparation Procedure in High Pressure Cylinders

[Note: Standards may be prepared in high pressure cylinders (13). A modified summary of the procedure is provided below.]

9.2.5.1 The standard compounds are obtained as gases or neat liquids (greater than 98 percent purity).

9.2.5.2 An aluminum cylinder is flushed with high-purity nitrogen gas and then evacuated to better than 25 in. Hg.

9.2.5.3 Predetermined amounts of each neat standard compound are measured using a microliter or gastight syringe and injected into the cylinder. The cylinder is equipped with a heated injection port and nitrogen flow to facilitate sample transfer.

9.2.5.4 The cylinder is pressurized to 1000 psig with zero nitrogen.

[Note: User should read all SOPs associated with generating standards in high pressure cylinders. Follow all safety requirements to minimize danger from high pressure cylinders.]

9.2.5.5 The contents of the cylinder are allowed to equilibrate (~24 hrs) prior to withdrawal of aliquots into the GC system.

9.2.5.6 If the neat standard is a gas, the cylinder concentration is determined using the following equation:

$$\text{Concentration, ppbv} = \frac{\text{Volume}_{\text{standard}}}{\text{Volume}_{\text{dilution gas}}} \times 10^9$$

[Note: Both values must be expressed in the same units.]

9.2.5.7 If the neat standard is a liquid, the gaseous concentration can be determined using the following equations:

$$V = \frac{nRT}{P}$$

and:

$$n = \frac{(mL)(d)}{MW}$$

where:
- V = Gaseous volume of injected compound at EPA standard temperature (25°C) and pressure (760 mm Hg), L.
- n = Moles.
- R = Gas constant, 0.08206 L-atm/mole °K.
- T = 298°K (standard temperature).
- P = 1 standard pressure, 760 mm Hg (1 atm).
- mL = Volume of liquid injected, mL.
- d = Density of the neat standard, g/mL.
- MW = Molecular weight of the neat standard expressed, g/g-mole.

The gaseous volume of the injected compound is divided by the cylinder volume at STP and then multiplied by 10^9 to obtain the component concentration in ppb units.

9.2.6 Standard Preparation by Water Methods.

[Note: Standards may be prepared by a water purge and trap method (14) and summarized as follows].

9.2.6.1 A previously cleaned and evacuated canister is pressurized to 760 mm Hg absolute (1 atm) with zero grade air.

9.2.6.2 The air gauge is removed from the canister and the sparging vessel is connected to the canister with the short length of 1/16 in. stainless steel tubing.

[Note: Extra effort should be made to minimize possible areas of dead volume to maximize transfer of analytes from the water to the canister.]

9.2.6.3 A measured amount of the stock standard solution and the internal standard solution is spiked into 5 mL of water.

9.2.6.4 This water is transferred into the sparge vessel and purged with nitrogen for 10 mins at 100 mL/min. The sparging vessel is maintained at 40°C.

9.2.6.5 At the end of 10 mins, the sparge vessel is removed and the air gauge is re-installed, to further pressurize the canister with pure nitrogen to 1500 mm Hg absolute pressure (approximately 29 psia).

9.2.6.6 The canister is allowed to equilibrate overnight before use.

9.2.6.7 A schematic of this approach is shown in Figure 14.

9.2.7 Preparation of Standards by Permeation Tubes.

9.2.7.1 Permeation tubes can be used to provide standard concentration of a trace gas or gases. The permeation of the gas can occur from inside a permeation tube containing the trace species of interest to an air stream outside. Permeation can also occur from outside a permeable membrane tube to an air stream passing through the tube (e.g., a tube of permeable material immersed in a liquid).

9.2.7.2 The permeation system is usually held at a constant temperature to generate a constant concentration of trace gas. Commercial suppliers provide systems for generation and dilution of over 250 compounds. Some commercial suppliers of permeation tube equipment are listed in Appendix D.

9.2.8 Storage of Standards.

9.2.8.1 Working standards prepared in canisters may be stored for thirty days in an atmosphere free of potential contaminants.

9.2.8.2 It is imperative that a storage logbook be kept to document storage time.

10. GC/MS Operating Conditions

10.1 Preconcentrator

The following are typical cryogenic and adsorbent preconcentrator analytical conditions which, however, depend on the specific combination of solid sorbent and must be selected carefully by the operator. The reader is referred to Tables 1 and 2 of Compendium Method TO-17 for guidance on selection of sorbents. An example of a system using a solid adsorbent preconcentrator with a cryofocusing trap is discussed in the literature (15). Oven temperature programming starts above ambient.

10.1.1 Sample Collection Conditions

Cryogenic Trap **Adsorbent Trap**

Set point	-150°C	Set point	27°C
Sample volume	- up to 100 mL	Sample volume	- up to 1,000 mL
Carrier gas purge flow	- none	Carrier gas purge flow	- selectable

[Note: The analyst should optimize the flow rate, duration of sampling, and absolute sample volume to be used. Other preconcentration systems may be used provided performance standards (see Section 11) are realized.]

10.1.2 Desorption Conditions

Cryogenic Trap		**Adsorbent Trap**	
Desorb Temperature	120°C	Desorb Temperature	Variable
Desorb Flow Rate	~ 3 mL/min He	Desorb Flow Rate	~3 mL/min He
Desorb Time	<60 sec	Desorb Time	<60 sec

The adsorbent trap conditions depend on the specific solid adsorbents chosen (see manufacturers' specifications).

10.1.3 Trap Reconditioning Conditions.

Cryogenic Trap		**Adsorbent Trap**	
Initial bakeout	120°C (24 hrs)	Initial bakeout	
Variable (24 hrs)			
After each run	120°C (5 min)	After each run	Variable (5 min)

10.2 GC/MS System

10.2.1 Optimize GC conditions for compound separation and sensitivity. Baseline separation of benzene and carbon tetrachloride on a 100% methyl polysiloxane stationary phase is an indication of acceptable chromatographic performance.

10.2.2 The following are the recommended gas chromatographic analytical conditions when using a 50-meter by 0.3-mm I.D., 1 µm film thickness fused silica column with refocusing on the column.

Item	**Condition**	
Carrier Gas:	Helium	
Flow Rate:	Generally 1-3 mL/min as recommended by manufacturer	
Temperature Program:	Initial Temperature:	-50°C
	Initial Hold Time:	2 min
	Ramp Rate:	8° C/min
	Final Temperature:	200°C
	Final Hold Time:	Until all target compounds elute.

10.2.3 The following are the recommended mass spectrometer conditions:

Item	**Condition**

Electron Energy:	70 Volts (nominal)
Mass Range:	35-300 amu [the choice of 35 amu excludes the detection of some target compounds such as methanol and formaldehyde, and the quantitation of others such as ethylene oxide, ethyl carbamate, etc. (see Table 2). Lowering the mass range and using special programming features available on modern gas chromatographs will be necessary in these cases, but are not considered here.
Scan Time:	To give at least 10 scans per peak, not to exceed 1 second per scan].

A schematic for a typical GC/MS analytical system is illustrated in Figure 15.

10.3 Analytical Sequence

10.3.1 Introduction. The recommended GC/MS analytical sequence for samples during each 24-hour time period is as follows:

- Perform instrument performance check using bromofluorobenzene (BFB).
- Initiate multi-point calibration or daily calibration checks.
- Perform a laboratory method blank.
- Complete this sequence for analysis of $\leq$20 field samples.

10.4 Instrument Performance Check

10.4.1 Summary. It is necessary to establish that a given GC/MS meets tuning and standard mass spectral abundance criteria prior to initiating any data collection. The GC/MS system is set up according to the manufacturer's specifications, and the mass calibration and resolution of the GC/MS system are then verified by the analysis of the instrument performance check standard, bromofluorobenzene (BFB).

10.4.2 Frequency. Prior to the analyses of any samples, blanks, or calibration standards, the Laboratory must establish that the GC/MS system meets the mass spectral ion abundance criteria for the instrument performance check standard containing BFB. The instrument performance check solution must be analyzed initially and once per 24-hour time period of operation.

The 24-hour time period for GC/MS instrument performance check and standards calibration (initial calibration or daily calibration check criteria) begins at the injection of the BFB which the laboratory records as documentation of a compliance tune.

10.4.3 Procedure. The analysis of the instrument performance check standard is performed by trapping 50 ng of BFB under the optimized preconcentration parameters. The BFB is introduced from a cylinder into the GC/MS via a sample loop valve injection system similar to that shown in Figure 13.

The mass spectrum of BFB must be acquired in the following manner. Three scans (the peak apex scan and the scans immediately preceding and following the apex) are acquired and averaged. Background subtraction is conducted using a single scan prior to the elution of BFB.

10.4.4 Technical Acceptance Criteria. Prior to the analysis of any samples, blanks, or calibration standards, the analyst must establish that the GC/MS system meets the mass spectral ion abundance criteria for the instrument performance check standard as specified in Table 3.

10.4.5 Corrective Action. If the BFB acceptance criteria are not met, the MS must be retuned. It may be necessary to clean the ion source, or quadrupoles, or take other necessary actions to achieve the acceptance criteria.

10.4.6 Documentation. Results of the BFB tuning are to be recorded and maintained as part of the instrumentation log.

10.5 Initial Calibration

10.5.1 Summary. Prior to the analysis of samples and blanks but after the instrument performance check standard criteria have been met, each GC/MS system must be calibrated at five concentrations that span the monitoring range of interest in an initial calibration sequence to determine instrument sensitivity and the linearity of GC/MS response for the target compounds. For example, the range of interest may be 2 to 20 ppbv, in which case the five concentrations would be 1, 2, 5, 10 and 25 ppbv.

One of the calibration points from the initial calibration curve must be at the same concentration as the daily calibration standard (e.g., 10 ppbv).

10.5.2 Frequency. Each GC/MS system must be recalibrated following corrective action (e.g., ion source cleaning or repair, column replacement, etc.) which may change or affect the initial calibration criteria or if the daily calibration acceptance criteria have not been met.

If time remains in the 24-hour time period after meeting the acceptance criteria for the initial calibration, samples may be analyzed.

If time does not remain in the 24-hour period after meeting the acceptance criteria for the initial calibration, a new analytical sequence shall commence with the analysis of the instrument performance check standard followed by analysis of a daily calibration standard.

10.5.3 Procedure. Verify that the GC/MS system meets the instrument performance criteria in Section 10.4.

The GC must be operated using temperature and flow rate parameters equivalent to those in Section 10.2.2. Calibrate the preconcentration-GC/MS system by drawing the standard into the system. Use one of the standards preparation techniques described under Section 9.2 or equivalent.

A minimum of five concentration levels are needed to determine the instrument sensitivity and linearity. One of the calibration levels should be near the detection level for the compounds of interest. The calibration range should be chosen so that linear results are obtained as defined in Sections 10.5.1 and 10.5.5.

Quantitation ions for the target compounds are shown in Table 2. The primary ion should be used unless interferences are present, in which case a secondary ion is used.

10.5.4 Calculations.

[Note: In the following calculations, an internal standard approach is used to calculate response factors. The area response used is that of the primary quantitation ion unless otherwise stated.]

10.5.4.1 Relative Response Factor (RRF). Calculate the relative response factors for each target compound relative to the appropriate internal standard (i.e., standard with the nearest retention time) using the following equation:

$$RRF = \frac{A_x C_{is}}{A_{is} C_x}$$

where: RRF = Relative response factor.
A_x = Area of the primary ion for the compound to be measured, counts.
A_{is} = Area of the primary ion for the internal standard, counts.
C_{is} = Concentration of internal standard spiking mixture, ppbv.
C_x = Concentration of the compound in the calibration standard, ppbv.

[Note: The equation above is valid under the condition that the volume of internal standard spiking mixture added in all field and QC analyses is the same from run to run, and that the volume of field and QC sample introduced into the trap is the same for each analysis. C_{is} and C_x must be in the same units.]

10.5.4.2 Mean Relative Response Factor. Calculate the mean RRF for each compound by averaging the values obtained at the five concentrations using the following equation:

$$\overline{RRF} = \sum_{i=1}^{n} \frac{x_i}{n}$$

where: $\overline{RRF}$ = Mean relative response factor.
x_i = RRF of the compound at concentration i.
n = Number of concentration values, in this case 5.

10.5.4.3 Percent Relative Standard Deviation (%RSD). Using the RRFs from the initial calibration, calculate the %RSD for all target compounds using the following equations:

$$\%RSD = \frac{SD_{RRF}}{\overline{RRF}} \times 100$$

and

$$SD_{RRF} = \sqrt{\sum_{i=1}^{N} \frac{(RRF_i - \overline{RRF})^2}{N - 1}}$$

where: SD_{RRF} = Standard deviation of initial response factors (per compound).
RRF_i = Relative response factor at a concentration level i.
$\overline{RRF}$ = Mean of initial relative response factors (per compound).

10.5.4.4 Relative Retention Times (RRT). Calculate the RRTs for each target compound over the initial calibration range using the following equation:

$$RRT = \frac{RT_c}{RT_{is}}$$

where: RT_c = Retention time of the target compound, seconds
RT_{is} = Retention time of the internal standard, seconds.

10.5.4.5 Mean of the Relative Retention Times ($\overline{RRT}$). Calculate the mean of the relative retention times ($\overline{RRT}$) for each analyte target compound over the initial calibration range using the following equation:

$$\overline{RRT} = \sum_{i=1}^{n} \frac{RRT}{n}$$

where: $\overline{RRT}$ = Mean relative retention time for the target compound for each initial calibration standard.

RRT = Relative retention time for the target compound at each calibration level.

10.5.4.6 Tabulate Primary Ion Area Response (Y) for Internal Standard. Tabulate the area response (Y) of the primary ions (see Table 2) and the corresponding concentration for each compound and internal standard.

10.5.4.7 Mean Area Response ($\overline{Y}$) for Internal Standard. Calculate the mean area response ($\overline{Y}$) for each internal standard compound over the initial calibration range using the following equation:

$$\overline{Y} = \sum_{i=1}^{n} \frac{Y_i}{n}$$

where: $\overline{Y}$ = Mean area response.

Y = Area response for the primary quantitation ion for the internal standard for each initial calibration standard.

10.5.4.8 Mean Retention Times ($\overline{RT}$). Calculate the mean of the retention times ($\overline{RT}$) for each internal standard over the initial calibration range using the following equation:

$$\overline{RT} = \sum_{i=1}^{n} \frac{RT_i}{n}$$

where: $\overline{RT}$ = Mean retention time, seconds

RT = Retention time for the internal standard for each initial calibration standard, seconds.

10.5.5 Technical Acceptance Criteria for the Initial Calibration.

10.5.5.1 The calculated %RSD for the RRF for each compound in the calibration table must be less than 30% with at most two exceptions up to a limit of 40%.

[Note: This exception may not be acceptable for all projects. Many projects may have a specific target list of compounds which would require the lower limit for all compounds.]

10.5.5.2 The RRT for each target compound at each calibration level must be withiin 0.06 RRT units of the mean RRT for the compound.

10.5.5.3 The area response Y of at each calibration level must be within 40% of the mean area response $\overline{Y}$ over the initial calibration range for each internal standard.

10.5.5.4 The retention time shift for each of the internal standards at each calibration level must be within 20 s of the mean retention time over the initial calibration range for each internal standard.

10.5.6 Corrective Action.

10.5.6.1 Criteria. If the initial calibration technical acceptance criteria are not met, inspect the system for problems. It may be necessary to clean the ion source, change the column, or take other corrective actions to meet the initial calibration technical acceptance criteria.

10.5.6.2 Schedule. Initial calibration acceptance criteria *must* be met before any field samples, performance evaluation (PE) samples, or blanks are analyzed.

10.6 Daily Calibration

10.6.1 Summary. Prior to the analysis of samples and blanks but after tuning criteria have been met, the initial calibration of each GC/MS system must be routinely checked by analyzing a daily calibration standard to ensure that the instrument continues to remain under control. The daily calibration standard, which is the nominal 10 ppbv level calibration standard, should contain all the target compounds.

10.6.2 Frequency. A check of the calibration curve must be performed once every 24 hours on a GC/MS system that has met the tuning criteria. The daily calibration sequence starts with the injection of the BFB. If the BFB analysis meets the ion abundance criteria for BFB, then a daily calibration standard may be analyzed.

10.6.3 Procedure. The mid-level calibration standard (10 ppbv) is analyzed in a GC/MS system that has met the tuning and mass calibration criteria following the same procedure in Section 10.5.

10.6.4 Calculations. Perform the following calculations.

[Note: As indicated earlier, the area response of the primary quantitation ion is used unless otherwise stated.]

10.6.4.1 Relative Response Factor (RRF). Calculate a relative response factor (RRF) for each target compound using the equation in Section 10.5.4.1.

10.6.4.2 Percent Difference (%D). Calculate the percent difference in the RRF of the daily RRF (24-hour) compared to the mean RRF in the most recent initial calibration. Calculate the %D for each target compound using the following equation:

$$\%D = \frac{RRF_c - \overline{RRF_i}}{\overline{RRF_i}} \times 100$$

where: RRF_c = RRF of the compound in the continuing calibration standard.

$\overline{RRF_i}$ = Mean RRF of the compound in the most recent initial calibration.

10.6.5 Technical Acceptance Criteria. The daily calibration standard must be analyzed at the concentration level and frequency described in this Section 10.6 and on a GC/MS system meeting the BFB instrument performance check criteria (see Section 10.4).

The %D for each target compound in a daily calibration sequence must be within ±30 percent in order to proceed with the analysis of samples and blanks. A control chart showing %D values should be maintained.

10.6.6 Corrective Action. If the daily calibration technical acceptance criteria are not met, inspect the system for problems. It may be necessary to clean the ion source, change the column, or take other corrective actions to meet the daily calibration technical acceptance criteria.

Daily calibration acceptance criteria must be met before any field samples, performance evaluation (PE) samples, or blanks are analyzed. If the % D criteria are not met, it will be necessary to rerun the daily calibration sample.

10.7 Blank Analyses

10.7.1 Summary. To monitor for possible laboratory contamination, laboratory method blanks are analyzed at least once in a 24-hour analytical sequence. All steps in the analytical procedure are performed on the blank

using all reagents, standards, equipment, apparatus, glassware, and solvents that would be used for a sample analysis.

A laboratory method blank (LMB) is an unused, certified canister that has not left the laboratory. The blank canister is pressurized with humidified, ultra-pure zero air and carried through the same analytical procedure as a field sample. The injected aliquot of the blank must contain the same amount of internal standards that are added to each sample.

10.7.2 Frequency. The laboratory method blank must be analyzed after the calibration standard(s) and before any samples are analyzed.

Whenever a high concentration sample is encountered (i.e., outside the calibration range), a blank analysis should be performed immediately after the sample is completed to check for carryover effects.

10.7.3 Procedure. Fill a cleaned and evacuated canister with humidified zero air (RH >20 percent, at 25°C). Pressurize the contents to 2 atm.

The blank sample should be analyzed using the same procedure outlined under Section 10.8.

10.7.4 Calculations. The blanks are analyzed similar to a field sample and the equations in Section 10.5.4 apply.

10.7.5 Technical Acceptance Criteria. A blank canister should be analyzed daily.

The area response for each internal standard (IS) in the blank must be within ±40 percent of the mean area response of the IS in the most recent valid calibration.

The retention time for each of the internal standards must be within ±0.33 minutes between the blank and the most recent valid calibration.

The blank should not contain any target analyte at a concentration greater than its quantitation level (three times the MDL as defined in Section 11.2) and should not contain additional compounds with elution characteristics and mass spectral features that would interfere with identification and measurement of a method analyte.

10.7.6 Corrective Action. If the blanks do not meet the technical acceptance criteria, the analyst should consider the analytical system to be out of control. It is the responsibility of the analyst to ensure that contaminants in solvents, reagents, glassware, and other sample storage and processing hardware that lead to discrete artifacts and/or elevated baselines in gas chromatograms be eliminated. If contamination is a problem, the source of the contamination must be investigated and appropriate corrective measures need to be taken and documented before further sample analysis proceeds.

If an analyte in the blank is found to be out of control (i.e., contaminated) and the analyte is also found in associated samples, those sample results should be "flagged" as possibly contaminated.

10.8 Sample Analysis

10.8.1 Summary. An aliquot of the air sample from a canister (e.g., 500 mL) is preconcentrated and analyzed by GC/MS under conditions stated in Sections 10.1 and 10.2. If using the multisorbent/dry purge approach, adjust the dry purge volume to reduce water effects in the analytical system to manageable levels.

[Note: The analyst should be aware that pressurized samples of high humidity samples will contain condensed water. As a result, the humidity of the sample released from the canister during analysis will vary

in humidity, being lower at the higher canister pressures and increasing in humidity as the canister pressures decreases. Storage integrity of water soluble compounds may also be affected.]

10.8.2 Frequency. If time remains in the 24-hour period in which an initial calibration is performed, samples may be analyzed without analysis of a daily calibration standard.

If time does not remain in the 24-hour period since the injection of the instrument performance check standard in which an initial calibration is performed, both the instrument performance check standard and the daily calibration standard should be analyzed before sample analysis may begin.

10.8.3 Procedure for Instrumental Analysis. Perform the following procedure for analysis.

10.8.3.1 All canister samples should be at temperature equilibrium with the laboratory.

10.8.3.2 Check and adjust the mass flow controllers to provide correct flow rates for the system.

10.8.3.3 Connect the sample canister to the inlet of the GC/MS analytical system, as shown in Figure 15 [Figure 16 shows an alternate two stage concentrator using multisorbent traps followed by a trap cooled by a closed cycle cooler (15)]. The desired sample flow is established through the six-port chromatographic valve and the preconcentrator to the downstream flow controller. The absolute volume of sample being pulled through the trap must be consistent from run to run.

10.8.3.4 Heat/cool the GC oven and cryogenic or adsorbent trap to their set points. Assuming a six-port value is being used, as soon as the trap reaches its lower set point, the six-port chromatographic valve is cycled to the trap position to begin sample collection. Utilize the sample collection time which has been optimized by the analyst.

10.8.3.5 Use the arrangement shown in Figure 13, (i.e., a gastight syringe or some alternate method) introduce an internal standard during the sample collection period. Add sufficient internal standard equivalent to 10 ppbv in the sample. For example, a 0.5 mL volume of a mixture of internal standard compounds, each at 10 ppmv concentration, added to a sample volume of 500 mL, will result in 10 ppbv of each internal standard in the sample.

10.8.3.6 After the sample and internal standards are preconcentrated on the trap, the GC sampling valve is cycled to the inject position and the trap is swept with helium and heated. Assuming a focusing trap is being used, the trapped analytes are thermally desorbed onto a focusing trap and then onto the head of the capillary column and are separated on the column using the GC oven temperature program. The canister valve is closed and the canister is disconnected from the mass flow controller and capped. The trap is maintained at elevated temperature until the beginning of the next analysis.

10.8.3.7 Upon sample injection onto the column, the GC/MS system is operated so that the MS scans the atomic mass range from 35 to 300 amu. At least ten scans per eluting chromatographic peak should be acquired. Scanning also allows identification of unknown compounds in the sample through searching of library spectra.

10.8.3.8 Each analytical run must be checked for saturation. The level at which an individual compound will saturate the detection system is a function of the overall system sensitivity and the mass spectral characteristics of that compound.

10.8.3.9 Secondary ion quantitation is allowed only when there are sample matrix interferences with the primary ion. If secondary ion quantitation is performed, document the reasons in the laboratory record book.

10.8.4 Calculations. The equation below is used for calculating concentrations.

$$C_x = \frac{A_x C_{is} DF}{A_{is} \overline{RRF}}$$

where: C_x = Compound concentration, ppbv.

A_x = Area of the characteristic ion for the compound to be measured, counts.

A_{is} = Area of the characteristic ion for the specific internal standard, counts.

C_{is} = Concentration of the internal standard spiking mixture, ppbv

.

$\overline{RRF}$ = Mean relative response factor from the initial calibration.

DF = Dilution factor calculated as described in section 2. If no dilution is performed, DF = 1.

[Note: The equation above is valid under the condition that the volume (~500 µL) of internal standard spiking mixture added in all field and QC analyses is the same from run to run, and that the volume (~500 mL) of field and QC sample introduced into the trap is the same for each analysis.]

10.8.5 Technical Acceptance Criteria.

[Note: If the most recent valid calibration is an initial calibration, internal standard area responses and RTs in the sample are evaluated against the corresponding internal standard area responses and RTs in the mid level standard (10 ppbv) of the initial calibration.]

10.8.5.1 The field sample must be analyzed on a GC/MS system meeting the BFB tuning, initial calibration, and continuing calibration technical acceptance criteria at the frequency described in Sections 10.4, 10.5 and 10.6.

10.8.5.2 The field samples must be analyzed along with a laboratory method blank that met the blank technical acceptance criteria.

10.8.5.3 All of the target analyte peaks should be within the initial calibration range.

10.8.5.4 The retention time for each internal standard must be within ±0.33 minutes of the retention time of the internal standard in the most recent valid calibration.

10.8.6 Corrective Action. If the on-column concentration of any compound in any sample exceeds the initial calibration range, an aliquot of the original sample must be diluted and reanalyzed. Guidance in performing dilutions and exceptions to this requirement are given below.

- Use the results of the original analysis to determine the approximate dilution factor required to get the largest analyte peak within the initial calibration range.
- The dilution factor chosen should keep the response of the largest analyte peak for a target compound in the upper half of the initial calibration range of the instrument.

[Note: Analysis involving dilution should be reported with a dilution factor and nature of the dilution gas.]

10.8.6.1 Internal standard responses and retention times must be evaluated during or immediately after data acquisition. If the retention time for any internal standard changes by more than 20 sec from the latest daily (24-hour) calibration standard (or mean retention time over the initial calibration range), the GC/MS system must be inspected for malfunctions, and corrections made as required.

10.8.6.2 If the area response for any internal standard changes by more than ±40 percent between the sample and the most recent valid calibration, the GC/MS system must be inspected for malfunction and

corrections made as appropriate. When corrections are made, reanalysis of samples analyzed while the system was malfunctioning is necessary.

10.8.6.3 If, after reanalysis, the area responses or the RTs for all internal standards are inside the control limits, then the problem with the first analysis is considered to have been within the control of the Laboratory. Therefore, submit only data from the analysis with SICPs within the limits. This is considered the initial analysis and should be reported as such on all data deliverables.

11. Requirements for Demonstrating Method Acceptability for VOC Analysis from Canisters

11.1 Introduction

11.1.1 There are three performance criteria which must be met for a system to qualify under Compendium Method TO-15. These criteria are: the method detection limit of ≤0.5 ppbv, replicate precision within 25 percent, and audit accuracy within 30 percent for concentrations normally expected in contaminated ambient air (0.5 to 25 ppbv).

11.1.2 Either SIM or SCAN modes of operation can be used to achieve these criteria, and the choice of mode will depend on the number of target compounds, the decision of whether or not to determine tentatively identified compounds along with other VOCs on the target list, as well as on the analytical system characteristics.

11.1.3 Specific criteria for each Title III compound on the target compound list must be met by the analytical system. These criteria were established by examining summary data from EPA's Toxics Air Monitoring System Network and the Urban Air Toxics Monitoring Program network. Details for the determination of each of the criteria follow.

11.2 Method Detection Limit

11.2.1 The procedure chosen to define the method detection limit is that given in the *Code of Federal Regulations* (40 CFR 136 Appendix B).

11.2.2 The method detection limit is defined for each system by making seven replicate measurements of the compound of interest at a concentration near (within a factor of five) the expected detection limit, computing the standard deviation for the seven replicate concentrations, and multiplying this value by 3.14 (i.e., the Student's t value for 99 percent confidence for seven values). Employing this approach, the detection limits given in Table 4 were obtained for some of the VOCs of interest.

11.3 Replicate Precision

11.3.1 The measure of replicate precision used for this program is the absolute value of the difference between replicate measurements of the sample divided by the average value and expressed as a percentage as follows:

$$\text{percent difference} = \frac{|x_1 - x_2|}{\bar{x}} \times 100$$

where: x_1 = First measurement value.

x_2 = Second measurement value.

$\bar{x}$ = Average of the two values.

11.3.2 There are several factors which may affect the precision of the measurement. The nature of the compound of interest itself such as molecular weight, water solubility, polarizability, etc., each have some effect on the precision, for a given sampling and analytical system. For example, styrene, which is classified as a polar VOC, generally shows slightly poorer precision than the bulk of nonpolar VOCs. A primary influence on precision is the concentration level of the compound of interest in the sample, i.e., the precision degrades as the concentration approaches the detection limit. A conservative measure was obtained from replicate analysis of "real world" canister samples from the TAMS and UATMP networks. These data are summarized in Table 5 and suggest that a replicate precision value of 25 percent can be achieved for each of the target compounds.

11.4 Audit Accuracy

11.4.1 A measure of analytical accuracy is the degree of agreement with audit standards. Audit accuracy is defined as the difference between the nominal concentration of the audit compound and the measured value divided by the audit value and expressed as a percentage, as illustrated in the following equation:

$$\text{Audit Accuracy, \%} = \frac{\text{Spiked Value} - \text{Observed Value}}{\text{Spiked Value}} \times 100$$

11.4.2 Audit accuracy results for TAMS and UATMP analyses are summarized in Table 6 and were used to form the basis for a selection of 30 percent as the performance criterion for audit accuracy.

12. References

1. *Compendium of Methods for the Determination of Toxic Organic Compounds in Ambient Air: Method TO-14A, Second Edition*, U. S. Environmental Protection Agency, Research Triangle Park, NC, EPA 600/625/R-96/010b, January 1997.

2. Winberry, W. T., Jr., et al., *Statement-of-Work (SOW) for the Analysis of Air Toxics From Superfund Sites*, U. S. Environmental Protection Agency, Office of Solid Waste, Contract Laboratory Program, Washington, D.C., Draft Report, June 1990.

3. Coutant, R.W., *Theoretical Evaluation of Stability of Volatile Organic Chemicals and Polar Volatile Organic Chemicals in Canisters*, U. S. Environmental Protection Agency, EPA Contract No. 68-DO-0007, Work Assignment No. 45, Subtask 2, Battelle, Columbus, OH, June 1993.

4. Kelly, T.J., Mukund, R., Gordon, S.M., and Hays, M.J., *Ambient Measurement Methods and Properties of the 189 Title III Hazardous Air Pollutants*, U. S. Environmental Protection Agency, EPA Contract No. 68-DO-0007, Work Assignment 44, Battelle, Columbus, OH, March 1994.

5. Kelly T. J. and Holdren, M.W., "Applicability of Canisters for Sample Storage in the Determination of Hazardous Air Pollutants," *Atmos. Environ.*, Vol. 29, 2595-2608, May 1995.

6. Kelly, T.J., Callahan, P.J., Pleil, J.K., and Evans, G.E., "Method Development and Field Measurements for Polar Volatile Organic Compounds in Ambient Air," *Environ. Sci. Technol.*, Vol. 27, 1146-1153, 1993.

7. McClenny, W.A., Oliver, K.D. and Daughtrey, E.H.., Jr. "Dry Purging of Solid Adsorbent Traps to Remove Water Vapor Before Thermal Desorption of Trace Organic Gases," *J. Air and Waste Manag. Assoc.*, Vol. 45, 792-800, June 1995.

8. Whitaker, D.A., Fortmann, R.C. and Lindstrom, A.B. "Development and Testing of a Whole Air Sampler for Measurement of Personal Exposures to Volatile Organic Compounds," *Journal of Exposure Analysis and Environmental Epidemiology*, Vol. 5, No. 1, 89-100, January 1995.

9. Pleil, J.D. and Lindstrom, A.B., "Collection of a Single Alveolar Exhaled Breath for Volatile Organic Compound Analysis," *American Journal of Industrial Medicine*, Vol. 28, 109-121, 1995.

10. Pleil, J.D. and McClenny, W.A., "Spatially Resolved Monitoring for Volatile Organic Compounds Using Remote Sector Sampling," *Atmos. Environ.*, Vol. 27A, No. 5, 739-747, August 1993.

11. Holdren, M.W., et al., Unpublished Final Report, EPA Contract 68-DO-0007, Battelle, Columbus, OH. Available from J.D. Pleil, MD-44, U. S. Environmental Protection Agency, Research Triangle Park, NC, 27711, 919-541-4680.

12. Morris, C.M., Burkley, R.E. and Bumgarner, J.E., "Preparation of Multicomponent Volatile Organic Standards Using Dilution Bottles," *Anal. Letts*., Vol. 16 (A20), 1585-1593, 1983.

13. Pollack, A.J., Holdren, M.W., "Multi-Adsorbent Preconcentration and Gas Chromatographic Analysis of Air Toxics With an Automated Collection/Analytical System," in the *Proceedings of the 1990 EPA/A&WMA International Symposium of Measurement of Toxic and Related Air Pollutants*, U. S. Environmental Protection Agency, Research Triangle Park, NC, EPA/600/9-90-026, May 1990.

14. Stephenson, J.H.M., Allen, F., Slagle, T., "Analysis of Volatile Organics in Air via Water Methods" in *Proceedings of the 1990 EPA/A&WMA International Symposium on Measurement of Toxic and Related Air Pollutants*, U. S. Environmental Protection Agency, Research Triangle Park, NC, EPA 600/9-90-026, May 1990.

15. Oliver, K. D., Adams, J. R., Davehtrey, E. H., Jr., McClenny, W. A., Young, M. J., and Parade, M. A., "Techniques for Monitoring Toxices VOCs in Air: Sorbent Preconcentration Closed-Cycle Cooler Cryofocusing, and GC/MS Analysis," *Environ. Sci. Technol.*, Vol. 30, 1938-1945, 1996.

APPENDIX A.

LISTING OF SOME COMMERCIAL WATER MANAGEMENT SYSTEMS USED WITH AUTOGC SYSTEMS

Tekmar Dohrman Company
7143 East Kemper Road
Post Office Box 429576
Cincinnati, Ohio 45242-9576
(513) 247-7000
(513) 247-7050 (Fax)
(800) 543-4461
[Moisture control module]

Entech Laboratory Automation
950 Enchanted Way No. 101
Simi Valley, California 93065
(805) 527-5939
(805) 527-5687 (Fax)
[Microscale Purge and Trap]

Dynatherm Analytical Instruments
Post Office Box 159
Kelton, Pennsylvania 19346
(215) 869-8702
(215) 869-3885 (Fax)
[Thermal Desorption System]

XonTech Inc.
6862 Hayenhurst Avenue
Van Nuys, CA 91406
(818) 787-7380
(818) 787-4275 (Fax)
[Multi-adsorbent trap/dry purge]

Graseby
500 Technology Ct.
Smyrna, Georgia 30082
(770) 319-9999
(770) 319-0336 (Fax)
(800) 241-6898
[Controlled Desorption Trap]

Varian Chromatography System
2700 Mitchell Drive
Walnut Creek, California 94898
(510) 945-2196
(510) 945-2335 (FAX)
[Variable Temperature Adsorption Trap]

APPENDIX B.

COMMENT ON CANISTER CLEANING PROCEDURES

The canister cleaning procedures given in Section 8.4 require that canister pressure be reduced to <0.05mm Hg before the cleaning process is complete. Depending on the vacuum system design (diameter of connecting tubing, valve restrictions, etc.) and the placement of the vacuum gauge, the achievement of this value may take several hours. In any case, the pressure gauge should be placed near the canisters to determine pressure. The objective of requiring a low pressure evacuation during canister cleaning is to reduce contaminants. If canisters can be routinely certified (<0.2 ppbv for target compounds) while using a higher vacuum, then this criteria can be relaxed. However, the ultimate vacuum achieved during cleaning should always be <0.2mm Hg.

Canister cleaning as described in Section 8.4 and illustrated in Figure 10 requires components with special features. The vacuum gauge shown in Figure 10 must be capable of measuring 0.05mm Hg with less than a 20% error. The vacuum pump used for evacuating the canister must be noncontaminating while being capable of achieving the 0.05 mm Hg vacuum as monitored near the canisters. Thermoelectric vacuum gauges and turbomolecular drag pumps are typically being used for these two components.

An alternate to achieving the canister certification requirement of <0.2 ppbv for all target compounds is the criteria used in Compendium Method TO-12 that the total carbon count be <10ppbC. This check is less expensive and typically more exacting than the current certification requirement and can be used if proven to be equivalent to the original requirement. This equivalency must be established by comparing the total nonmethane organic carbon (TNMOC) expressed in ppbC to the requirement that individual target compounds be <0.2 ppbv for a series of analytical runs.

APPENDIX C.

LISTING OF COMMERCIAL MANUFACTURERS AND RE-SUPPLIERS OF SPECIALLY-PREPARED CANISTERS

BRC/Rasmussen
17010 NW Skyline Blvd.
Portland, Oregon 97321
(503) 621-1435

Meriter
1790 Potrero Drive
San Jose, CA 95124
(408) 265-6482

Restek Corporation
110 Benner Circle
Bellefonte, PA 16823-8812
(814) 353-1300
(800) 356-1688

Scientific Instrumentation Specialists
P.O. Box 8941
815 Courtney Street
Moscow, ID 83843
(208) 882-3860

Graseby
500 Technology Ct.
Smyrna, Georgia 30082
(404) 319-9999
(800) 241-6898

XonTech Inc.
6862 Hayenhurst Avenue
Van Nuys, CA 91406
(818) 787-7380

APPENDIX D.

LISTING OF COMMERCIAL SUPPLIERS OF PERMEATION TUBES AND SYSTEMS

Kin-Tek
504 Laurel St.
Lamarque, Texas 77568
(409) 938-3627
(800) 326-3627

Vici Metronics, Inc.
2991 Corvin Drive
Santa Clara, CA 95051
(408) 737-0550

Analytical Instrument Development, Inc.
Rt. 41 and Newark Rd.
Avondale, PA 19311
(215) 268-3181

Ecology Board, Inc.
9257 Independence Ave.
Chatsworth, CA 91311
(213) 882-6795

Tracor, Inc.
6500 Tracor Land
Austin, TX
(512) 926-2800

Metronics Associates, Inc.
3201 Porter Drive
Standford Industrial Park
Palo Alto, CA 94304
(415) 493-5632

TABLE 1. VOLATILE ORGANIC COMPOUNDS ON THE TITLE III CLEAN AIR AMENDMENT LIST--MEMBERSHIP IN COMPENDIUM METHOD TO-14A LIST AND THE SOW-CLP LIST OF VOCs

Compound	CAS No.	BP (°C)	v.p. (mmHg)[1]	MW[1]	TO-14A	CLP-SOW
Methyl chloride (chloromethane); CH3Cl	74-87-3	-23.7	3.8 x 10	50.5	X	X
Carbonyl sulfide; COS	463-58-1	-50.0	3.7 x 10	60.1		
Vinyl chloride (chloroethene); C2H3Cl	75-01-4	-14.0	3.2 x 10	62.5	X	X
Diazomethane; CH2N2	334-88-3	-23.0	2.8 x 10	42.1		
Formaldehyde; CH2O	50-00-0	-19.5	2.7 x 10	30		
1,3-Butadiene; C4H6	106-99-0	-4.5	2.0 x 10	54		X
Methyl bromide (bromomethane); CH3Br	74-83-9	3.6	1.8 x 10	94.9	X	X
Phosgene; CCl2O	75-44-5	8.2	1.2 x 10	99		
Vinyl bromide (bromoethene); C2H3Br	593-60-2	15.8	l.l x 10	107		
Ethylene oxide; C2H4O	75-21-8	10.7	1.1 x 10	44		
Ethyl chloride (chloroethane); C2H5Cl	75-00-3	12.5	1.0 x 10	64.5	X	X
Acetaldehyde (ethanal); C2H4O	75-07-0	21.0	952	44		
Vinylidene chloride (1,1-dichloroethylene); C2H2Cl2	75-35-4	31.7	500	97	X	X
Propylene oxide; C3H6O	75-56-9	34.2	445	58		
Methyl iodide (iodomethane); CH3I	74-88-4	42.4	400	141.9		
Methylene chloride; CH2Cl2	75-09-2	40.0	349	84.9	X	X
Methyl isocyanate; C2H3NO	624-83-9	59.6	348	57.1		
Allyl chloride (3-chloropropene); C3H5Cl	107-05-1	44.5	340	76.5	X	X
Carbon disulfide; CS2	75-15-0	46.5	260	76		
Methyl tert-butyl ether; C5H12O	1634-04-4	55.2	249	86		
Propionaldehyde; C2H5CHO	123-38-6	49.0	235	58.1		
Ethylidene dichloride (1,1-dichloroethane); C2H4Cl2	75-34-3	57.0	230	99	X	

TABLE 1. (continued)

Compound	CAS No.	BP (°C)	v.p. (mmHg)[1]	MW[1]	TO-14A	CLP-SOW
Chloroprene (2-chloro-1,3-butadiene); C4H5Cl	126-99-8	59.4	226	88.5		
Chloromethyl methyl ether; C2H5ClO	107-30-2	59.0	224	80.5		
Acrolein (2-propenal); C3H4O	107-02-8	52.5	220	56		X
1,2-Epoxybutane (1,2-butylene oxide); C4H8O	106-88-7	63.0	163	72		
Chloroform; CHCl3	67-66-3	61.2	160	119	X	X
Ethyleneimine (aziridine); C2H5N	151-56-4	56	160.0	43		
1,1-Dimethylhydrazine; C2H8N2	57-14-7	63	157.0	60.0		
Hexane; C6H14	110-54-3	69.0	120	86.2	X	
1,2-Propyleneimine (2-methylaziridine); C3H7N	75-55-8	66.0	112	57.1		
Acrylonitrile (2-propenenitrile); C3H3N	107-13-1	77.3	100	53	X	
Methyl chloroform (1,1,1-trichloroethane); C2H3Cl3	71-55-6	74.1	100	133.4	X	X
Methanol; CH4O	67-56-1	65.0	92.0	32		X
Carbon tetrachloride; CCl4	56-23-5	76.7	90.0	153.8	X	X
Vinyl acetate; C4H6O2	108-05-4	72.2	83.0	86		X
Methyl ethyl ketone (2-butanone); C4H8O	78-93-3	79.6	77.5	72		X
Benzene; C6H6	71-43-2	80.1	76.0	78	X	X
Acetonitrile (cyanomethane); C2H3N	75-05-8	82	74.0	41.0		X
Ethylene dichloride (1,2-dichloroethane); C2H4Cl2	107-06-2	83.5	61.5	99	X	X
Triethylamine; C6H15N	121-44-8	89.5	54.0	101.2		
Methylhydrazine; CH6N2	60-34-4	87. 8	49.6	46.1		
Propylene dichloride (1,2-dichloropropane); C3H6Cl2	78-87-5	97.0	42.0	113	X	X
2,2,4-Trimethyl pentane C8H18	540-84-l	99.2	40.6	114		
1,4-Dioxane (1,4-Diethylene oxide); C4H8O2	123-91-1	101	37.0	88		
Bis(chloromethyl) ether; C2H4Cl2O	542-88-1	104	30.0	115		
Ethyl acrylate; C5H8O2	140-88-5	100	29.3	100		
Methyl methacrylate; C5H8O2	80-62-6	101	28.0	100.1		

TABLE 1. (continued)

Compound	CAS No.	BP (°C)	v.p. (mmgHg)[1]	MW[1]	TO-14A	CLP-SOW
Methyl methacrylate; C5H8O2	80-62-101	101	28.0	100.1		
1,3-Dichloropropene; C3H4Cl2 (cis)	542-75-6	112	27.8	111	X	X
Toluene; C7H8	108-88-3	111	22.0	92	X	X
Trichloroethylene; C2HCl3	79-01-6	87.0	20.0	131.4	X	X
1,1,2-Trichloroethane; C2H3Cl3	79-00-5	114	19.0	133.4	X	X
Tetrachloroethylene; C2Cl4	127-18-4	121	14.0	165.8	X	X
Epichlorohydrin (1-chloro-2,3-epoxy propane); C3H5ClO	106-89-8	117	12.0	92.5		
Ethylene dibromide (1,2-dibromoethane); C2H4Br2	106-93-4	132	11.0	187.9	X	X
N-Nitroso-N-methylurea; C2H5N3O2	684-93-5	124	10.0	103		
2-Nitropropane; C3H7NO2	79-46-9	120	10.0	89		
Chlorobenzene; C6H5Cl	108-90-7	132	8.8	112.6	X	X
Ethylbenzene; C8H10	100-41-4	136	7.0	106	X	X
Xylenes (isomer & mixtures); C8H10	1330-20-7	142	6.7	106.2	X	X
Styrene; C8H8	100-42-5	145	6.6	104	X	X
p-Xylene; C8H10	106-42-3	138	6.5	106.2	X	X
m-Xylene; C8H10	108-38-3	139	6.0	106.2	X	X
Methyl isobutyl ketone (hexone); C6H12O	108-10-1	117	6.0	100.2		
Bromoform (tribromomethane); CHBr3	75-25-2	149	5.6	252.8		
l,l,2,2-Tetrachloroethane; C2H2Cl4	79-34-5	146	5.0	167.9	X	X
o-Xylene; C8H10	95-47-6	144	5.0	106.2	X	X
Dimethylcarbamyl chloride; C3H6ClNO	79-44-7	166	4.9	107.6		
N-Nitrosodimethylamine; C2H6N2O	62-75-9	152	3.7	74		
Beta-Propiolactone; C3H4O2	57-57-8	Decomposes at 162	3.4	72		
Cumene (isopropylbenzene); C9Hl2	98-82-8	153	3.2	120		

TABLE 1. (continued)

Compound	CAS No.	BP (°C)	v.p. (mmHg)[1]	MW[1]	TO-14A	CLP-SOW
Cumene (isopropylbenzene); C9H12	98-82-8	153	3.2	120		
Acrylic acid; C3H4O2	79-10-7	141	3.2	72		
N,N-Dimethylformamide; C3H7NO	68-12-2	153	2.7	73		
1,3-Propane sultone; C3H6O3S	1120-71-4	180/30mm	2.0	122.1		
Acetophenone; C8H8O	98-86-2	202	1.0	120		
Dimethyl sulfate; C2H6O4S	77-78-1	188	1.0	126.1		
Benzyl chloride (a-chlorotoluene); C7H7Cl	100-44-7	179	1.0	126.6	X	X
1,2-Dibromo-3-chloropropane; C3H5Br2Cl	96-12-8	196	0.80	236.4		
Bis(2-Chloroethyl)ether; C4H8Cl2O	111-44-4	178	0.71	143		
Chloroacetic acid; C2H3ClO2	79-11-8	189	0.69	94.5		
Aniline (aminobenzene); C6H7N	62-53-3	184	0.67	93		
1,4-Dichlorobenzene (p-); C6H4Cl2	106-46-7	173	0.60	147	X	X
Ethyl carbamate (urethane); C3H7NO2	51-79-6	183	0.54	89		
Acrylamide; C3H5NO	79-06-1	125/25 mm	0.53	71		
N,N-Dimethylaniline; C8H11N	121-69-7	192	0.50	121		
Hexachloroethane; C2Cl6	67-72-1	Sublimes at 186	0.40	236.7		
Hexachlorobutadiene; C4Cl6	87-68-3	215	0.40	260.8	X	X
Isophorone; C9H14O	78-59-1	215	0.38	138.2		
N-Nitrosomorpholine; C4H8N2O2	59-89-2	225	0.32	116.1		
Styrene oxide; C8H8O	96-09-3	194	0.30	120.2		
Diethyl sulfate; C4H10O4S	64-67-5	208	0.29	154		
Cresylic acid (cresol isomer mixture);C7H8O	1319-77-3	202	0.26	108		
o-Cresol; C7H8O	95-48-7	191	0.24	108		
Catechol (o-hydroxyphenol); C6H6O2	120-80-9	240	0.22	110		
Phenol; C6H6O	108-95-2	182	0.20	94		

TABLE 1. (continued)

Compound	CAS No.	BP (°C)	v.p. (mmHg)[1]	MW[1]	TO-14A	CLP-SOW
Catechol (o-hydroxyphenol); C6H6O2	120-80-9	240	0.22	110		
Phenol; C6H6O	108-95-2	182	0.20	94		
1,2,4-Trichlorobenzene; C6H3Cl3	120-82-1	213	0.18	181.5	X	X
nitrobenzene; C6H5NO2	98-95-3	211	0.15	123		

[1]Vapor pressure (v.p.), boiling point (BP) and molecularweight (MW) data from:
(a)D. L. Jones and J. bursey, "Simultaneous Control of PM-10 and Hazardous Air Pollutants II: Rationale for Selection of Hazardous Air Pollutants as Potential Particulate Matter," Report EPA-452/R-93/013, U. S. Environmental Protection Agency, Research Triangle Park, NC. October 1992;
(b)R. C. Weber, P. A. Parker, and M. Bowser. Vapor Pressure Distribution of Selected Organic Chemicals, Report EPA-600/2-81-021, U. S. Environmental Protection Agency, Cincinnati, OH, February 1981; and
(c)R. C. Weast, ed., "CRC Handbook of Chemistry and Physics," 59th edition, CRC Press, Boca Raton, 1979.

TABLE 2. CHARACTERISTIC MASSES (M/Z) USED FOR QUANTIFYING THE TITLE III CLEAN AIR ACT AMENDMENT COMPOUNDS

Compound	CAS No.	Primary Ion	Secondary Ion
Methyl chloride (chloromethane); CH3Cl	74-87-3	50	52
Carbonyl sulfide; COS	463-S8-1	60	62
Vinyl chloride (chloroethene); C2H3Cl	7S-01-4	62	64
Diazomethane; CH2N2	334-88-3	42	41
Formaldehyde; CH2O	50-00-0	29	30
1,3-Butadiene; C4H6	106-99-0	39	54
Methyl bromide (bromomethane); CH3Br	74-83-9	94	96
Phosgene; CCl2O	75-44-5	63	65
Vinyl bromide (bromoethene); C2H3Br	593-60-2	106	108
Ethylene oxide; C2H4O	75-21-8	29	44
Ethyl chloride (chloroethane); C2H5Cl	75-00-3	64	66
Acetaldehyde (ethanal); C2H4O	75-07-0	44	29, 43
Vinylidene chloride (1,1-dichloroethylene); C2H2Cl2	75-35-4	61	96
Propylene oxide; C3H6O	75-56-9	58	57
Methyl iodide (iodomethane); CH3I	74-88-4	142	127
Methylene chloride; CH2Cl2	75-09-2	49	84, 86
Methyl isocyanate; C2H3NO	624-83-9	57	56
Allyl chloride (3-chloropropene); C3H5Cl	107-05-1	76	41, 78
Carbon disulfide; CS2	75-15-0	76	44, 78
Methyl tert-butyl ether; C5H12O	1634-04-4	73	41, 53
Propionaldehyde; C2H5CHO	123-38-6	58	29, 57
Ethylidene dichloride (1,1-dichloroethane); C2H4Cl2	75-34-3	63	65, 27
Chloroprene (2-chloro-1,3-butadiene); C4H5Cl	126-99-8	88	53, 90
Chloromethyl methyl ether; C2H5ClO	107-30-2	45	29, 49
Acrolein (2-propenal); C3H4O	107-02-8	56	55
1,2-Epoxybutane (1,2-butylene oxide); C4H8O	106-88-7	42	41, 72
Chloroform; CHCl3	67-66-3	83	85, 47
Ethyleneimine (aziridine); C2H5N	151-56-4	42	43
1,1-Dimethylhydrazine; C2H8N2	57-14-7	60	45, 59
Hexane; C6H14	110-54-3	57	41, 43
1,2-Propyleneimine (2-methylazindine); C3H7N	75-55-8	56	57, 42
Acrylonitrile (2-propenenitrile); C3H3N	107-13-1	53	52
Methyl chloroform (1,1,1 trichloroethane); C2H3Cl3	71-55-6	97	99, 61
Methanol; CH4O	67-56-1	31	29
Carbon tetrachloride; CCl4	56-23-5	117	119
Vinyl acetate; C4H6O2	108-05-4	43	86
Methyl ethyl ketone (2-butanone); C4H8O	78-93-3	43	72

TABLE 2. (continued)

Compound	CAS No.	Primary Ion	Secondary Ion
Benzene; C6H6	71-43-2	78	77,50
Acetonitrile (cyanomethane); C2H3N	75-05-8	41	40
Ethylene dichloride (1,2-dichloroethane); C2H4Cl2	107-06-2	62	64, 27
Triethylamine; C6H15N	121-44-8	86	58, 101
Methylhydrazine; CH6N2	60-34-4	46	31, 45
Propylene dichloride (1,2-dichloropropane); C3H6Cl2	78-87-5	63	41, 62
2,2,4-Trimethyl pentane; C8H18	540-84-1	57	41, 56
1,4-Dioxane (1,4 Diethylene oxide); C4H8O2	123-91-1	88	58
Bis(chloromethyl) ether; C2H4Cl2O	542-88-1	79	49, 81
Ethyl acrylate; C5H8O2	140-88-5	55	73
Methyl methacrylate; C5H8O2	80-62-6	41	69, 100
1,3-Dichloropropene; C3H4Cl2 (cis)	542-75-6	75	39, 77
Toluene; C7H8	108-88-3	91	92
Trichloethylene; C2HCl3	79-01-6	130	132, 95
1,1,2-Trichloroethane; C2H3Cl3	79-00-5	97	83, 61
Tetrachloroethylene; C2Cl4	127-18-4	166	164, 131
Epichlorohydrin (l-chloro-2,3-epoxy propane); C3H5ClO	106-89-8	57	49, 62
Ethylene dibromide (1,2-dibromoethane); C2H4Br2	106-93-4	107	109
N-Nitrso-N-methylurea; C2H5N3O2	684-93-5	60	44, 103
2-Nitropropane; C3H7NO2	79-46-9	43	41
Chlorobenzene; C6H5Cl	108-90-7	112	77, 114
Ethylbenzene; C8H10	100-41-4	91	106
Xylenes (isomer & mixtures); C8H10	1330-20-7	91	106
Styrene; C8H8	100-42-5	104	78, 103
p-Xylene; C8H10	106-42-3	91	106
m-Xylene; C8H10	108-38-3	91	106
Methyl isobutyl ketone (hexone); C6H12O	108-10-1	43	58, 100
Bromoform (tribromomethane); CHBr3	75-25-2	173	171, 175
1,1,2,2-Tetrachloroethane; C2H2Cl4	79-34-5	83	85
o-Xylene; C8H10	95-47-6	91	106
Dimethylcarbamyl chloride; C3H6ClNO	79-44-7	72	107
N-Nitrosodimethylamine; C2H6N2O	62-75-9	74	42
Beta-Propiolactone; C3H4O2	57-57-8	42	43
Cumene (isopropylbenzene); C9H12	98-82-8	105	120
Acrylic acid; C3H4O2	79-10-7	72	45, 55
N,N-Dimethylformamide; C3H7NO	68-12-2	73	42, 44
1,3-Propane sultone; C3H6O3S	1120-71-4	58	65, 122

TABLE 2. (continued)

Compound	CAS No.	Primary Ion	Secondary Ion
Acetophenone; C8H8O	98-86-2	105	77,120
Dimethyl sulfate; C2H6O4S	77-78-1	95	66,96
Benzyl chloride (a-chlorotoluene); C7H7Cl	100-44-7	91	126
1,2-Dibromo-3-chloropropane; C3H5Br2Cl	96-12-8	57	155, 157
Bis(2-Chloroethyl)ether; C4H8Cl2O	111-44-4	93	63, 95
Chloroacetic acid; C2H3ClO2	79-11-8	50	45, 60
Aniline (aminobenzene); C6H7N	62-53-3	93	66
1,4-Dichlorobenzene (p-); C6H4Cl2	106-46-7	146	148, 111
Ethyl carbamate (urethane); C3H7NO2	51-79-6	31	44, 62
Acrylamide; C3H5NO	79-06-1	44	55, 71
N,N-Dimethylaniline; C8H11N	121-69-7	120	77, 121
Hexachloroethane; C2Cl6	67-72-1	201	199, 203
Hexachlorobutadiene; C4Cl6	87-68-3	225	227, 223
Isophorone; C9H14O	78-59-1	82	138
N-Nitrosomorpholine; C4H8N2O2	59-89-2	56	86, 116
Styrene oxide; C8H8O	96-09-3	91	120
Diethyl sulfate; C4H10O4S	64-67-5	45	59, 139
Cresylic acid (cresol isomer mixture); C7H8O	1319-77-3		
o-Cresol; C7H8O	95-48-7	108	107
Catechol (o-hydroxyphenol); C6H6O2	120-80-9	110	64
Phenol; C6H6O	108-95-2	94	66
1,2,4-Trichlorobenzene; C6H3Cl3	120-82-1	180	182, 184
Nitrobenzene; C6H5NO2	98-95-3	77	51, 123

TABLE 3. REQUIRED BFB KEY IONS AND ION ABUNDANCE CRITERIA

Mass	Ion Abundance Criteria[1]
50	8.0 to 40.0 Percent of m/e 95
75	30.0 to 66.0 Percent of m/e 95
95	Base Peak, 100 Percent Relative Abundance
96	5.0 to 9.0 Percent of m/e 95 (See note)
173	Less than 2.0 Percent of m/e 174
174	50.0 to 120.0 Percent of m/e 95
175	4.0 to 9.0 Percent of m/e 174
176	93.0 to 101.0 Percent of m/e 174
177	5.0 to 9.0 Percent of m/e 176

[1]All ion abundances must be normalized to m/z 95, the nominal base peak, even though the ion abundance of m/z 174 may be up to 120 percent that of m/z 95.

TABLE 4. METHOD DETECTION LIMITS (MDL)[1]

TO-14A List	Lab #1, SCAN	Lab #2, SIM
Benzene	0.34	0.29
Benzyl Chloride	--	--
Carbon tetrachloride	0.42	0.15
Chlorobenzene	0.34	0.02
Chloroform	0.25	0.07
1,3-Dichlorobenzene	0.36	0.07
1,2-Dibromoethane	--	0.05
1,4-Dichlorobenzene	0.70	0.12
1,2-Dichlorobenzene	0.44	--
1,1-Dichloroethane	0.27	0.05
1,2-Dichloroethane	0.24	--
1,1-Dichloroethene	--	0.22
cis-1,2-Dichloroethene	--	0.06
Methylene chloride	1.38	0.84
1,2-Dichloropropane	0.21	--
cis-1,3-Dichloropropene	0.36	--
trans-1,3-Dichloropropene	0.22	--
Ethylbenzene	0.27	0.05
Chloroethane	0.19	--
Trichlorofluoromethane	--	--
1,1,2-Trichloro-1,2,2-trifluoroethane		--
1,2-Dichloro-1,1,2,2-tetrafluoroethane	--	--
Dichlorodifluoromethane	--	--
Hexachlorobutadiene	--	--
Bromomethane	0.53	--
Chloromethane	0.40	--
Styrene	1.64	0.06
1,1,2,2-Tetrachloroethane	0.28	0.09
Tetrachloroethene	0.75	0.10
Toluene	0.99	0.20
1,2,4-Trichlorobenzene	--	--
1,1,1-Trichloroethane	0.62	0.21
1,1,2-Trichloroethane	0.50	--
Trichloroethene	0.45	0.07
1,2,4-Trimethylbenzene	--	--
1,3,5-Trimethylbenzene	--	--
Vinyl Chloride	0.33	0.48
m,p-Xylene	0.76	0.08
o-Xylene	0.57	0.28

[1]Method Detection Limits (MDLs) are defined as the product of the standard deviation of seven replicate analyses and the student's "t" test value for 99% confidence. For Lab #2, the MDLs represent an average over four studies. MDLs are for MS/SCAN for Lab #1 and for MS/SIM for Lab #2.

TABLE 5. SUMMARY OF EPA DATA ON REPLICATE PRECISION (RP) FROM EPA NETWORK OPERATIONS[1]

Monitoring Compound Identification	EPA's Urban Air Toxics Monitoring Program (UATMP)			EPA's Toxics Air Monitoring Stations (TAMS)		
	%RP	#	ppbv	%RP	#	ppbv
Dichlorodifluoromethane	--		--	13.9	47	0.9
Methylene chloride	16.3	07	4.3	19.4	47	0.6
1,2-Dichloroethane	36.2	31	1.6	--	--	--
1,1,1-Trichloroethane	14.1	44	1.0	10.6	47	2.0
Benzene	12.3	56	1.6	4.4	47	1.5
Trichloroethene	12.8	08	1.3	--	--	--
Toluene	14.7	76	3.1	3.4	47	3.1
Tetrachloroethene	36.2	12	0.8	--	--	--
Chlorobenzene	20.3	21	0.9	--	--	--
Ethylbenzene	14.6	32	0.7	5.4	47	0.5
m-Xylene	14.7	75	4.0	5.3	47	1.5
Styrene	22.8	59[2]	1.1	8.7	47	0.2[2]
o-Xylene	--		--	6.0	47	0.5
p-Xylene	--					
1,3-Dichlorobenzene	49.1	06	0.6	--	--	--
1,4-Dichlorobenzene	14.7	14	6.5	--	--	--

[1]Denotes the number of replicate or duplicate analysis used to generate the statistic. The replicate precision is defined as the mean ratio of absolute difference to the average value.
[2]Styrene and o-xylene coelute from the GC column used in UATMP. For the TAMS entries, both values were below detection limits for 18 of 47 replicates and were not included in the calculation.

TABLE 6. AUDIT ACCURACY (AA) VALUES[1] FOR SELECTED COMPENDIUM METHOD TO-14A COMPOUNDS

Selected Compounds From TO-14A List	FY-88 TAMS AA(%), N=30	FY-88 UATMP AA(%), N=3
Vinyl chloride	4.6	17.9
Bromomethane	--	6.4
Trichlorofluoromethane	6.4	--
Methylene chloride	8.6	31.4
Chloroform	--	4.2
1,2-Dichloroethane	6.8	11.4
1,1,1-Trichloroethane	18.6	11.3
Benzene	10.3	10.1
Carbon tetrachloride	12.4	9.4
1,2-Dichloropropane	--	6.2
Trichloroethene	8.8	5.2
Toluene	8.3	12.5
Tetrachloroethene	6.2	--
Chlorobenzene	10.5	11.7
Ethylbenzene	12.4	12.4
o-Xylene	16.2	21.2

[1]Audit accuracy is defined as the relative difference between the audit measurement result and its nominal value divided by the nominal value. N denotes the number of audits averaged to obtain the audit accuracy value. Information is not available for other TO-14A compounds because they were not present in the audit materials.

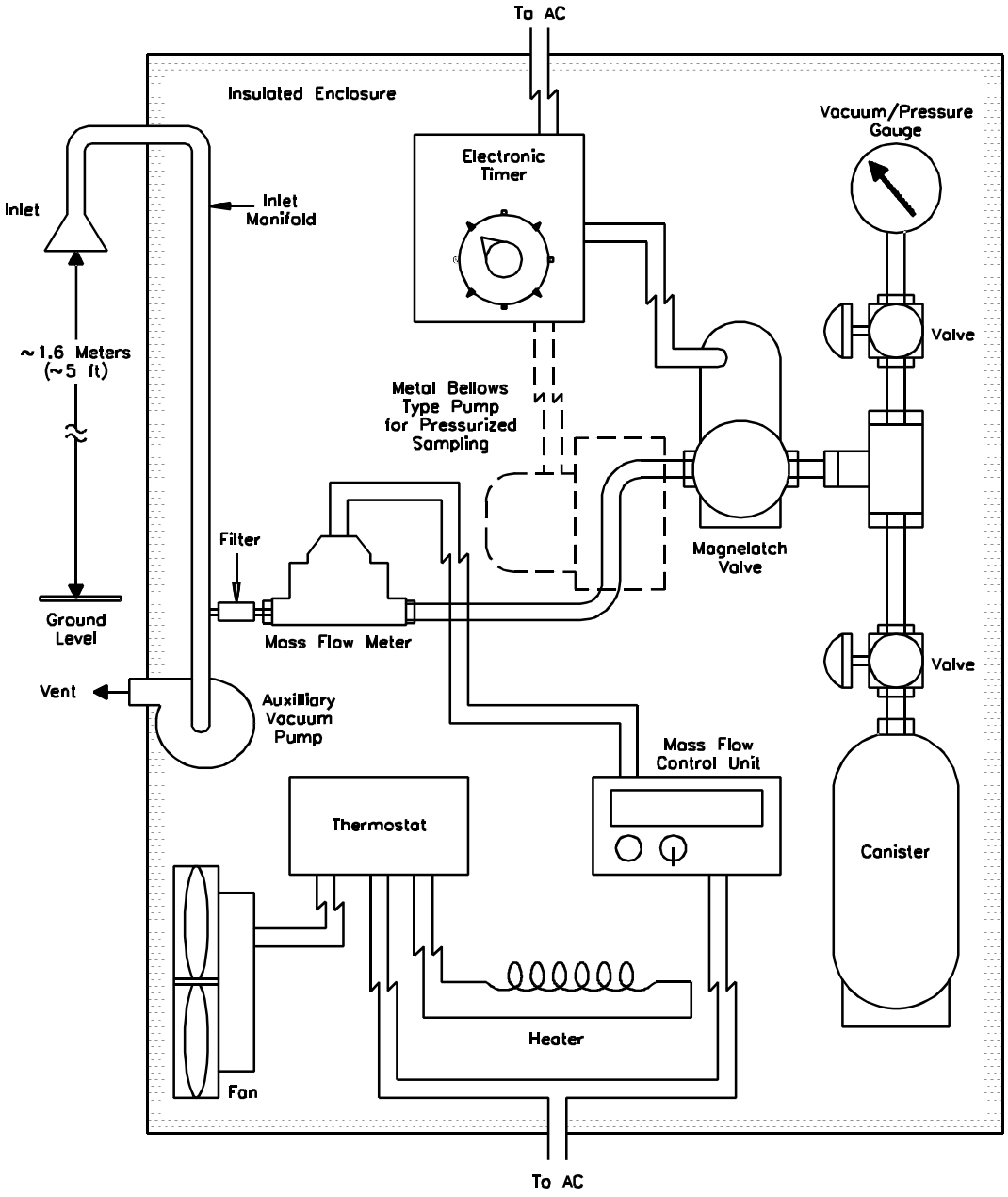

Figure 1. Sampler configuration for subatmospheric pressure or pressurized canister sampling.

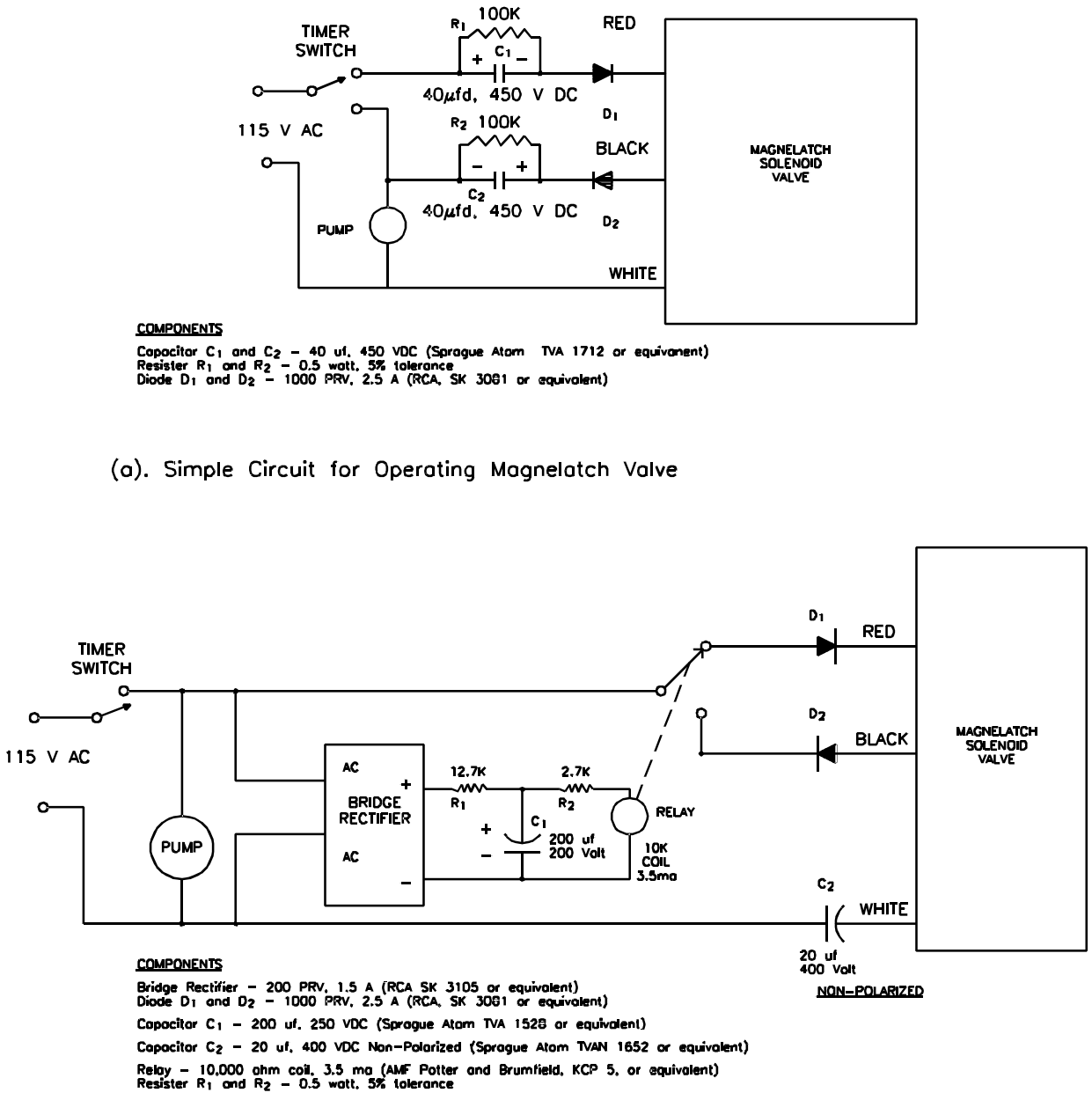

Figure 2. Electrical pulse circuits for driving Skinner magnelatch solenoid valve with mechanical timer.

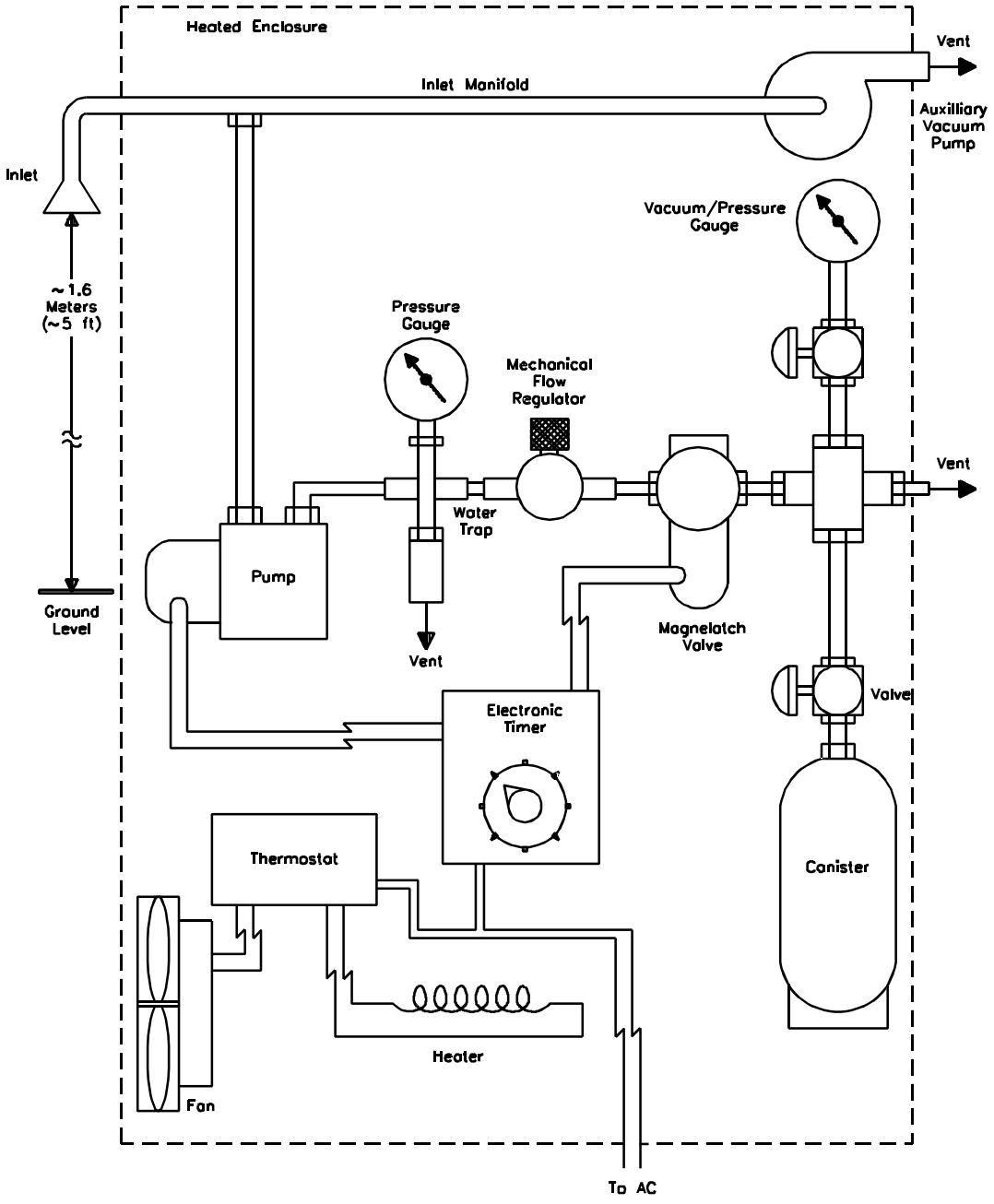

Figure 3. Alternative sampler configuration for pressurized canister sampling.

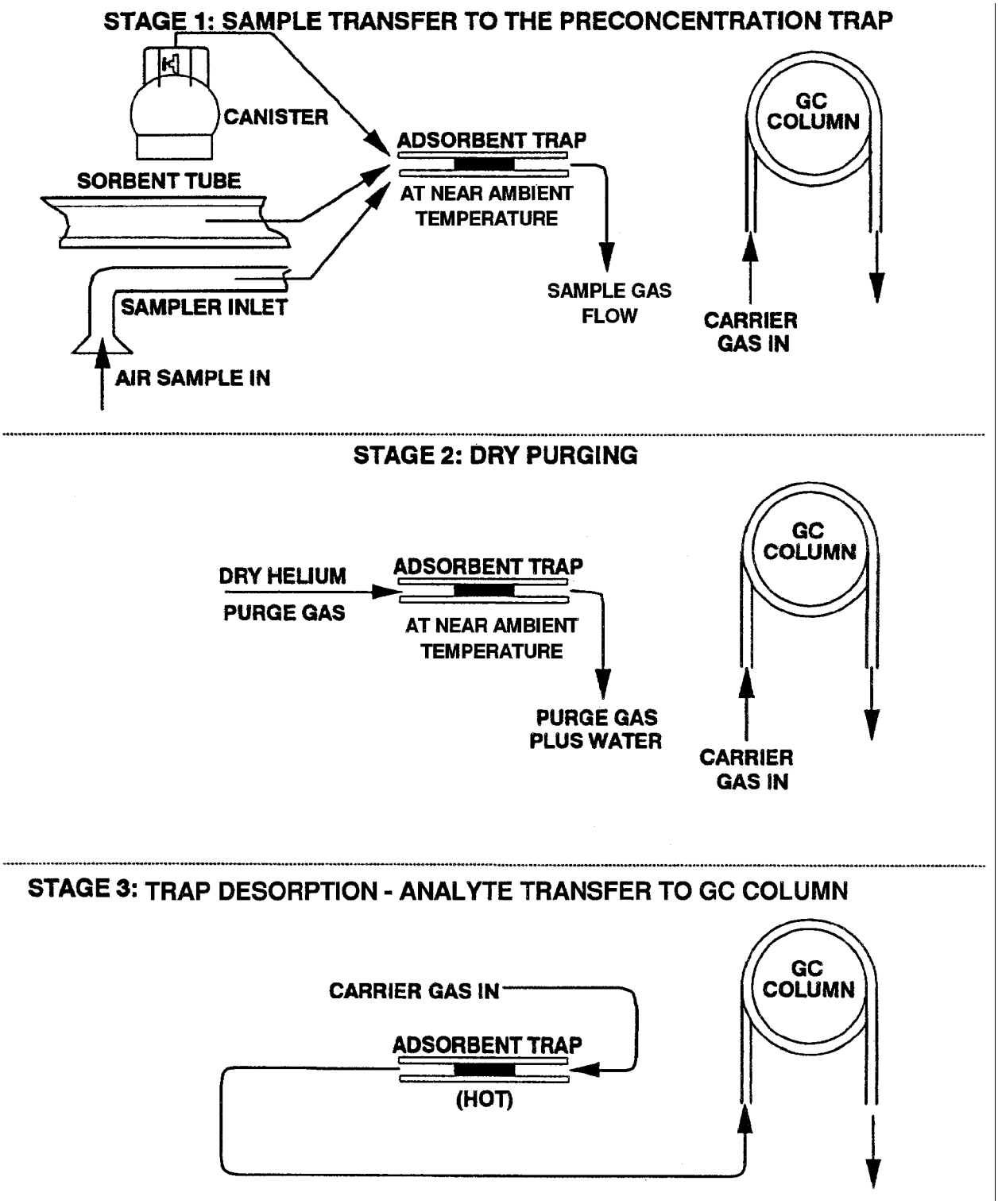

Figure 4. Illustration of three stages of dry purging of adsorbent trap.

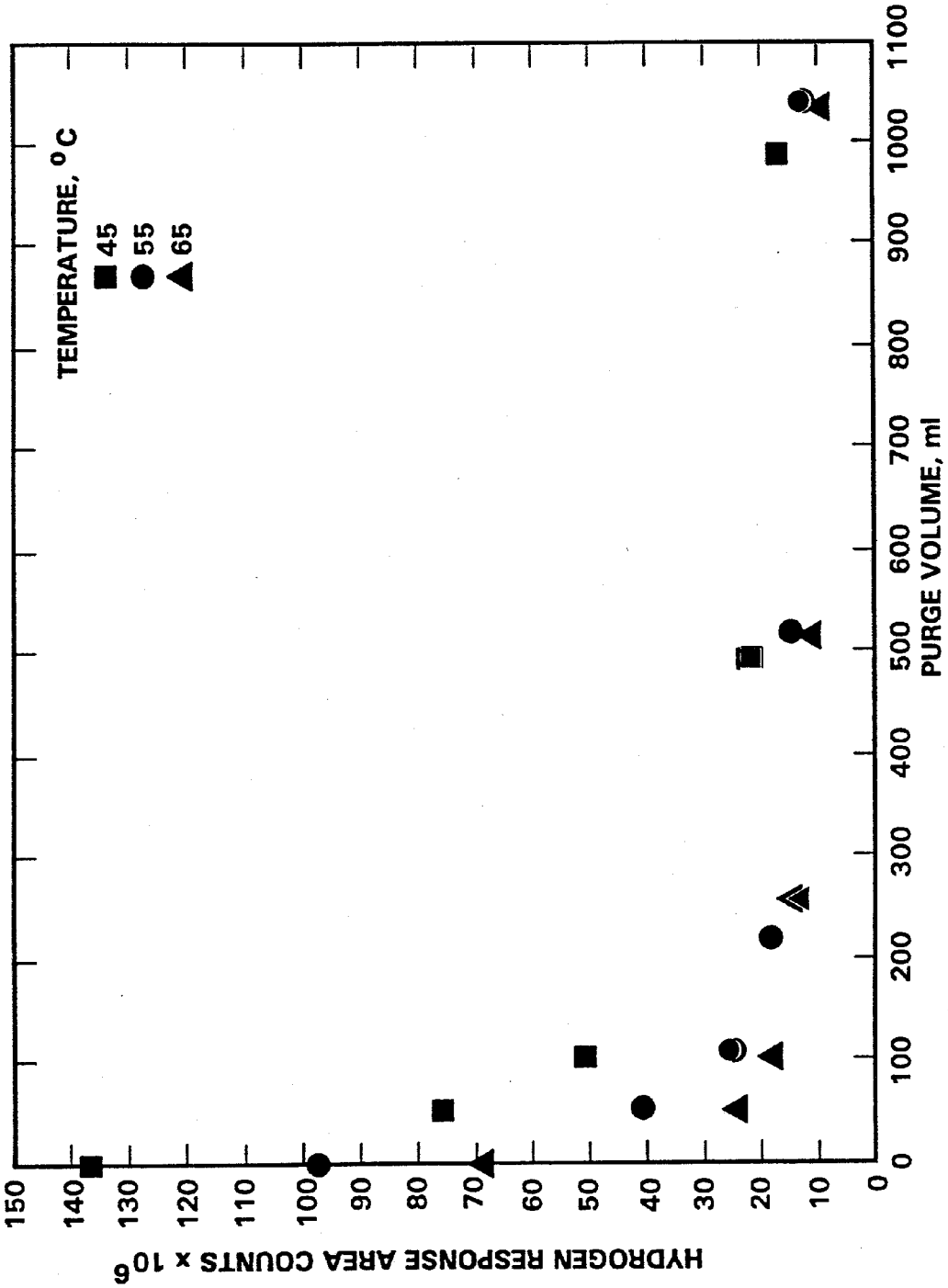

Figure 5. Residual water vapor on VOC concentrator vs. dry He purge volume.

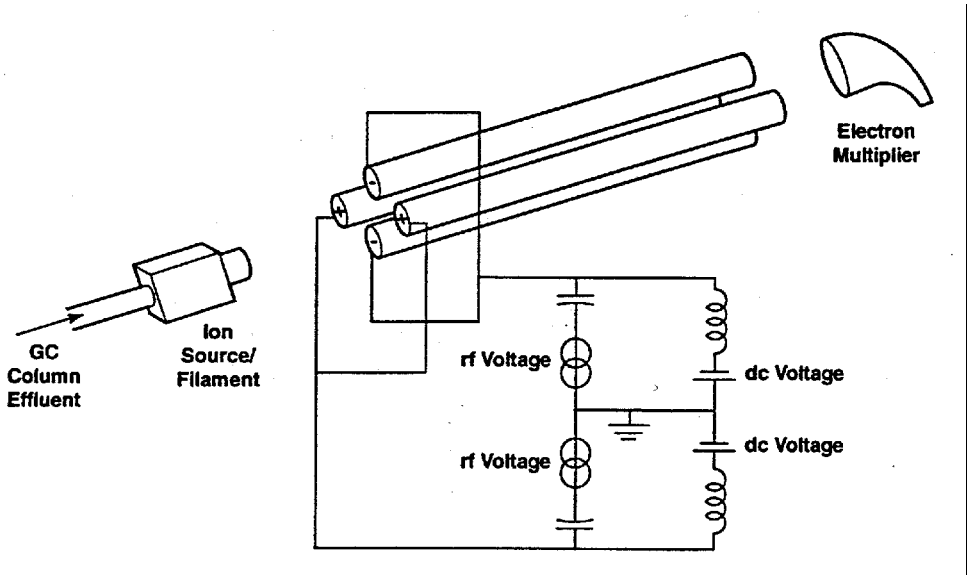

Figure 6. Simplified diagram of a quadrupole mass spectrometer.

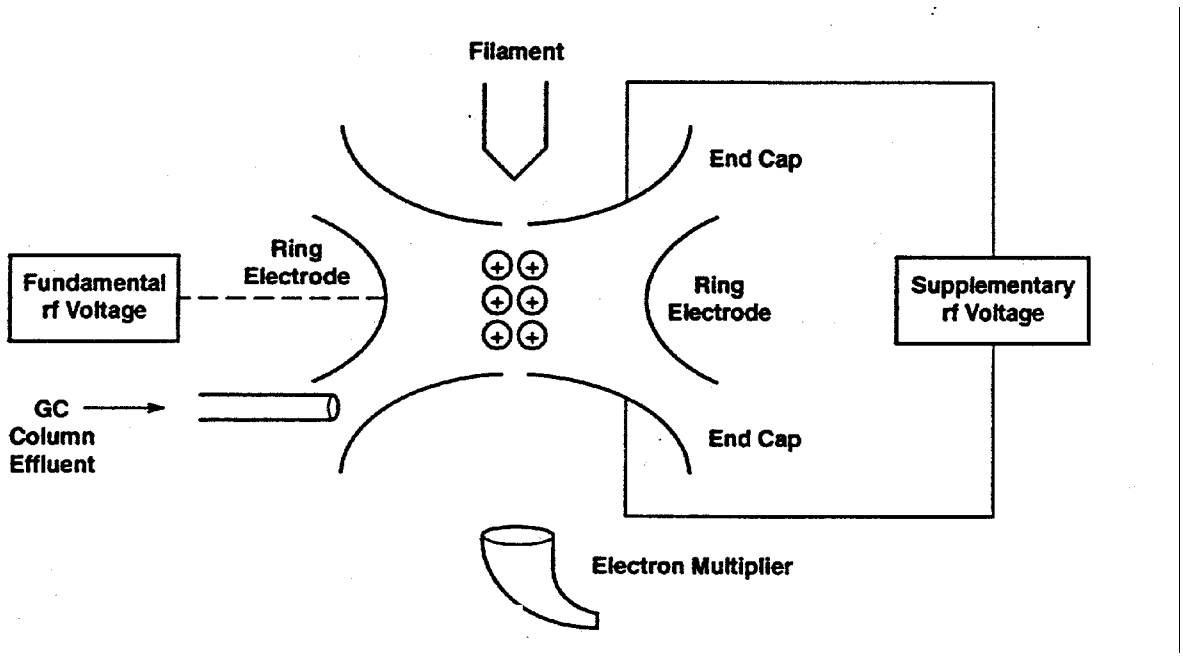

Figure 7. Simplified diagram of an ion trap mass spectrometer.

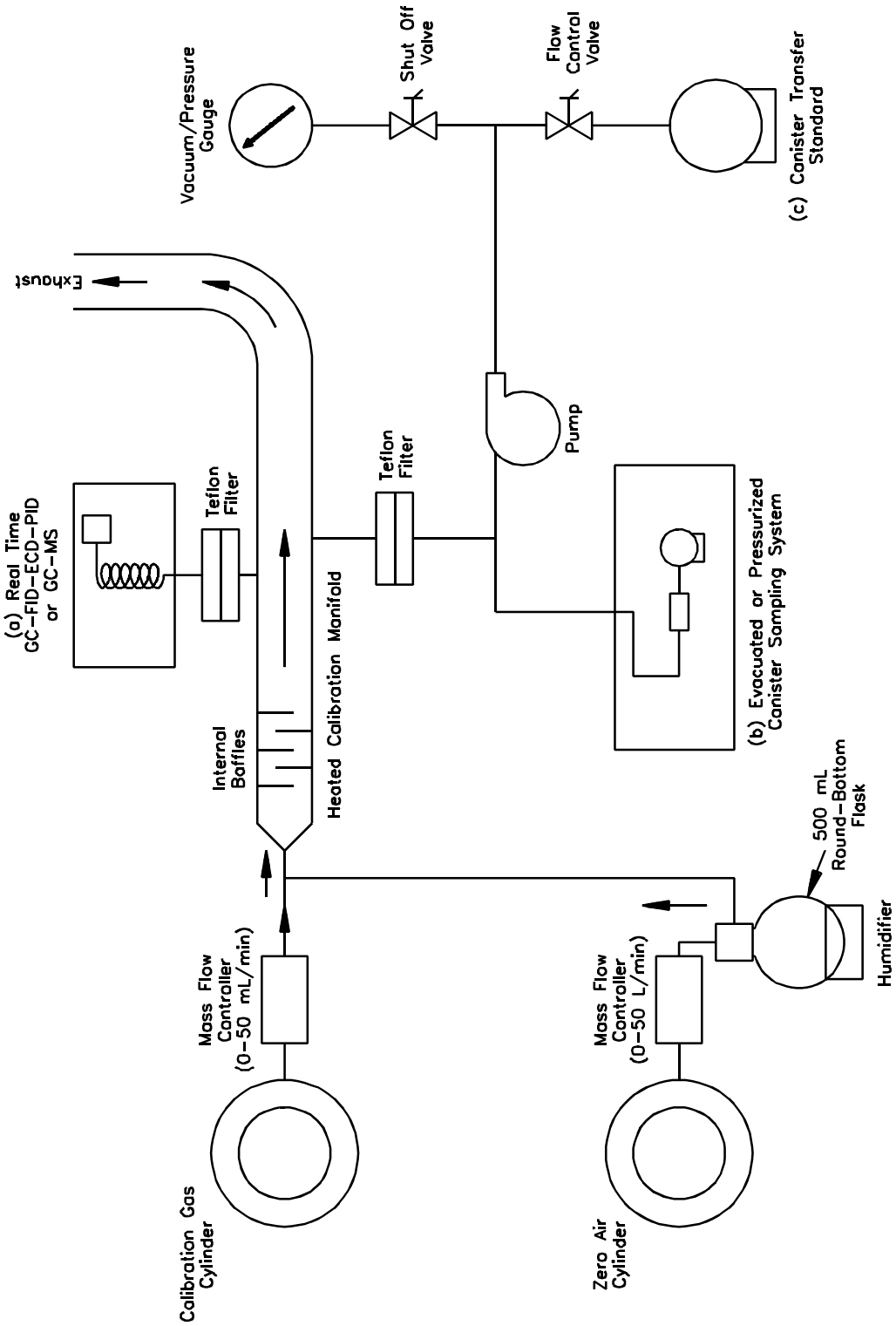

Figure 8. Schematic diagram of calibration system and manifold for (a) analytical system calibration, (b) testing canister sampling system and (c) preparing canister transfer standards.

COMPENDIUM METHOD TO-15
CANISTER SAMPLING FIELD TEST DATA SHEET

A.GENERAL INFORMATION

SITE LOCATION: _____
SITE ADDRESS: _____
_____
SAMPLING DATE: _____

SHIPPING DATE: _____
CANISTER SERIAL NO.: _____
SAMPLER ID: _____
OPERATOR: _____
CANISTER LEAK
CHECK DATE: _____

B. SAMPLING INFORMATION

TEMPERATURE

	INTERIOR	AMBIENT	MAXIMUM	MINIMUM
START				
STOP				

PRESSURE

CANISTER PRESSURE	

SAMPLING TIMES

	LOCAL TIME	ELAPSED TIME METER READING
START		
STOP		

FLOW RATES

MANIFOLD FLOW RATE	CANISTER FLOW RATE	FLOW CONTROLLER READOUT

SAMPLING SYSTEM CERTIFICATION DATE: _____
QUARTERLY RECERTIFICATION DATE: _____

C. LABORATORY INFORMATION

DATA RECEIVED: _____
RECEIVED BY: _____
INITIAL PRESSURE: _____
FINAL PRESSURE: _____
DILUTION FACTOR: _____
ANALYSIS
GC-FID-ECD DATE: _____
GC-MSD-SCAN DATE: _____
GC-MSD-SIM DATE: _____
RESULTS*: _____
_____
GC-FID-ECD: _____
GC-MSD-SCAN: _____
GC-MSD-SIM: _____

_____
SIGNATURE/TITLE

Figure 9. Canister sampling field test data sheet (FTDS).

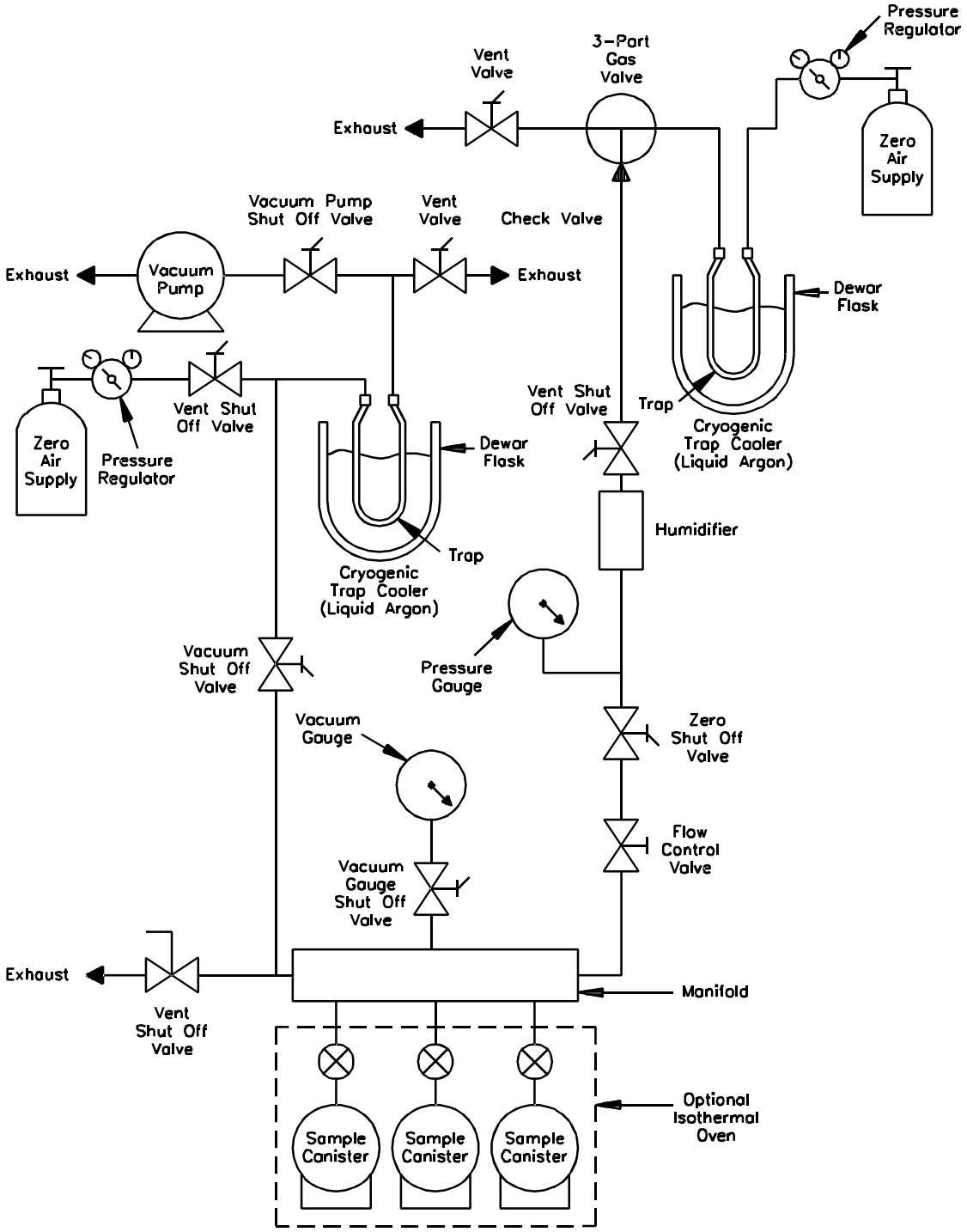

Figure 10. Canister cleaning system.

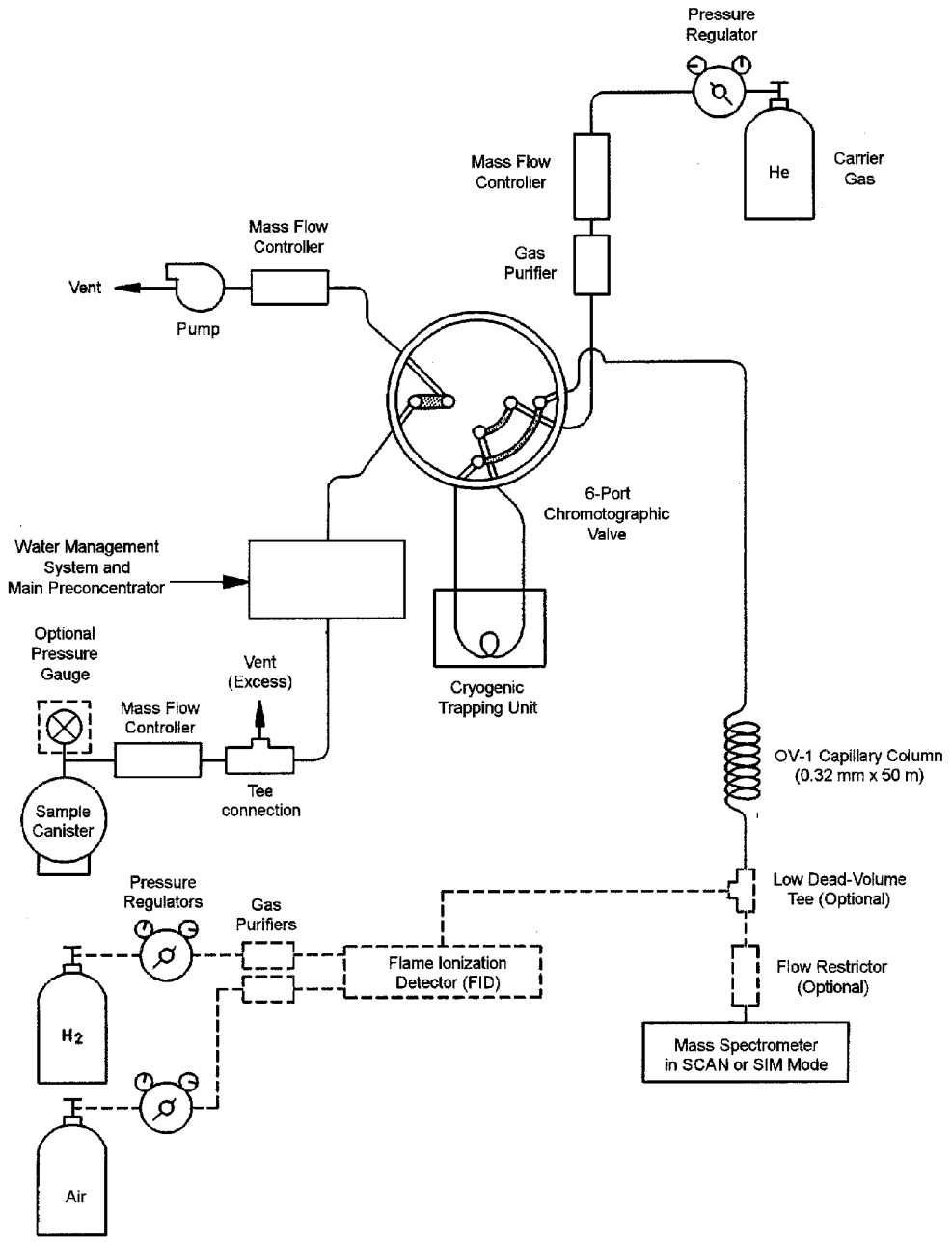

Figure 11. Canister analysis utilizing GC/MS/SCAN/SIM analytical system with optional flame ionization detector with 6-port chromatographic valve in the sample desorption mode.
[Alternative analytical system illustrated in Figure 16.]

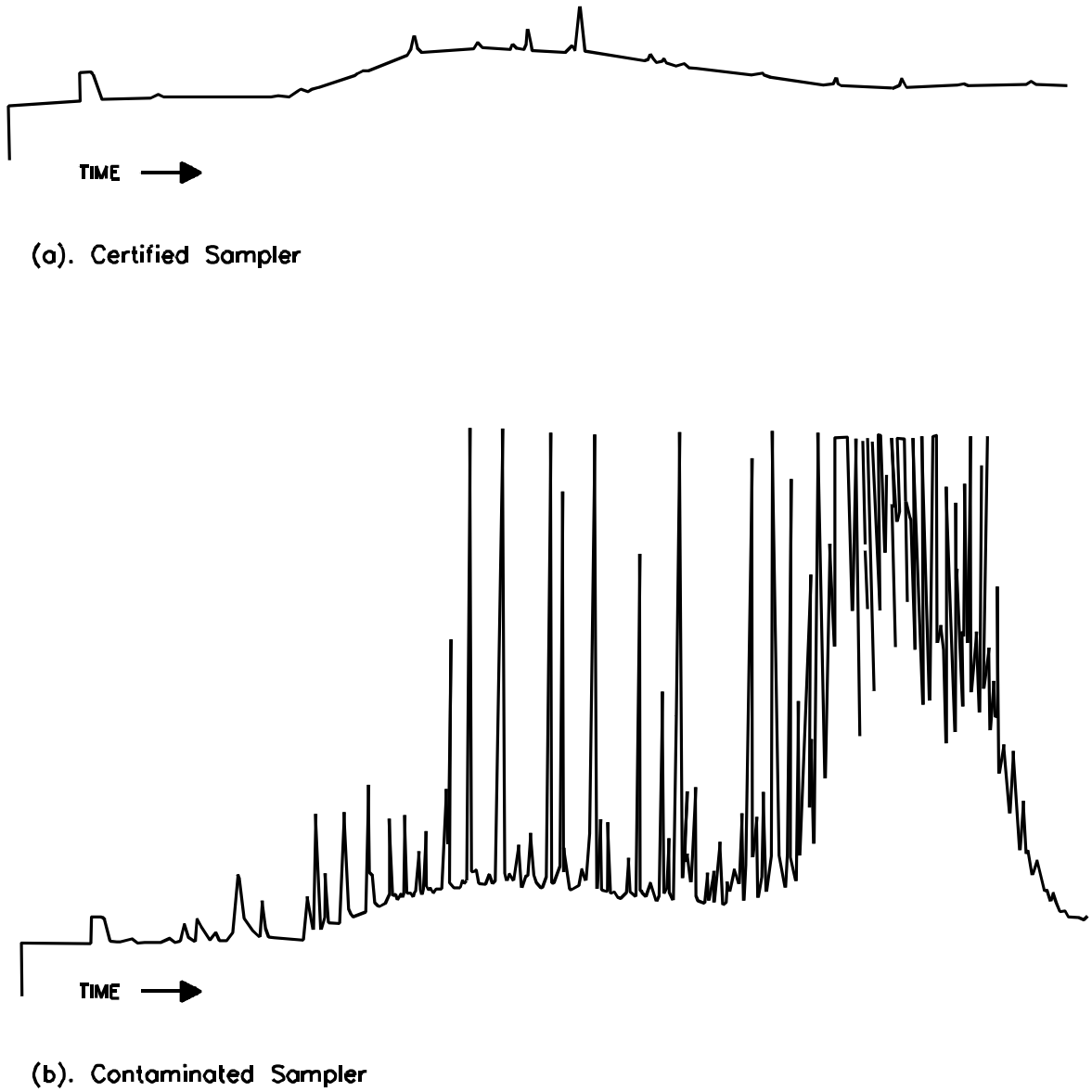

Figure 12. Example of humid zero air test results for a clean sample canister (a) and a contaminated sample canister (b).

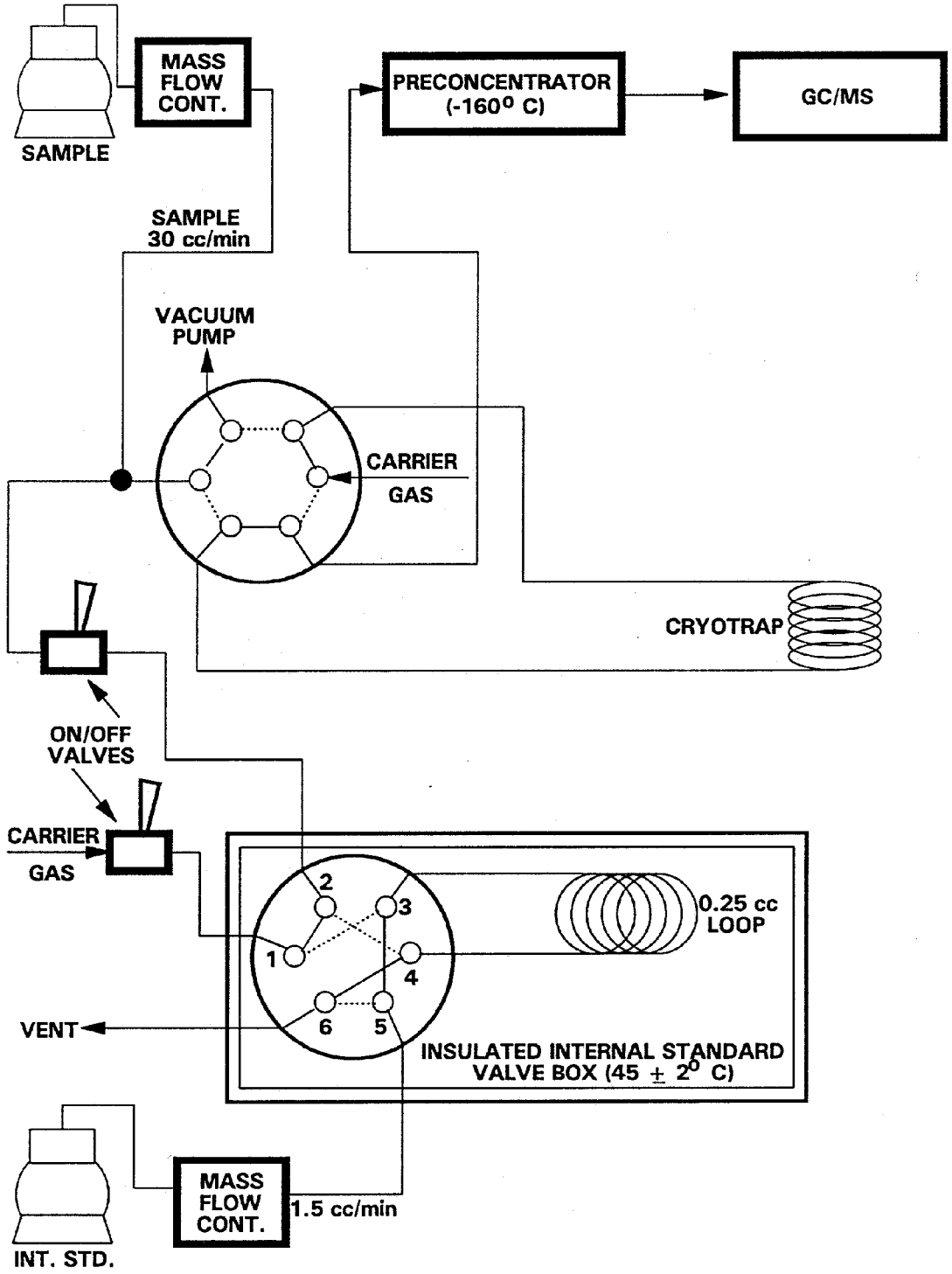

Figure 13. Diagram of design for internal standard addition.

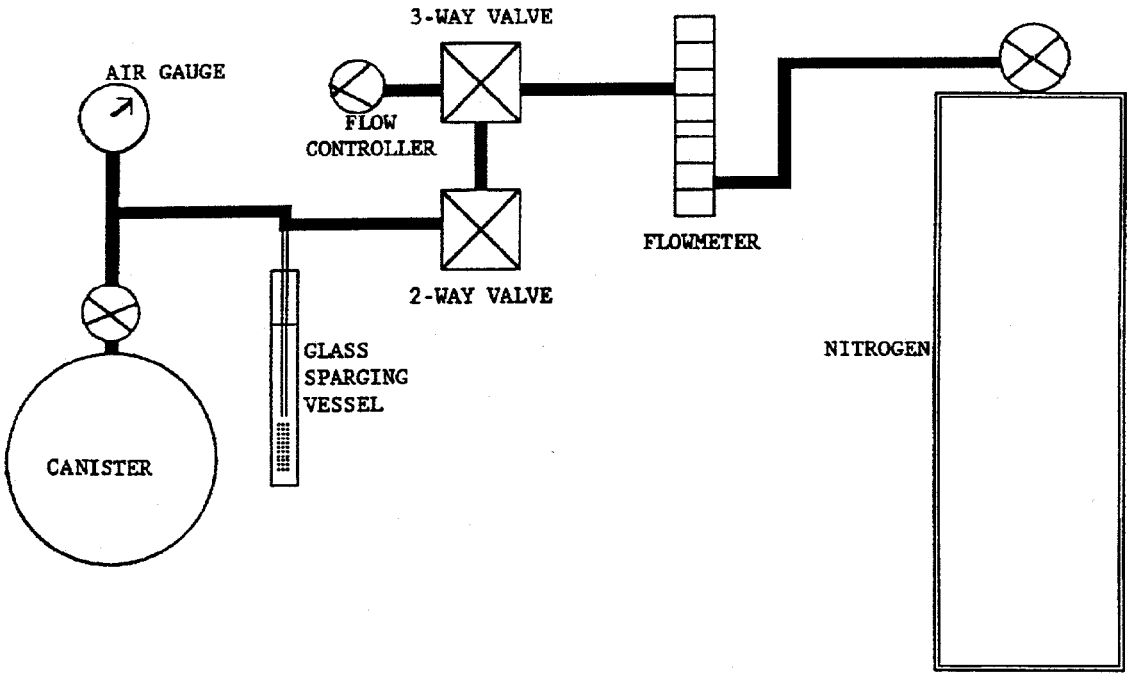

Figure 14. Water method of standard preparation in canisters.

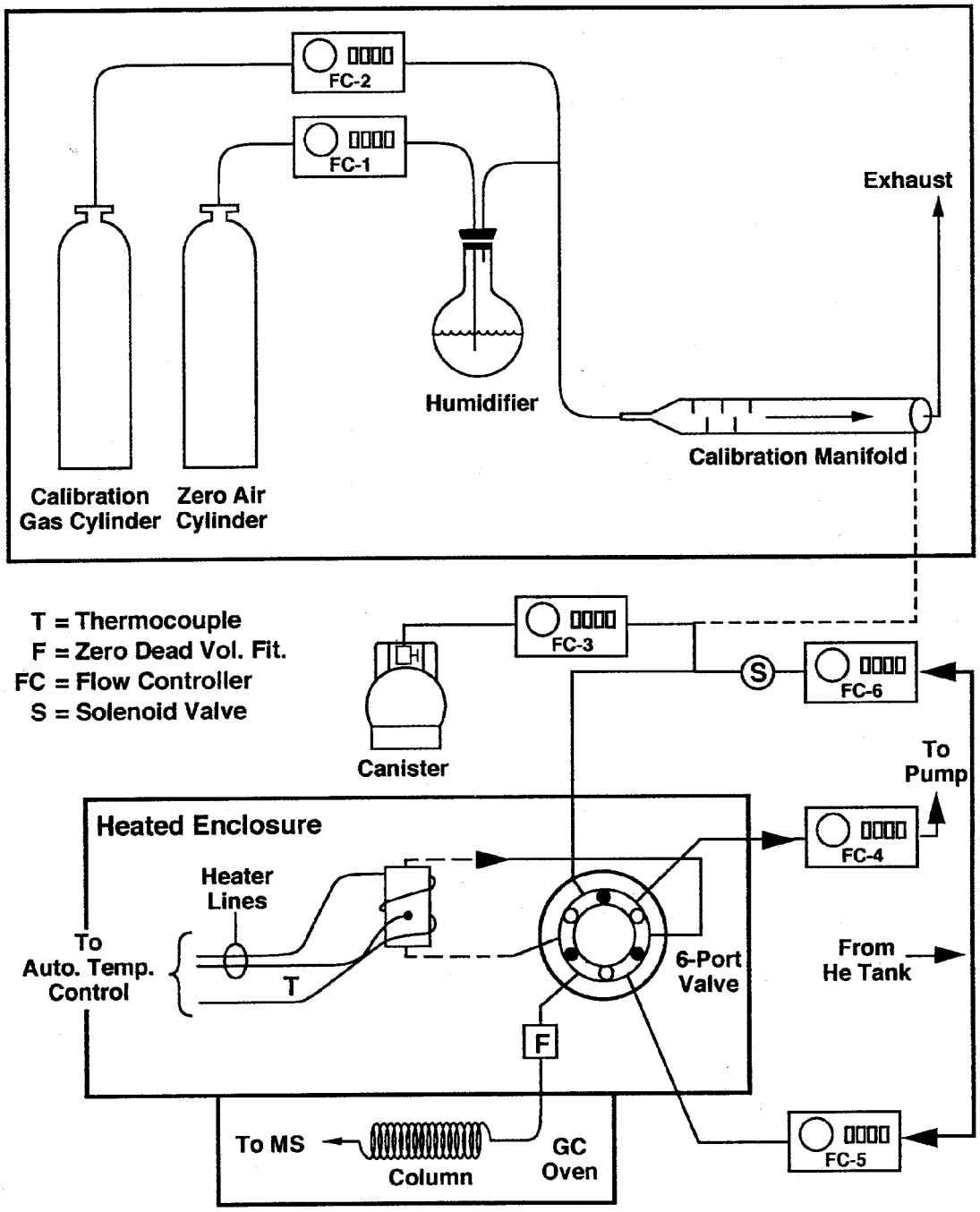

Figure 15. Diagram of the GC/MS analytical system.

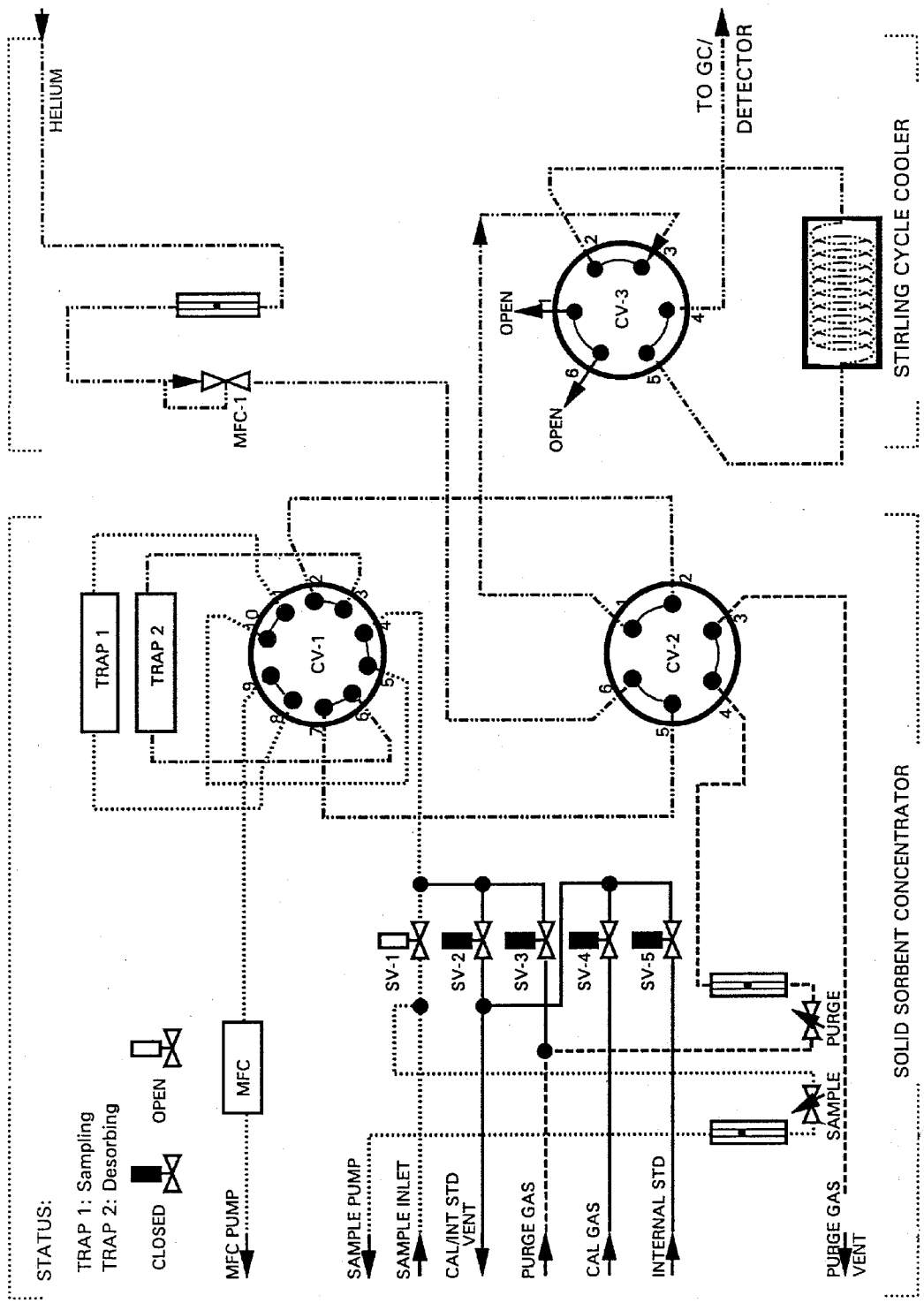

Figure 16. Sample flow diagram of a commercially available concentrator showing the combination of multisorbent tube and cooler (Trap 1 sampling; Trap 2 desorbing).

APPENDIX D
Organic Vapor Meter (OVM) / Datalogger
Instruction Manual

MODEL 580B

ORGANIC VAPOR METER (OVM) / DATALOGGER

INSTRUCTION MANUAL
P/N 16860

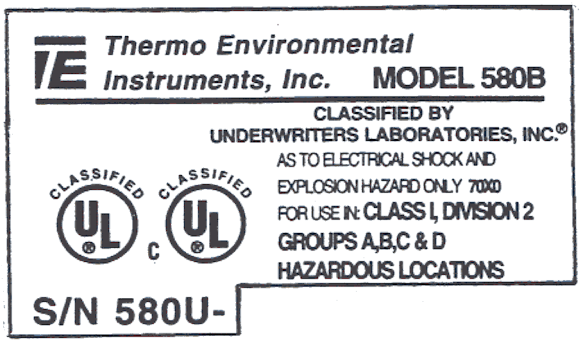

THIS EQUIPMENT IS SUITABLE FOR USE IN CLASS I, DIVISION 2, GROUPS (AS APPLICABLE) OR NON-HAZARDOUS LOCATIONS ONLY.

WARNING - EXPLOSION HAZARD - SUBSTITUTION OF COMPONENTS MAY IMPAIR SUITABILITY FOR CLASS I, DIVISION 2.

THERMO ENVIRONMENTAL INSTRUMENTS INC
8 WEST FORGE PARKWAY
FRANKLIN, MASSACHUSETTS 02038

TELEPHONE: (508) 520-0430
FACSIMILE: (508) 520-1460

1-9-96

INSTRUMENT WARRANTY

WARRANTY. Subject to the exceptions stated below, Thermo Environmental Instruments Inc. agrees to correct, either by repair or at our opinion, by replacement, any defects in materials or workmanship which develop within one year from the date of surface shipment, parts and labor supplied free of charge and surface transportation costs to be borne by the offeror both ways, provided that the investigation and inspection defects developed under normal and proper use.

The exceptions mentioned above are: (1) All items claimed must be returned to Thermo Environmental Instruments Inc., transportation charges collect, and will be shipped prepaid and charged to the customer unless the item is found to be defective and covered by the warranty in which case Thermo Environmental Instruments Inc. will pay all surface transportation charges; (2) Thermo Environmental Instruments Inc. agrees to extend to the customer whatever warranty is given to Thermo Environmental Instruments Inc. and incorporated into products sold to the customer; (3) Thermo Environmental Instruments Inc. shall be released from all obligations under this warranty in the event repairs or modifications are made by persons other than its own authorized service personnel, or service personnel from an authorized representative, unless such repair is minor, merely the installation of a new plug-in component; (4) If any model or sample was shown to the Purchaser, such model or sample was shown merely to illustrate the article and not to represent that any article delivered hereunder would conform to the model or sample; and (5) Spare parts are warranted for ninety (90) days.

THE FOREGOING WARRANTY IS EXCLUSIVE AND IN LIEU OF ALL OTHER WARRANTIES, WHETHER WRITTEN, ORAL, IMPLIED OR STATUTORY. SELLER DOES NOT WARRANT MERCHANTABILITY OR FITNESS FOR ANY PARTICULAR PURPOSE, OR MAKE ANY OTHER WARRANTY OR AGREEMENT EXPRESSED OR IMPLIED WITH RESPECT TO ANY ARTICLES COVERED HEREUNDER. tHERE ARE NO WARRANTIES WHICH EXTEND BEYOND THOSE EXPRESSLY STATED IN THIS CONTRACT.

580B USER MANUAL
TABLE OF CONTENTS

Section		Page
1	**Introduction**	
	1.1 About this manual	1-1
	1.2 Instrument Overview	1-1
	1.3 580B Features	1-3
2	**Principle of Operation**	
	2.1 Photoionization Detector Operation Strategy	2-1
	2.2 Program Operation	2-4
	2.3 Main Menu	2-7
	2.4 Parameters Mode	2-8
	2.5 Access Mode	2-13
	2.6 Clock Mode	2-15
	2.7 Communication Mode	2-15
	2.8 Battery/Charger	2-17
3	**Service/Hardware**	
	3.1 Lamp Insertion and Removal	3-1
	3.2 Calibration	3-4
	3.3 Charge	3-4
4	**Calibration**	
	4.1 General	4-1
	4.2 Factory Calibration Test of Model 580B	4-1
	4.3 Methods of Generating Concentrations of Various Materials in Air	4-1
	4.4 580B Calibration	4-7
	4.5 Determination of Response Factors	4-8
5	**Applications**	
	5.1 General	5-1
	5.2 Vinyl Chloride Monomer	5-1
	5.3 Monitoring Isolated Plant Areas for Toluene and Methyl Isobutyl Ketone	5-2
	5.4 Petroleum Ether Vapor in Workspace Air	5-4
	5.5 Leak Sourcing	5-5
	5.6 Afterburner Efficiency	5-5
	5.7 Sample Collection of Unknown Environments	5-6
6	**Collection Techniques**	
	6.1 General	6-1
	6.2 Bag Sample Collection	6-2
	6.3 Collection Using Charcoal Tubes	6-3

7	**Communication**	
	7.1 Printer	**7-1**
	7.2 Computer	**7-1**
	7.3 Communication Software	**7-1**
8	**Flow Chart**	
	8.1 Quick Start-up	**8-1**
	8.2 Detailed Flow Chart	**8-1**
A	**Communication**	
	A.1 Introduction	**A-1**
	A.2 Printer Mode Interface	**A-1**
	A.3 Computer Mode Interface	**A-2**
B	**Schematics**	
C	**580B Block Diagram**	
D	**Material List and Silkscreen**	
E	**580B Detailed Drawing**	
F	**Common Organic Solvents and Gases Data Sheet**	
G	**Variable Dilution Probe Assembly Drawing**	
	G.1 General	**G-1**
	G.2 Technical Consideration	**G-1**
	G.3 Calibration of the Dilution Probe	**G-1**
H	**Probe Extension**	
I	**Water Trap**	
J	**Revised Documents**	
K	**RS-232 Information Sheet**	

SECTION I

INTRODUCTION

1 INTRODUCTION

The 580B is a portable Organic Vapor Meter (OVM), which detects and quantitates most organic vapors with a highly sensitive photoionization detector (PID). The 580B has an operating range of 0-2000 parts per million (ppm) with a minimum detectable of 0.1 ppm. No support gases are required.

The 580B is controlled by a microprocessor which provides many features that were not previously available. Maximum signal hold, detector linearization, overrange lockout, IBM PC (or compatible) interface, extensive data logging capabilities and much more. With the many features provided by the 580B leak detection, head space measurements, and field survey are all easily accomplished. Completely portable, the 580B operates from internal batteries for eight hours in the field.

1.1 ABOUT THIS MANUAL

This manual is broken down into eight chapters. The first chapter (this one) provides a general overview of the 580B. Chapter two discusses, in great detail, the extensive facilities of the 580B. The focus of this chapter is on how to use the seven switches to access the various facilities. Chapter three explains, in detail, how to perform routine maintenance on the 580B. Chapter four is a technical discussion of calibration and methods for generating standards. Chapter five is a technical discussion of a few applications which illustrate some of the uses of the 580B. Chapter six is a technical discussion of methods for collecting a sample using the 580B. Chapter seven is a discussion of the communication facilities provided by the 580B. Chapter eight contains two flow charts which illustrate the 580B software flow. This chapter is a helpful tool for the new user. Appendix A is a detailed explanation of the 580B communication protocol. This chapter is provided in order to allow a programmer to develop specialized communication software for the 580B. There are several other addendums which contain miscellaneous information about the 580B.

1.2 INSTRUMENT OVERVIEW

This section describes various points of interest on the 580B. Each number refers to a number in Figure 1.1.

1. **POWER PLUG** - The power plug is used to run the instrument from its internal batteries. There is a chain attached to the power plug so that it will not be lost.

2. **RS-232 CONNECTOR** - This connector is used for communi-

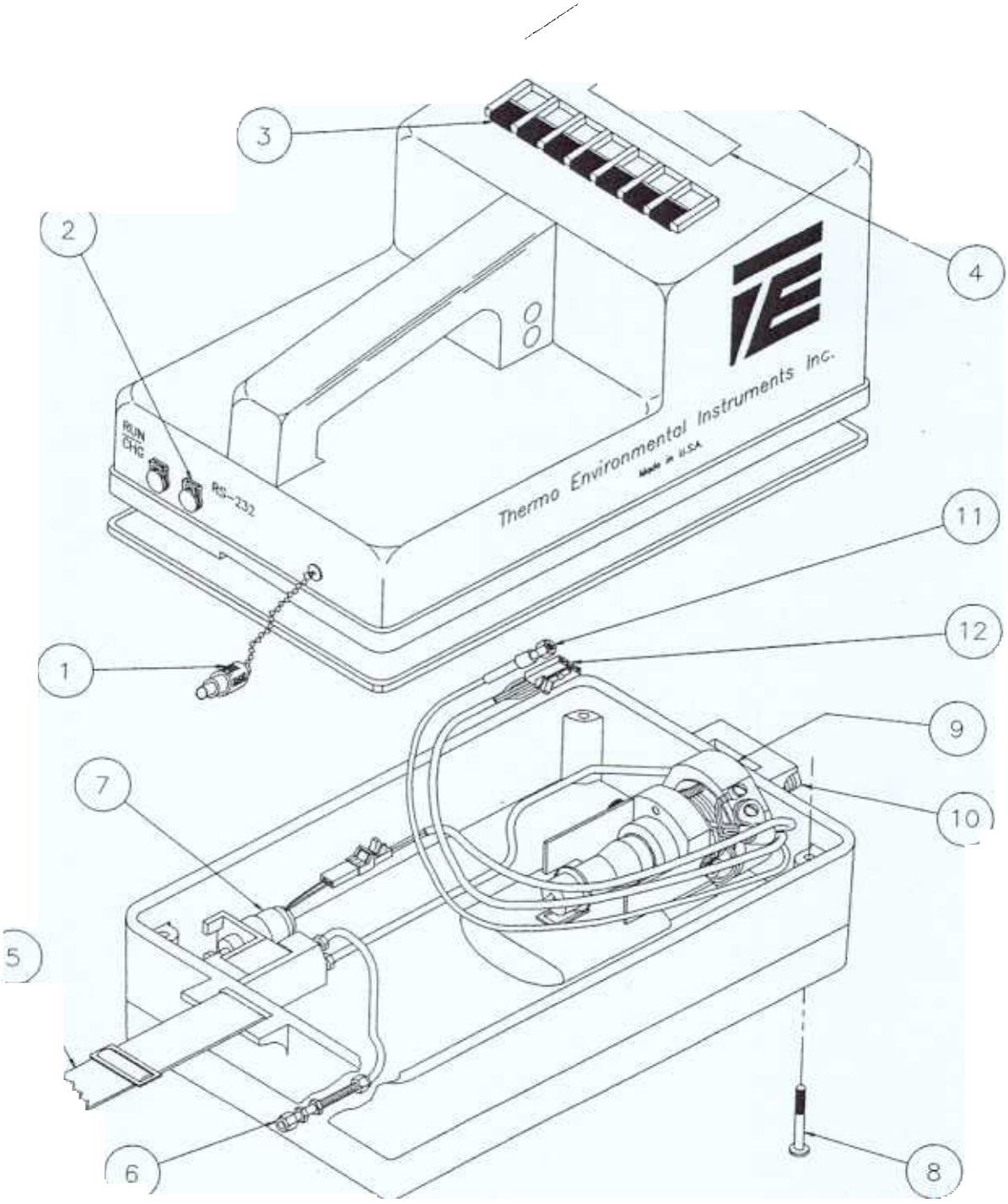

Figur
rumen As: emb

cation with a serial printer or computer. A communication cable provided with the instrument fits into the receptacle.

3. **KEY PAD** - There are seven switches which operate the 580B. The switch marked ON/OFF is used to turn the pump and lamp on and off. The switch marked LIGHT will turn on backlighting for the two line display. The other five switches perform various functions. For a detailed description of the function of each switch see chapter two or the flow charts in chapter eight.

4. **DISPLAY** - The 580B has a two line by sixteen character display.

5. **SHOULDER STRAP** - There is an adjustable shoulder strap for carrying the 580B.

6. **SAMPLE EXIT PORT** - The 580B sample is drawn into the detector by a positive displacement pump and then sent back out through the exit port.

NOTE : The photoionization detector is a non destructive detector so the sample may be collected at the exit for further analysis (see Chapter Six).

7. **PUMP** - The 580B pump draws the sample into the detector.

8. **MOUNTING SCREWS** - There are four captive screws which hold the 580B top and bottom together. The screws are specially designed so that they do not fall out when they are loosened out of the case top.

9. **DETECTOR** - The photoionization detector is shown with the lamp and high voltage power supply.

10. **SAMPLE INLET** - Sample is drawn into the detector through the sample inlet at the front of the 580B.

11. **SIGNAL CABLE** - The PID signal is brought up to the microprocessor, for analysis, via the coaxial signal cable.

12. **BASE HARNESS** - The base harness plugs into a connector on the case top.

1.3 580B FEATURES

This section provides a brief overview of the various features of the 580B. After reading this section the user should have a good idea of what the instrument can do. Chapters two and three will explain, in detail, how each feature is selected.

TURNING ON PUMP AND LAMP - The pump and lamp are turned on by pressing the ON/OFF switch (the instrument power must already be on).

CALIBRATION - Calibration of the 580B is extremely impor-

tant. Chapter two explains how to calibrate the 580B in great detail. Chapter four discusses at length some of the basic theory and methods behind calibration. It is strongly suggested that this chapter be read in order to gain a deeper understanding of usage of the 580B. Chapter three also discusses calibration.

CONCENTRATIONS - Once the lamp and pump have been turned on the 580B begins to display the concentration of the incoming sample on the bottom line of the display. Normally the top line of the display will be a bar graph (logarithmic on a scale of zero to 2000). The operator may however select the MAX HOLD mode of operation. When in MAX HOLD, the top line of the display will show the highest concentration recorded.

LOGGING - The 580B provides extensive facilities for logging information. The operator may save a particular reading along with a six digit location code and a date and time stamp. If the 580B is in the MAX HOLD mode when logging is initiated then the max hold value will be logged.

AUTO LOGGING - Logging may be performed automatically by using the 580B's auto logging feature. Auto logging is not allowed while in the MAX HOLD mode. When auto logging is selected a LOGGING INTERVAL is selected (anywhere from one second to 99 minutes and 59 seconds). At the end of each logging interval the present concentration will be logged (the location code is automatically incremented each time).

AVERAGE - The 580B normally updates the concentration once per second. The operator has the option of setting the averaging time anywhere from one second up to four minutes.

NOTE : The bottom line of the display will be blank until the first averaging interval is completed. The top line will however be updated each second.

RESPONSE FACTOR - A response factor may be used in order to relate a particular gas to the calibration gas. When computing the displayed concentration the microprocessor multiplies the measured concentration by the response factor and displays the result. If the response factor is one, then the concentration is not changed. Chapters four and five explain some uses of the response factor.

LAMP SELECTION - The 580B allows for calibration data to be saved for one 10.0 eV lamp and one 11.8 eV lamp. This allows lamps to be switched in the field without requiring recalibration. A lamp serial number may also be entered.

ALARM - An alarm level may be selected. The 580B will sound an audible alarm (the top line will also indicate an alarm) whenever the concentration goes above the selected alarm level.

ACCESS - The 580B provides four access levels so that various features may be "locked out." User identification number

and instrument number are also provided.

CLOCK - The 580B has an internal clock which will run even when the instrument power is cut off.

COMMUNICATION - The 580B has a serial communication port for outputing data to a serial printer. Many of the 580B features may be accessed from a remote computer through the serial communication port (there is communication software available which will run on an IBM PC or clone).

DISPLAY LOGGED DATA - The logged data may be displayed on the 580B's two line display.

SECTION II

PRINCIPAL OF OPERATION

PHOTOIONIZATION DETECTOR OPERATION & THEORY

1 GENERAL

The sample is drawn into the ion chamber by a pump down stream of the detector. Here the sample is bombarded by ultra-violet light (UV) exciting the molecule. If the energy, (hU) of the UV light is greater than the ionization potential (IP) of the sample molecule (R) an electron will be removed, ionizing the molecule. A positively charged molecule and a free electron are produced, as :

$$R + hu \rightarrow R^{+} + e^{-}$$

Several typical reactions follow:

C_6H_6 (benzene) + hu -> $C_6H_6^{+}$ + e^{-}	IP = 9.2 eV
$H_2C{=}CHCl$ (VCM) + hu -> $H_2C{=}CHCl^{+}$ + e^{-}	IP = 9.9 eV
C_3H_8 (propane) + hu -> $C_3H_8^{+}$ + e^{-}	IP = 10.9 eV

For this reason the ionization potential of the subject molecule plays an important role in selecting the lamp energy. Ionization potentials are expressed in electron volts (eV). A list of ionization potentials can be found in Appendix E of this manual or a more complete list in the CRC "Handbook of Chemistry and Physics".

2.1.2 LAMP ENERGIES

There are three lamps available from TEI, 10.0 eV, 10.6 eV, and 11.8 eV. The different energies are obtained by filling the lamp envelopes with different gases and selecting a window which will pass the wavelength produced when the gas is excited. The combination of gas and windows which produce these energies are listed below:

ENERGY	GAS	WINDOW	WAVELENGTH (nm)
10.0 eV	Krypton	MgF	123.6
10.6 eV	Krypton	MgF	117.4
11.8 eV	Argon	LiF	105.1

Though ionization potential will help the user select a lamp, it will not give any information as to the performance of

the detector in measuring a specific compound. The response of the system varies considerably from compound to compound even though they may have the same ionization potential. Some generalizations may help the user obtain a feeling for the difference in response between compounds.

2.1.3 COMPARATIVE RESPONSE

The following is an idealized response chart. No attempt is made to quantitate the relationship, it's a guideline.

Decreasing PID Response:
- Aromatic Compounds
- Unsaturated Compounds
- Saturated Compounds
- Ketones
- Alcohols
- Compounds with Sub Groups

It becomes obvious that sensitivity is influenced by the electronegativity of the molecule though this is not a predictable measure of performance. The only true test of performance is to measure the specific compound of interest and compare it to a good performing standard such as isobutylene.

2.1.4 RESPONSE FACTORS

This relative comparison with isobutylene mentioned above is a very effective way of measuring a variety of compounds without the need to recalibrate for each compound.

The development of a RESPONSE FACTOR allows the operator to correct the instrument's response given a one to one correspondence for all compounds measured, using isobutylene as the reference standard.

Note: Because there is variation in lamp production and hence performance, it is suggested that all calibration and subsequent development of response factors be done on the same lamp/instrument combination.

The preparation of standards and the development of response factors is discussed in subsequent sections of this manual. Once the response factor is generated, it is entered into the 580. The instrument automatically reports the concentration of the compound measured in relative units. It is important to recognize that all compounds measured at that time will be reported relative to the response factor entered in the instrument. For example, if we have calibrated the instrument on isobutylene and have entered a response factor for benzene, we will read concentrations with a one to one correspondence to benzene. If during these measurements toluene or any other compound is encountered, the instrument will report the concentration as if it was measuring benzene. For this reason care should be taken when using this facility.

The above discussion should give the reader a good overview of PID performance. To further understand the intricacies of the

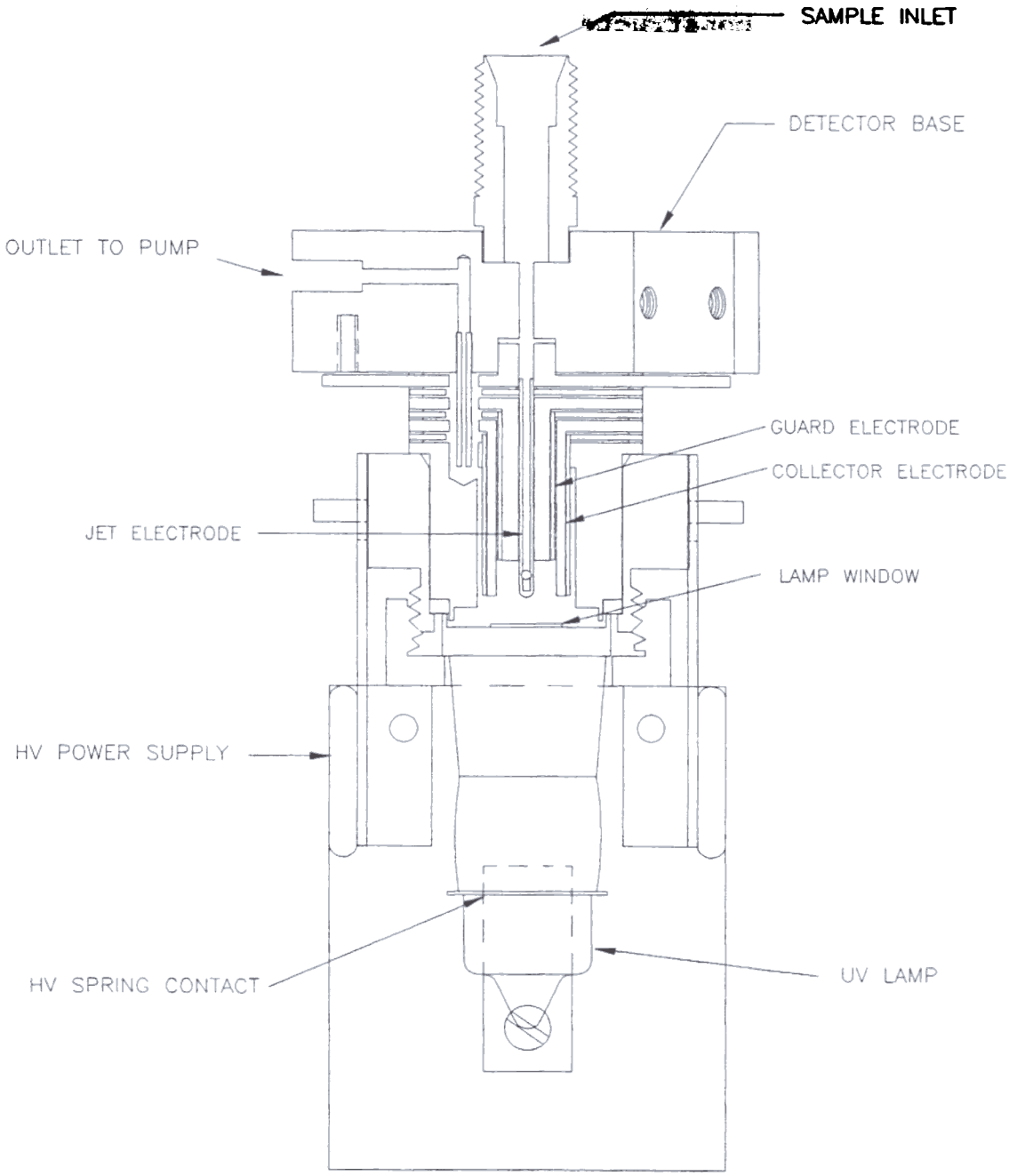

Figure 2.1
Photo Ionization Detector

instrument it is suggested that the user prepare a number of standards of different compounds and measure them relative to isobutylene. Included in this comparison should be several mixtures of compounds such as gasoline, paint thinner, or cleaning solvent, etc. Through this type of study the inequity of the PID response will be better understood making the Model 580 a more effective tool. The use of the instrument is discussed in greater detail in subsequent sections.

2.1.5 PHOTOIONIZATION DETECTOR

The detector is constructed of Teflon and stainless steel to eliminate chemical interaction with the surfaces that are encountered by the sample. To further reduce possible interaction with the surfaces, the flow rate thru the detector is high, 400 - 500 cc/min developing a very dynamic transport of the sample.

Referring to Figure 2.1, the sample is drawn into the ionization chamber through the jet electrode where the UV radiation from the lamp ionizes the sample. A bias voltage of several hundred volts is applied to the jet to aid in the collection of ions. As a result of the ionization process and the impingement of the UV energy from the lamp on the sample, positively charged ions and free electrons are produced. The jet is negative relative to the collector where the electrons are collected.

Between the jet and the collector, separated on both sides by Teflon, is the guard electrode. Its function is to eliminate surface currents which could flow between the two active electrodes. When the Teflon surfaces become dirty during use, there can be the development of a conduction path on the Teflon, which increases in high humidity situations. The guard electrode eliminates this path. The collector electrode is connected to the electrometer which measures the ion current produced during the ionization process. The sample is moved through the detector by an external pump which is on the exit of the detector.

2.2 PROGRAM OPERATION

2.2.1 INTRODUCTION

The 580B has seven switches located just below the display. They are labeled:

ON/OFF MODE/STORE RESET LIGHT +/INC -/CRSR SPKR

The ON/OFF switch toggles the lamp and pump power between on and off. The MODE/STORE, RESET, +/INC, -/CRSR and SPKR switches all have various meanings (including none at all) depending upon the mode. The SPKR switch normally is used to toggle the instrument speaker between on and off. Pressing the MODE/STORE switch will cause the 580B to return to the Run mode, except when the 580B is already in this mode. In which case it will cause the 580B to enter the Log mode.

The LIGHT switch is used to illuminate the display.

The 580B has several modes. Some of the modes may have sub modes. The modes and sub modes are tabulated below.

- Run mode
  - Concentration meter normal
  - Max hold
- Log mode
- Parameter mode
  - Calibration mode
- Access mode
- Clock mode
- Communication mode

The following sections will describe each mode and how to get to them and through them. It is strongly suggested that this section be carefully read and that the 580B be used along with the manual in order to re-enforce the manual.

2.2.2 POWER FOR LAMP AND PUMP

When the 580B is first turned on (see section 1.3) the display will indicate that the lamp is not lit. Pressing the ON/OFF switch will tell the microprocessor to turn on the lamp and the pump. The microprocessor will send power to the lamp and pump and then "look" to see if the lamp is actually lit. If it did not light then the microprocessor will try again.

If after fourteen seconds the lamp still will not light, then the microprocessor will indicate a lamp out condition.

In the event that the microprocessor is unable to light the lamp, check the seating of the lamp (see section 3.1). If the problem persists, call service.

Once the lamp is lit, the display will show the PPM (parts per million) on the bottom line. The top line will either be a bar graph or the maximum reading (see section 2.2.3).

To turn the lamp and pump off simply press the ON/OFF switch.

2.2.3 RUN MODES

The 580B has two run modes, Max Hold and Concentration meter. The run mode is selected in the Parameters section (see Section 2.4). In the concentration meter mode the top line of the display will be a bar graph. The bar graph is a logarithmic bar graph over the range of 0 to 2000 PPM. The bar graph is intended as a rough visual indication of the current PPM. The bottom line will indicate the exact PPM.

In the Max Hold mode the top line of the display will indicate the maximum reading. The bottom line of the display will indicate the current PPM. Whenever a new maximum is seen, the top line will be updated. The Max Hold reading may be reset by pressing the RESET switch while in the run mode.

2.2.4 LOG MODE

The ability to "log" data is one of the 580B's greatest

features. Readings may be stored for later analysis. Each reading will have a date and time as well as a location code associated with it. Up to over 700 readings may be stored. Logged data may even be sent to a printer or computer via an RS-232 serial communication port (see section 2.7).

The Log mode is entered from the Run mode by pressing the MODE/STORE switch. When this switch is pressed from the Run mode the display will show:

LOG THIS VALUE?

on the top line and either PPM or MAX PPM on the bottom line depending upon which run mode the 580B is currently in. By pressing the +/INC switch the display will then show:

LOC. CODE 000001

on the top line (the actual location code may not be 000001). The location code may now be entered. By pressing the +/INC switch the number above the cursor may be incremented. By pressing the -/CRSR switch the cursor may be moved to the next digit. The 580B automatically increments the location code each time a data point is logged.

Once the desired location code has been entered, pressing the MODE/STORE switch will "log" the data point. This means that the reading displayed on the bottom line, along with the location code, the current date and the current time will be stored into the 580B's memory. The 580B will then return to the Run mode.

If for any reason logging is not desired, pressing the RESET switch rather than the MODE/STORE switch will cause the value not to be stored. The 580B will then go back to displaying:

LOG THIS VALUE?

Pressing the mode switch will now return the 580B to the Run mode.

It is possible, when attempting to log a data point, that rather than the display showing "LOC. CODE 000001" it will show "BAR CODE: ." Don't be alarmed. This has happened becouse the location mode selection is not properly set. Section 2.4.3 describes how to set this parameter. Pressing the mode/store switch will cancel the logging operation and return to the run mode. The location mode selection should be changed as described in section 2.4.3.

2.2.4A AUTO LOGGING MODE

The 580B may be instructed to automatically log data according to a predefined time interval. AUTO LOGGING is selected from within the Parameters section (see section 2.4). At the end of the logging interval (settable from 1 second up to 99 minutes and 59 seconds) the current average ppm value will be logged and the logging interval will be restarted.

NOTE: Auto logging is not allowed with the Max Hold mode.

2.2.5 SPEAKER

While the 580B is in the Run mode the speaker may be turned on. The speaker will generate a "clicking" which will increase in speed as the concentration increases. The purpose of the speaker is to give the operator an audible indication of the PPM. The speaker may be turned on or off by pressing the SPKR switch. The speaker rate may also be changed by changing the switches located inside of the instrument. Only one of the four speaker rate switches should be on (in the down position) at any time.

2.2.6 LOW BATTERY

The 580B will display a warning when the battery is low. The warning will be a flashing B in the left hand corner of the bottom line of the display when the 580B is in the Run mode. The 580B should be recharged when the low battery warning is activated.

2.2.7 OVERRANGE

The 580B will display an overrange warning if the concentration goes above 2000 PPM. The top line of the display will show:

OVERRANGE

Once an overrange condition occurs the instrument will "lock out". This means that the overrange warning will continue to be displayed until the instrument is brought to a "clean" area. A clean area is defined to be an area where the concentration of organic vapors is below 20 PPM. The 580B will continue to indicate PPM on the bottom line during an overrange condition.

2.2.8 ALARM

The 580B has an alarm which will sound if the PPM rises above the alarm setting. The alarm setting is entered in the Parameters mode (see section 2.4.3). If the speaker is not activated then the alarm will of course not be heard. Once the PPM drops below the alarm setting the alarm will turn off. The top line of the display will also indicate when there is an alarm condition.

MAIN MENU

By pressing the MODE/STORE switch from the Run mode and then pressing the -/CRSR switch when asked if logging is desired,

580B will display the main menu:

R/COMM	-/PARAM
+/ACCESS	S/CLOCK

The other four operating modes (Communication, Parameters, Access and Clock) may be entered from the Main menu. The operating mode may always be returned to by pressing the MODE/STORE switch.

2.4 PARAMETERS MODE

All of the 580B operating parameters are entered in the Parameters mode. The 580B is also calibrated from within the Parameters mode.

The Parameters mode may be entered by pressing the -/CRSR switch from the main menu.

There are nine different sections in the Parameters mode.

1. Run mode selection
2. Auto logging selection
3. Location mode selection
4. Average time selection
5. Alarm setting
6. Lamp selection
7. Response factor setting
8. Calibration
9. Free space indication

Pressing the +/INC switch will advance the 580B to the next section. Pressing the -/CRSR will advance the 580B to the previous section. Each section and any of its sub-sections will be described in the following pages. It is important to note that when the 580B is in a sub-section of any of the above sections that the +/INC and -/CRSR switches will have a different meaning. This may seem confusing at first but will become clear after stepping through each section.

2.4.1 RUN MODE SELECTION

There are two Run modes. Concentration meter normal and Max Hold (see Section 2.2.3). The top line of the display will show:

CONC. METER

the bottom line will show:

"RESET" TO CHG

the bottom line will alternate every two seconds with:

MAX HOLD

if the 580B is in the Max Hold mode. Pressing the RESET switch will cause the 580B to show:

MAX HOLD
+ = USE/ - = NO

if the +/INC switch is pressed then the Max Hold mode will be selected. If the -/CRSR switch is pressed then the Concentration meter normal mode will be selected. In either case the 580B will then return to the previous screen.

2.4.2 AUTO LOGGING SELECTION

The 580B can be configured to automatically log data points. The top line of the display will show:

AUTO LOGGING

The bottom line will alternate between "RESET TO CHG." and "ON" or "OFF". Pressing the RESET switch will cause the 580B to show:

AUTO LOGGING
+/ON -/OFF

Pressing the -/CRSR switch will turn auto logging off and return operation to the previous screen. Pressing the +/INC switch will enable auto logging and allow setting of the logging interval. The display will show:

INTERVAL 00:01
"RESET"WHEN DONE

The +/INC switch will increment the number above the cursor and the -/CRSR switch will move the cursor. The logging interval format is MM:SS (where M is minute and S is second). Pressing the RESET switch will return operation to the first auto logging screen.

2.4.3 LOCATION MODE SELECTION

The 580B may be configured to accept a six digit location code which is entered via the keypad. There is an alternate method for entering location codes however UL approval has not yet been obtained for this option. For updated information contact Thermo Environmental Instruments inc.

The display shows the currently selected location mode. For example the display will show:

Loc. code mode
"reset" to chg.

When the 580B is configured to enable operator editing of the location code, pressing the RESET switch causes the 580 to show:

Bar code mode
"reset" to chg.

The 580B is now configured for the alternate location mode (which is not presently available for use in hazardous locations). Pressing the reset switch will cause the 580B to be configured for location code mode.

2.4.4 AVERAGE TIME SELECTION

The 580B can be configured to display the average PPM from once a second up to once every four minutes. The display will show:

AVERAGE = 0:01
"RESET" TO CHG

Pressing the RESET switch will cause the 580B to show:

AVERAGE = 0:01
"RESET"WHEN DONE

The +/INC switch will increment the number above the cursor and the -/CRSR switch will move the cursor. The average time format is M:SS (where M is minutes and S is seconds).

NOTE: The maximum averaging interval is four minutes.

2.4.5 ALARM SETTING

The 580B will display the current alarm setting on the top line of the display. The setting may be changed by simultaneously pressing the RESET switch with either the +/INC switch to increment the digit above the cursor or the -/CRSR switch to move the cursor.

2.4.6 LAMP SELECTION

The 580B will display:

LAMP

on the top line. The bottom line will alternate every two seconds between:

"RESET" TO CHG

and the currently selected lamp setting and its associated serial number.
i.e.

11.8eV 000000

By pressing the RESET switch, the 580B will display:

+/10eV -/11eV

on the bottom line. Pressing the +/INC switch will select the 10.0 eV lamp. Pressing the -/CRSR switch will select the 11.8eV lamp. In either case the 580B will then allow editing of the lamp serial number. The display will show:

SERIAL # 000000
"RESET"WHEN DONE

The +/INC switch will increment the number above the cursor and the -/CRSR switch will move the cursor. Pressing the RESET switch will return operation to the original lamp screen.
When using a 10.0 eV lamp or a 10.6 eV setting should be selected. When using an 11.8 eV lamp the 11 eV setting should be selected.

2.4.7 RESPONSE FACTOR SETTING

The current Response Factor setting will be displayed on the top line of the display. The Response Factor may be changed by simultaneously pressing the RESET switch with either the +/INC switch to increment the digit above the cursor or the -/CRSR switch to move the cursor.

The response factor is used to equate the response of one organic vapor with that of the calibration gas. The current reading is always multiplied by the response factor in order to obtain the displayed concentration. A response factor of one will not change the displayed concentration.

2.4.8 CALIBRATION

The 580B will display:

"RESET" TO
CALIBRATE

The calibration mode may be entered by pressing the RESET switch.
The 580B will display:

RESTORE BACKUP
+ = YES

The previous calibration information may be restored by pressing the +/INC switch. The 580B will then return to the previous screen. If the backup is not desired, by pressing the -/INC switch the calibration routine will continue. The display will show:

ZERO GAS
RESET WHEN READY

Once zero gas has been introduced the RESET switch should be pressed. The 580B will then zero the instrument. The 580B will display:

MODEL 580B
ZEROING

Once the 580B has been zeroed the 580B will display:

SPAN PPM = 0000

The Span gas concentration may now be entered by simultaneously pressing the RESET switch and either the +/INC switch to increment the digit above the cursor or the -/CRSR switch to move the cursor. Once the span gas concentration has been entered the +/INC switch should be pressed.

The 580B will then display:

SPAN GAS
RESET WHEN READY

Once the span gas has been introduced the RESET switch should be pressed. The 580B will then calibrate the instrument. The 580B will display:

MODEL 580B
CALIBRATING

Once the 580B has been calibrated the 580B will go back to the beginning and display:

"RESET" TO
CALIBRATE

If during the zeroing or calibrating of the 580B a steady reading was not seen then the 580B will display:

CAL ERROR
RESET WHEN READY

Pressing the RESET switch will return the 580B to zeroing or calibrating (depending of course on which it came from).

See Section 4.1 for tips on calibrating the 580B.

2.4.9 FREE SPACE INDICATION

This section will give a rough indication of how much room is left for logging data points. The screen will display a bar graph on the top line and the amount of free space on the bottom line. The number indicates the total number of bytes which are available. Each data point takes fifteen bytes. Other bytes may also be needed in order to store other important information. This is why only a rough indication of room may be given.

2.5 ACCESS MODE

The Access mode is entered by pressing the +/INC switch from the main menu. The 580B has four access levels, zero through three. Level zero will only allow the operator to log data points and of course to change access levels (only if the access code is known). Level one will also allow the user to change the user identification number. Level two will allow the user complete access to the Parameters mode, and allow viewing of the date and time. Access level three allows complete access.

The access mode has three sections:

1. Access level
2. User identification number
3. Instrument number

Pressing the +/INC switch will advance the 580B to the next section. Pressing the -/CRSR switch will advance the 580B to the previous section.

TABLE OF ACCESS LEVELS

ACCESS LEVEL	OPERATIONS ALLOWED
0	Change access level Log data
1	All above operations View time and date View communication format Display logged data Change user I.D.
2	All above operations Change operating Parameters Reset logged data
3	All operations available

2.5.1 ACCESS LEVEL

The screen will display:

ACCESS LEVEL 3
"RESET" TO CHG

By pressing the RESET switch the 580B will display:

KEY 00003
"RESET" WHEN DONE

Please note that in both screens the 3 indicates the current access level and may not necessarily be a three.

In order to change the access level the +/INC switch may be pressed to increment the digit above the cursor and the -/CRSR switch may be pressed to move the cursor. The desired access level should be entered in the right most digit. Note that only access levels between zero and three are legal. The remaining four digits are the access code. The access code will be 0000 when the instrument is shipped. The access code should then be entered. Once this is done press the RESET switch. The 580B will then return to the previous screen.

If the access code entered was not the proper access code, or if the access level was not a legal access level then the access level will not be changed.

The last and most important point regarding the access level is how to change the access code. The access code is the four rightmost digits of the instrument number. The instrument number is only viewable (and therefore only changeable) while in access level three.

2.5.2 USER IDENTIFICATION NUMBER

The screen will display:

I.D.# 014563977
"RESET" TO CHG

By pressing the RESET switch the 580B will display:

I.D.# 014563977
"RESET" WHEN DONE

The user identification number may be changed by pressing the +/INC switch to increment the digit above the cursor and the -/CRSR switch to move the cursor. The user identification number is a nine digit number (just right for fitting a social security number). Once the user identification number has been entered press the RESET switch and the 580B will return to the previous screen.

2.5.3 INSTRUMENT NUMBER

The screen will display:

INSTR # 000000
"RESET" TO CHG

By pressing the RESET switch the 580B will display:

INSTR # 000000
"RESET" WHEN DONE

The instrument number may be changed by pressing the +/INC switch to increment the digit above the cursor and the -/CRSR switch to move the cursor. Once the instrument number has been entered the RESET switch should be pressed. The 580B will then display the previous screen.

When the instrument number is changed it is very important that the last four digits be remembered. These digits are the access code and therefore will need to be known in order to change the access level.

2.6 CLOCK MODE

The Clock mode is entered from the Main menu by pressing the SPKR switch. The screen will display the date and time on the top line. The bottom line will display:

"RESET" TO CHG

By pressing the RESET switch the 580B will display:

"RESET" WHEN DONE

The date and time may be changed by pressing the +/INC switch to increment the number (or in the case of the month the months abbreviation) above the cursor. The -/CRSR switch will move the cursor. Once the proper month has been entered the RESET switch should be pressed. The 580B will return to the previous screen.

The date and time will be maintained even when the instrument is turned off! It is however advisable that the date and time periodically be checked to ensure that it is correct.

2.7 COMMUNICATION MODE

The Communication mode is entered from the main menu by pressing the RESET switch. The Communications mode has four sections.

1. Communicate with printer or computer
2. Display logged data
3. Reset logged data
4. Set communication parameters

Pressing the -/CRSR switch will advance the 580B to the next section.

NOTE: A detailed discussion of communication protocol is given in Appendix A. Further discussion of communication may be found in Section Seven.

2.7.1 COMMUNICATE WITH PRINTER OR COMPUTER

The 580B is capable of communicating with a computer or outputting logged data to a printer. The 580B will display:

COMMUNICATE?

"+" = YES

if the computer format is selected or it will display:

OUTPUT TO PRINTER
"+" = YES

if the printer format is selected. In either case pressing the +/INC switch will cause the 580B to try to establish communication. Pressing the -/CRSR switch instead will cause the 580B to advance to the next section.

2.7.2 DISPLAY LOGGED DATA

If at least one data point has been logged the 580B will display:

DISP. LOG DATA?
"+" = YES

By pressing the +/INC switch the 580B will display the first data point. The date and time which the data point was logged will be displayed on the top line. The bottom line will alternate between the location code and the PPM. Pressing the +/INC switch will advance to the next logged data point. This will continue until there are no more data points at which time the 580B will display:

NO DATA STORED

The MODE/STORE switch may be pressed to return to the Run mode.

2.7.3 RESET LOGGED DATA

The logged data can be erased so that more data points may be logged. The screen will display:

RESET LOG DATA?
"+" = YES

Pressing the +/INC switch will erase all of the logged data points. The 580B will then advance to the next section.

2.7.4 COMMUNICATIONS PARAMETERS

The 580B can be configured to communicate with a printer or a computer. The baud rate may also be set for 9600, 4800, 2400, 1200, 900, 600, 300, or 150 baud. The 580B will display the current communication format (computer or printer) on the top line and the current baud rate on the bottom line. Pressing the RESET switch will cause the 580B to display:

COMPUTER FORMAT
+ = USE - = NO

Pressing the +/INC switch will select the computer format and the 580B will advance to the baud rate screen (see below). Pressing the -/CRSR switch will cause the 580B to display:

PRINTER FORMAT
+ = USE - = NO

Pressing the +/INC switch will select the printer format and the 580B will advance to the baud rate screen (see below). Pressing the -/CRSR switch will cause the 580B to display the previous screen.

The baud rate screen will display the currently selected baud rate on the top line. The bottom line will display:

+ = USE - = NO

Pressing the +/INC switch will cause the displayed baud rate to be selected and the 580B to show the selected format on the top line and the baud rate on the bottom line. Pressing the -/CRSR switch instead will cause the next lowest baud rate to be displayed.

2.8 BATTERY / CHARGER

The model 580B uses a 1.2 amp hour lead acid (gel cell) battery. There is protection circuitry potted directly on top of the battery. The battery is rechargeable with the charger provided with the instrument. The charger is regulated so that there is no danger of "over charging" the battery. It is suggested that the 580B be charged over the weekend (as well as each evening) during periods of heavy usage in order to ensure maximum battery charge.

SECTION III

ROUTINE MAINTENANCE

The routine maintenance of the 580B involves the calibration of the instrument, the cleaning of the lamp window, and the maintaining of charge on the battery. The following pages give instructions for routine maintenance. Figure 3.1 illustrates the detector assembly.

3.1 LAMP INSERTION AND REMOVAL

3.1.1 REMOVAL

NOTE: The 580B must be off while removing the lamp.

In order to remove the lamp the four screws which hold the case top and bottom together must first be loosened. The case bottom should be placed flat on the table and the top placed on its side next to the bottom.

The high voltage power supply is removed next by loosening the thumb screws on each side and then pulling the power supply towards the rear of the instrument (see figure 3.1). The lamp may now be removed by loosening the lamp nut.

3.1.2 INSERTION

Insertion of the lamp is accomplished by performing the above tasks in the reverse order. The lamp should be placed flat against the o-ring and the lamp nut fastened down in order to create a proper seal. The high voltage power supply should then be inserted and the thumb screws fastened down. There are three pins protruding from the high voltage power supply which should fit snugly into connectors located beneath the detector. The lamp spring (mounted in the center of the high voltage power supply) should make contact with the lamp ring.

3.1.3 LAMP CLEANING

On occasion the lamp should be removed for cleaning. Cleaning of the lamp is accomplished by cleaning the lamp surface of the UV lamp. The procedures for cleaning the different lamps are as follows:

3.1.3.1 LAMP CLEANING METHOD FOR 10.6 eV OR LESS

This is accomplished by using the Aluminum Oxide scouring powder provided with the 580. First place a small amount of Aluminum Oxide scouring powder on the lens of the UV lamp. Next gently scour the lens surface with a soft tissue or cloth. Scour the lens in a rotary type motion.

After scouring the lens surface, gently blow the remaining powder from the lens. Follow this with an alcohol or acetone rinse, and then wipe dry with a soft tissue. The lamp is now able to be inserted into the detector.

3.1.3.2 LAMP CLEANING METHOD FOR 11.7 eV OR MORE

This is accomplished by gently polishing the surface of the window with anhydrous alcohol on a cotton swab, followed by an anhydrous methanol or ethanol rinse, and then wiping dry with a soft tissue. Do not allow the alcohol to remain on the surface as it will leave a film. Stubborn films may require multiple cleanings for complete removal. The lamp is now able to be inserted into the detector.

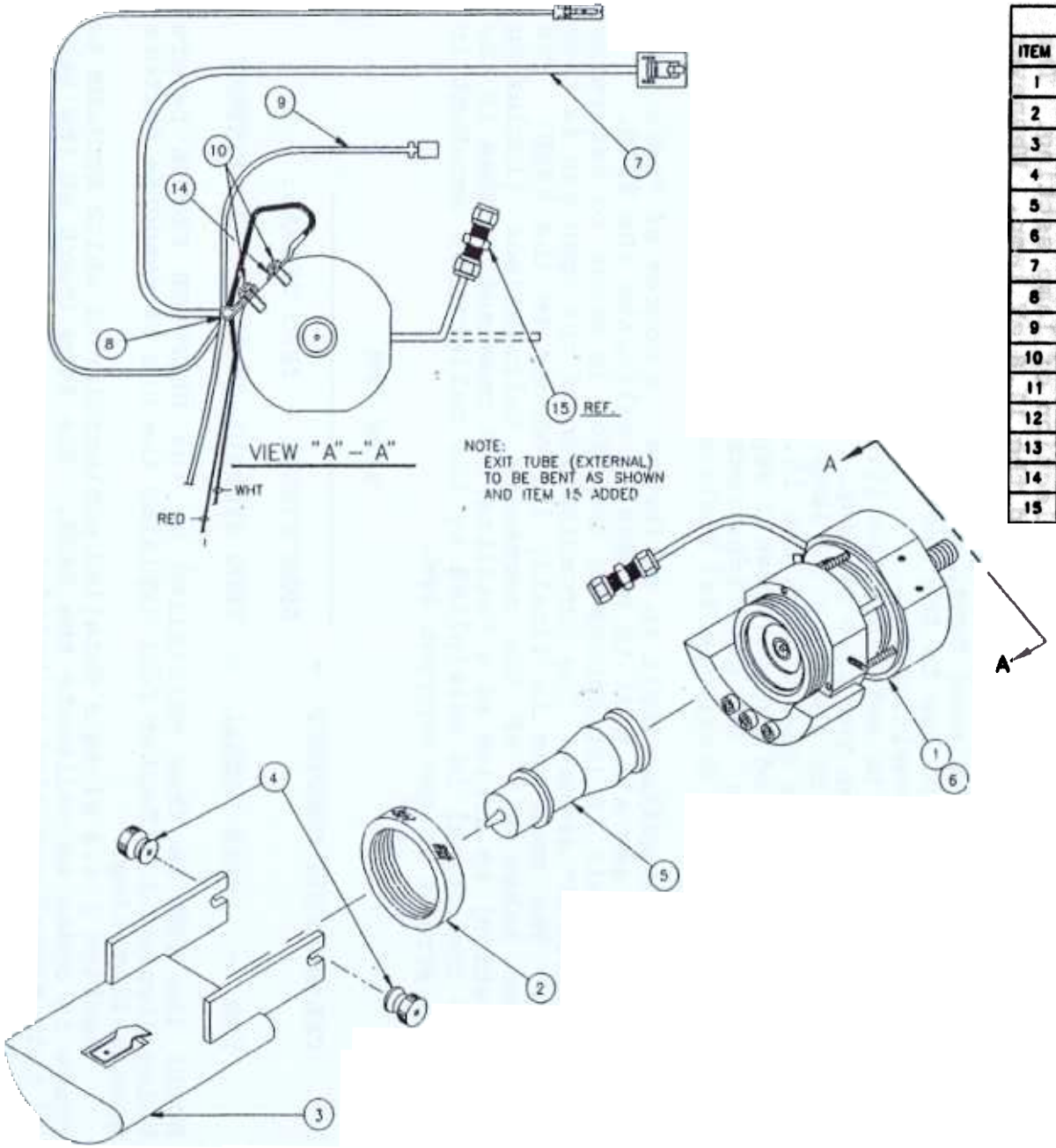

MATERIAL LIST			
ITEM	PART NO.	DESCRIPTION	QTY
1	580B-6003	DETECTOR SUB ASSY.	1
2	580S-2010	NUT - LAMP (13567)	1
3	580S-6019	PWR. SUPPLY ASSY. (13560)	1
4	12082	NUT -, KNURLED	2
5	11929	U.V. LAMP 10.0	1
6	580S-6035	DETECTOR WIRING ASSY. (13575)	1
7	580B-6001	BASE HARNESS ASSY.	1
8	4166	STRAIN RELIEF	1
9	580S-6028	SIGNAL CABLE (13568)	1
10	5814	#4-40 X 1/4" BINDER HD. SCREW	2
11			
12			
13	5510	TEFLON TUBING 1/8" 6.5" LG	1
14	5588	#4 INT. TOOTH STAR WASHER	1
15	4417	UNION-2U-316	1

580B-6004

Figure 3.1
Detector Assembly

3.2 CALIBRATION

NOTE: Chapter four should be read before calibrating the 580B in order to gain a better understanding of the concepts behind calibration of the 580B.

The following is a brief discussion of calibration as it relates to different lamps. One of the parameters in the Parameters mode (see Section 2.4) allows selection of lamp setting. The two types of lamps are the 10.0 eV and the 11.8 eV lamp. Whenever a new lamp is used the 580B must be calibrated. This is true even if the new lamp is the same type, e.g., the new and old lamp are both 10.0 eV. This is due to the fact that each lamp will have a slightly different sensitivity.

It is important to note that the 11.8 eV lamp will in general be less sensitive than the 10.0 eV lamp. This is true despite the higher energy level of the 11.8 eV lamp. The 11.8 eV lamp will however "see" certain gases which the 10.0 eV lamp will not. See Table E.1 for a list of common organic vapors and their associated ionization potentials. Any questions regarding the use of the 580B should be directed to Environmental Instruments Company Application Laboratory.

The 580B is quite simple to calibrate. A source of "zero air" and "span gas" are all that is needed to calibrate the 580B.

The zero air is introduced to the 580B in order to determine the "background" signal. The concentration of the span gas is then selected. The span gas is finally introduced to the 580B. The instrument makes all of the necessary calculations (including linearization) to arrive at a "calibration constant." When in the Run mode the signal is multiplied by the calibration constant in order to arrive at the current PPM.

$$\text{CALIBRATION CONSTANT} = \frac{\text{SPAN PPM}}{\text{SPAN SIGNAL} - \text{ZERO SIGNAL}}$$

$$\text{PPM} = (\text{SPAN SIGNAL} \quad \text{ZERO SIGNAL})\ \text{CALIBRATION CONSTANT}$$

NOTE: The PPM is then multiplied by the RESPONSE FACTOR before being displayed. Chapter four explains the use of response factors when calibrating.

Section 2.4.8 gives a detailed explanation of which buttons to press in order to calibrate the 580B. The flow chart at the back of this manual may also be helpful.

CHARGE

When there is a flashing "B" in the lower left corner of the display (while in the run mode) the battery is low. The battery is recharged by plugging the charger into the RUN/CHARGE plug at the rear of the 580B. The instrument runs while it is charging.

SECTION IV

CALIBRATION

GENERAL

The Model 580B Organic Vapor Meter is indeed a quantitative instrument and can certainly be used as such. It makes use of the Photoionization Detection System using a lamp with an ionization energy of 10.0 eV which is standard in the Model 580B. Almost all organic materials will be ionized at this energy level. There are some organic materials, such as a few of the freons, methane, ethane and propane that are not ionized and thus will not be detected. The ionization potentials for the various organic materials will simply tell whether the material will be detected by the Photoionization Detector. It does not give any clue as to the sensitivity of the detector for that particular material. Certainly, different organic vapors will have different sensitivities. It is important to understand that the Model 580B does indeed sense most organic vapors and that its response to these different organic vapors will be different.

In this section of the manual, the aspects of calibrating the Model 580B for various vapors will be discussed. In the following section discussing applications, various ways of using the features of the Model 580B will be explained along with the various methods for calibration of the 580B. There will also be applications of the Model 580B in specific instances where the organic vapors or the mixtures of organic vapors are completely unknown. The 580B can be an extremely useful tool, even in areas such as those.

FACTORY CALIBRATION TEST OF THE MODEL 580B

The Model 580B has been tested for calibration and linearity tested at the factory. The particular gas chosen for this calibration is isobutylene. The Model 580B has good response for isobutylene. Isobutylene standards prepared in air are relatively stable with time, undergoing no serious adsorption or reaction problems. The test information is included in the instrument packet. In addition to the above test a benzene standard is also run. It is important to note that the instrument was not calibrated. It was tested for calibration. Therefore, it should be calibrated by the operator before use.

4.3 METHODS OF GENERATING CONCENTRATIONS OF VARIOUS MATERIALS IN AIR

This section is not intended to be all inclusive as far as the preparation of gas and vapor standards in air are concerned. Only those methods that have been found most practical for the calibration of the 580B are discussed here. There are basically two types of standards, cylinder and bag.

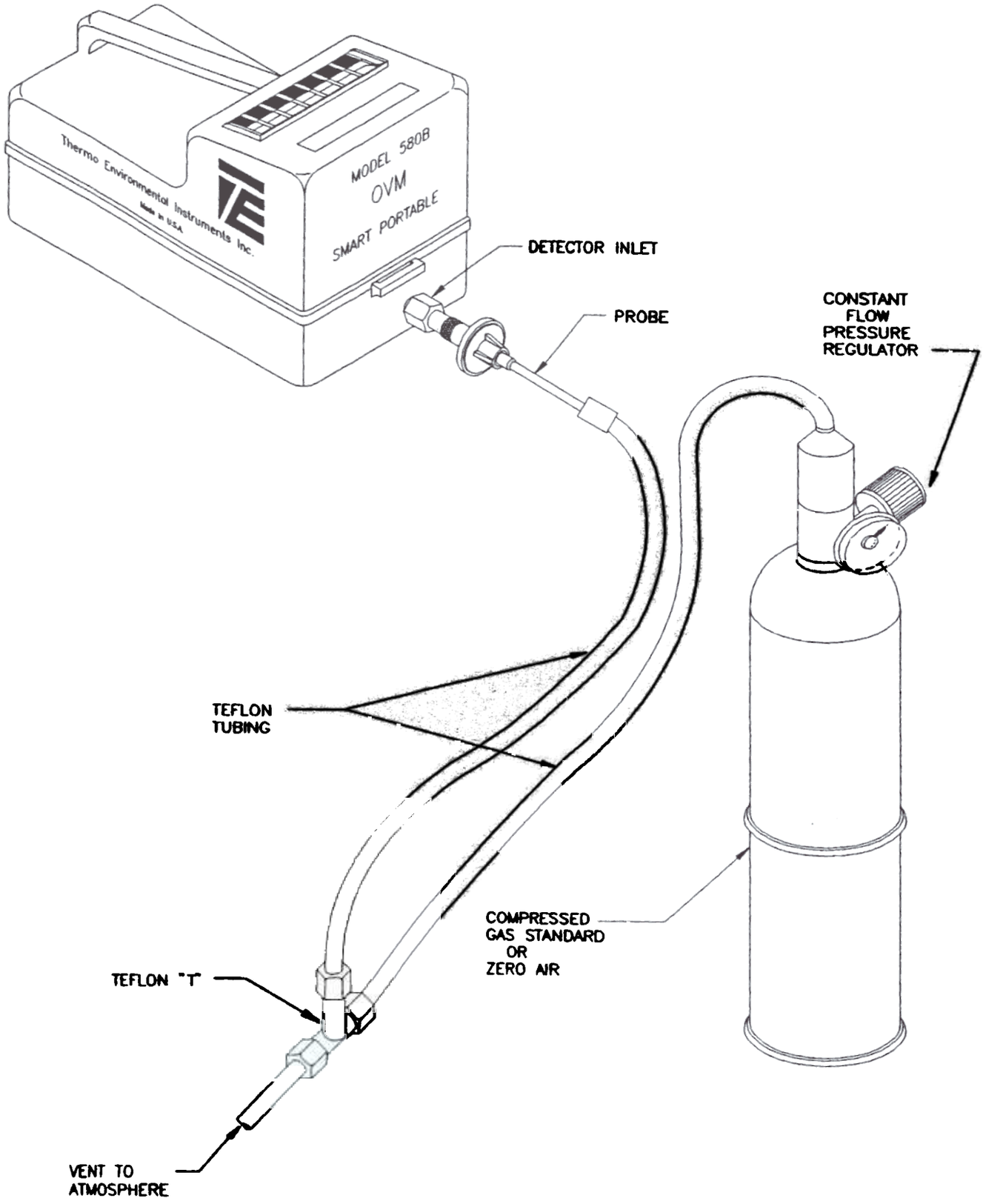

Figure 4.1
Cylinder Calibration

4.3.1 CYLINDER STANDARDS

Certainly commercially available standard cylinders of gaseous materials in air offer the most convenient method of calibration. However, these are static standards. Standards prepared in this fashion in air for vapors of various organic liquids often show concentration reduction with time due to adsorption problems. In general, gases when mixed with air will maintain their concentrations with time since adsorption is generally not a problem.

However, some gases are sufficiently reactive that chemical reaction of the gas will cause a reduction of it in air. These precautions must be observed when using commercially prepared standards for calibration of the Model 580B. It is for this reason that isobutylene in air was chosen as a reference standard for factory calibration. TEI offers a cylinder standard which includes both zero and isobutylene standards. A constant flow pressure regulator sets the flow needed for calibration of the 580B. Figure 4.1 illustrates the physical calibration procedure. The inlet to the 580B is connected to the "T" as shown. It is important that this connection is tangent to the gas flow. The "T" is connected to the regulator on the standard cylinder. It is important that a length of tubing is attached to the "T" location. This prevents diffusion of ambient air into sample line. The regulator and tubing assembly will have to be moved between both the zero air and standard cylinder.

4.3.2 BAG STANDARDS (ISOBUTYLENE)

Bag standards can be prepared in a laboratory and in general are reasonable ways of calibrating the Model 580B. However, it is important that these standards be used shortly after their preparation to reduce the significance of any adsorption problems. Static standards prepared for calibration of the Model 580B are best prepared in collapsible plastic bags. This is opposed to a fixed volume container. The sampling rate of the 580B, which is 500 ml/min, requires an appreciable amount of sample. Even one minute's sampling out of a fixed container will remove 500 ml/min from it. This should not significantly reduce the pressure inside the container. Thus, the collapsible bag provides the best means as opposed to a fixed volume. A 5 gallon polyethylene bag is a convenient size to use for the preparation of static standard.

A tube is inserted into the opened end of the bag and the bag opening then sealed around the tube. The tube should have a cutoff valve or some means of closing the volume of the bag. The volume of air introduced into the bag must be measured. This is most conveniently measured by a wet test meter. However, a source of air flowing through a flow meter can be used if the flow can be held constant, then time is a measure of the volume of the air placed into the bag. All air is expelled from the bag by completely collapsing it prior to connection to the source of air.

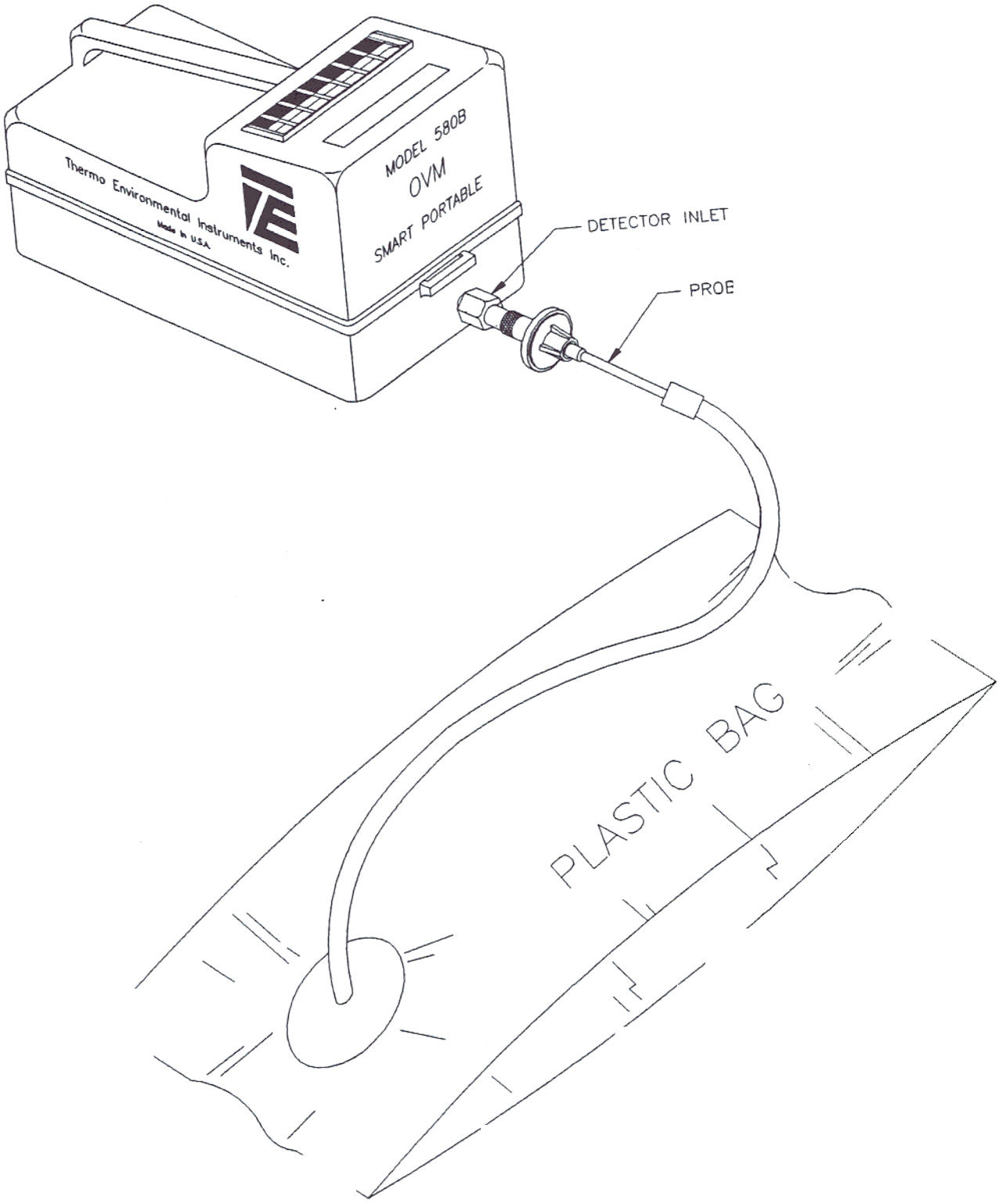
MODEL 580B
OVM
SMART PORTABLE
Thermo Environmental Instruments Inc.
Made in U.S.A.
DETECTOR INLET
PROE
PLASTIC BAG

Fi;
ag

It can then be connected to a wet test meter or flow meter via a short length of rubber tubing hooked to the plastic tube of the bag. The air flow is started into the bag at a rate of approximately 5L/min. A total of 10 liters is a convenient volume for a 5 gallon bag. This would mean approximately 2 minutes for filling the bag. Figure 4.2 illustrates the physical configuration needed to develop bag standards.

For gaseous samples, the trace organic will be added via a glass hypodermic syringe. The 1 cc Tuberculin syringe is a convenient size. For an isobutylene standard, the 1 cc syringe is flushed with pure isobutylene and then filled to the 1cc mark. While the air is flowing into the plastic bag, the short piece of rubber tubing is pierced by the needle from the 1 cc syringe and the plunger slowly depressed such that the 1 cc of isobutylene is added to the air flowing into the plastic bag. When 10 liters of air have been added to the plastic bag, the flow is immediately stopped and the valve on the tube or the closing clamp is applied to contain the air and isobutylene within the plastic bag. It is best at this stage of the procedure not to rely solely on the diffusion of isobutylene to form a uniform mixture inside the plastic bag. Slight kneading of the plastic bag will hasten the mixing of the isobutylene in air. The plastic tube from the bag is then connected to the probe on the Model 580B via a short length of rubber tubing and the valve on the plastic tube immediately opened. The Model 580B withdraws a sample from the bag at the sampling rate of 500 ml/min. Thus, 10 liters of sample in the bag will provide approximately 20 minutes. Certainly the calibration of the 580B can be accomplished in a shorter period of time. The concentration of isobutylene in ppm by volume will be equal to the sample size, which was 1 cc, divided by the volume of the bag in liters, which would be 10 liters, times 1000. In this particular instance, the concentration would be:

$$\text{Conc (ppm by Vol)} = \frac{\text{1cc Isobutylene} \times 1000}{\text{10 L Air}} = 100 \text{ ppm}$$

4.3.3 BAG STANDARDS (ORGANICS)

On occasion there is the need to prepare standards other than the normal calibration standard. As mentioned previously, isobutylene was chosen as a standard because of its stability. If other standards are to be used, it is best to develop a relation of the other standard to a standard of known stability like isobutylene. If this procedure is followed, a response factor can be developed by comparing the other organic standard to isobutylene this technique will be discussed in a later section. The following is a suggested technique for preparing other standards.

For organic materials, which are normally liquids at room temperature, the procedure is essentially the same except that an extremely small liquid sample is injected into the flowing air stream rather than the gas sample. This technique works well

only for relatively volatile organic materials. The flowing air stream must vaporize all of the material or the calculation will be off. If the material is not rapidly volatile in that flowing air stream, the liquid should be injected through the surface of the plastic bag. Immediately after withdrawing the needle, the hole in the plastic bag should be covered with a piece of plastic tape.

Again, significant kneading of the bag will hasten the evaporation of the sample and mixing of the vapor into the air to provide homogeneous samples. The introduction of this sample into the 580B is the same as before. The calculation of the concentration of the vapor in air is a two-step procedure whereby the small volume of liquid injected into the air stream and into the plastic bag is converted to a volume of vapor. This volume of vapor is then used in the same manner as the volume of gas in the case of isobutylene. The following equations apply:

$$\text{Volume Vapor (uL)} = \frac{\text{Liquid Volume (ul)} \times \text{Liquid Density} \times 24.45}{\text{Molecular Weight}}$$

The above equation gives the vapor volume at atmospheric pressure (760 torr) and 25° C (77F).

Then:

$$\text{Concentration (ppm by Volume)} = \frac{\text{Vapor Volume (ul} \times 1000}{\text{Air Volume (liters)}}$$

The following is a sample calculation for benzene:

Liquid Volume = 2 ul

Benzene Density = 0.879 g/cc

Molecular Weight Benzene = 78.1

Air Volume = 10 Liters

$$\text{Vapor Volume} = \frac{2 \times 0.879 \times 24.45 = 0.55 \text{ ul}}{78.1} \quad \text{Benzene Vapor}$$

$$\text{Conc} = \frac{0.55 \times 1000}{10} = 55 \text{ ppm (vol}$$

The syringe used for the measurement of liquids in this particular instance is a small volume-type such as those manufactured by the Hamilton Company. A convenient size syringe is the 10 microliter volume.

4.4 580B CALIBRATION

The following procedure is applicable for both Cylinder and Bag Standards. The sequence requires both Zero gas and Span gas to be used. Span gas can be either contained as a cylinder or bag, in either case the exact concentration used must be known. This concentration will be entered to the 580 when the program provides its entry. With respect to Zero gas, there are several choices. Obviously a certified zero air standard in a cylinder presents no problem. Another choice would be to build a zero air standard in a bag. This can be simply accomplished with the set-up in Figures 4.1 and 4.2 using a charcoal scrubber to remove all the hydrocarbons present in the air. Charcoal does not absorb Methane; this does not cause a problem because the PID does not respond to it. Another approach which could be used in an emergency is to use room air unscrubbed.

This is acceptable if you know that there are no hydrocarbons present or they are exceptionally low in concentration. However, it is not recommended as a standard practice. The physical set up for cylinder calibration is illustrated in Figure 4.1; bag calibration in Figure 4.2.

4.4.1 CALIBRATION ROUTINE

(A) Set-up calibration assembly with zero air cylinder or bag as described in Figures 4.1 and 4.2.
(B) Model 580B set-up and zero calibration.

1. Power-up instrument using power plug.
2. Depress ON/OFF Key to ignite lamp and initiate sample pump.
3. Depress MODE/STORE Key.
4. Depress-/CRSR Key in response to LOG THIS VALUE? Prompt.
5. Depress-/CRSR Key to select Parameters Mode from the Main Menu.
6. Depress +/INC Key to advance thru the Run Mode selection parameter prompt.
7. Depress +/INC Key to advance thru the Auto Logging Mode selection parameter prompt.
8. Depress +/INC Key to advance thru the Average Time selection parameter prompt.
9. Depress +/INC Key to advance thru the Alarm Setting parameter prompt.
10. Depress +/INC Key to advance thru Lamp Selection parameter prompt.
11. Depress +/INC Key to advance thru Response Factor Setting parameter prompt.
12. Depress RESET Key to initiate calibration sequence.
13. Depress-/CRSR Key to decline restoration of the backup calibration.
14. Connect outlet of calibration tubing assembly to the Model 580B Detector Inlet as illustrated in Figure 4.2.
15. Introduce Zero Air to Model 580B by opening flow regulator.

16. Depress RESET Key to "Zero" Model 580B.
17. Close Flow Regulator.

C) Span Calibration - assuming that the Span gas has a concentration of 250 ppm isobutylene the following procedure is followed:

18. Simultaneously Depress RESET and -/CRSR Keys to activate the movable cursor.
19. Repeat Step 18 until the cursor is at the ones place.
20. Simultaneously Depress RESET and +/INC Keys to increment the ones place value.
21. Repeat Step 20 until the ones place value reads 0.
22. Repeat Step 18 to move cursor to the tens place.
23. Repeat Step 20 until the tens place value reads 5.
24. Repeat Step 18 to move the cursor to the hundreds place.
25. Repeat Step 20 until the hundreds place value reads 2.
26. Repeat Step 18 to move the cursor to the thousands place.
27. Repeat Step 20 until the thousands place value reads 0.
28. The LCD should now read:

SPAN PPM = 0250
"+" TO CONTINUE

29. Depress +/INC to accept the span conc. value.
30. Connect isobutylene cylinder (250 ppm) to calibration tubing assembly.
31. Connect outlet of calibration tubing assembly to the Model 580B Detector Inlet.
32. Introduce isobutylene standard to Model 580B by opening flow regulator.
33. Reset key to "CALIBRATE" Model 580B.
34. Close Flow Regulator.
35. Depress +/INC. Key in response to "RESET" TO CALIBRATE message.
36. Depress MODE/STORE to return to the Run Mode.

The instrument has been calibrated and is ready to make measurements.

4.5 DETERMINATION OF RESPONSE FACTORS

As mentioned above, the Model 580 can be calibrated with isobutylene but be set to read correctly, the concentration of another substance. This is done by using the Response Factor that is set in the parameter routine. The default for the response factor is 1.0. The Response Factor is the number that is multiplied by the measured concentration to obtain the correct concentration of the measured component. If the chemical to be measured is less sensitive on a PID than the standard, (usually isobutylene) then the Response Factor is greater than 1.0. If it is more sensitive than the standard then the Response Factor is less than 1.0.

The reason for a Response Factor is practicality. If it is

know that the sample to be measured contains only benzene and therefore the user would like to read benzene concentration directly, there are two approaches. The user could make a bag standard daily of benzene vapor in air and calibrate the 580 directly. Or the Response Factor could be used. In the latter case a bag with benzene is made only once for comparison to a cylinder of a stable standard (such as isobutylene). Then daily, the Model 580 is calibrated with the cylinder standard, a simple operation compared to the work of preparing a bag standard.

As an example, if the bag containing 55 ppm benzene in air as prepared above were measured in a 580 calibrated against isobutylene, the concentration might have been read as 91 ppm. thus the 580 is more sensitive for benzene than for isobutylene.

The Response Factor can now be calculated as:

$$\text{Response Factor (RF)} = \frac{\text{Factor STD Concentration}}{\text{580 Reading of Factor STD}}$$

$$RF = 55/91 = 0.604$$

When 0.60 is entered into the 580 as the Response Factor, the 580 will read 55 ppm for the bag.

Now the 580 need only be calibrated using an isobutylene standard and a Response Factor of 0.60 to correctly respond to benzene.

SECTION V

APPLICATIONS

5.1 GENERAL

This section discusses six applications which were done on the old model 580. These applications are discussed as they relate to the model 580B. The following applications of the Model 580B are given to show some different uses and means of calibration of the Model 580B in various practical applications. It is certainly not intended to be an exhaustive list of the uses of the Model 580B. In each situation, the stress is placed on the means of calibration and the interpretation of the readout of the Model 580B. Since the Photoionization Detector responds to virtually all organic materials and since its response varies for the different organic materials, questions can certainly arise as to just how the numbers presented on the digital display relate to anything meaningful. These applications will hopefully illustrate several ways in which these numbers can be quantitative and also illustrate uses of the 580B where accurate quantitation may be impossible.

5.2 VINYL CHLORIDE MONOMER IN REACTION VESSELS.

This particular application involved measuring the vinyl chloride content in vinyl chloride polymerization vessels following the polymerization reaction and the removal of the polymer slurry. Any residual vinyl chloride left in the reaction vessel has to be flushed and scrubbed prior to the opening of the vessel. The vinyl chloride content must be below a certain prescribed level prior to this opening. The reaction vessel is flushed with nitrogen to remove the vinyl chloride from the vessel and purge it through the filter media which remove the vinyl chloride from the nitrogen stream for recovery. During this particular operation, it is known that vinyl chloride monomer comprises significantly more than 90% of the entire organic material. In this instance, if the Model 580B is calibrated for vinyl chloride measurement, indeed the readout will be virtually the true vinyl chloride concentration inside the reactor vessel. The nitrogen exit stream prior to the vinyl chloride recovery was the point used for the analysis.

Since the plant was a considerable distance from the laboratory and since the study would require a significant period of time encompassing several weeks, it was decided to calibrate the Model 580B with the isobutylene reference standard and determine a response factor setting for a vinyl chloride standard in the laboratory.

With the response factor set at 1.0, the instrument was calibrated with isobutylene. The Model 580B was then presented with a known concentration of vinyl chloride monomer in nitrogen. The response factor for the vinyl chloride was then set in order for the Model 580B to read the correct concentration of vinyl chloride in the nitrogen. Static

standards of vinyl chloride are very definitely not stable with time due to the reaction of the vinyl chloride with itself. Thus, standards need to be prepared fresh each time vinyl chloride is to be used to calibrate an instrument. Since bag preparation, which was the technique used for this laboratory calibration of the 580B, would have been inprac tical at the plant; the use of a stable reference standard of isobutylene was chosen. Thus, at the plant site, the Model 580B could be calibrated using the isobutylene standard from a cylinder. This of course, greatly simplified the plant use of the Model 580B. This relationship to a reference standard reduces the time and equipment required at the plant such that the survey of all of the reactor vessels was completed in a short period of time with the items established for the nitrogen flush of the reactor vessels prior to opening the reactor vessels.

It is important to note that when the response factor setting was determined in the laboratory, nitrogen was used as the matrix for the bag preparation of the vinyl chloride standard. If air were used a different setting (higher) would be obtained. Since the sample was in a nitrogen matrix so should be the standard. Note also it is not necessary to have the isobutylene standard in nitrogen. In addition to correcting for differences in response between isobutylene and vinyl chloride, the response factor setting can also adjust for the different readings in nitrogen and air.

5.3 MONITORING ISOLATED PLANT AREAS FOR TOLUENE AND METHYL ISOBUTYL KETONE.

Two areas of an extensive plant operation were required to be monitored for the levels of methyl isobutyl ketone and toluene. Both of these areas were relatively isolated. In one area, methyl isobutyl ketone was the only solvent to which the atmosphere was exposed other than the potential leaks that might occur in process equipment in that same area. There were no other known solvents in use in that area and the ventilating system in effect isolated this area from other areas in the plant. In the second area, toluene had just very recently been substituted as a solvent in place of benzene due to the lower TLV for benzene. Average workplace levels were therefore needed for the toluene concentration in this work area. Again, toluene was the only solvent in this area and there was no other process equipment in the immediate area for even possible leak problems.

Notice that in both of these areas in the plant, it is certainly known from the processes occurring in that area and its relative isolation from the other areas in the plant, exactly which organic vapors will be by far the predominant vapors in the workplace air. In many instances, by simply knowing the processes involved and the chemicals in use in those processes, the qualitative aspects of the environment can indeed be established without the use of instrumentation. This is one of the most overlooked aspects in establishing what organic vapors are present in the environment. It simply involves determining what are the possible organic vapors that can be present. In general, this narrows it to several and in many cases, a single organic

vapor.

In these cases, the Model 580B can be calibrated specifically for these materials and will provide quantitative data on the levels of these materials in the workplace environment. In this particular instance, even though the laboratory to be used for the calibration of the Model 580B was at the plant site, it was desired to use a single 580B to monitor both work areas sequentially and several times throughout the course of a single day. This was to be done over a period of time to establish the variations of both methyl isobutyl ketone and the toluene in these work areas. In this particular instance, changing the response factor setting can avoid considerable calibration changes, as one moves from determining concentrations of methyl isobutyl ketone to the area where one is measuring the concentrations of the toluene vapor.

For calibration, the Model 580B response factor was set at 1.0 and the instrument spanned properly using a known reference standard of isobutylene. The Model 580B was then presented with a flowing air stream containing toluene vapor as generated in the Thermo Electron Model 360 using a toluene diffusion tube. The response factor was then adjusted so that the readout of the Model 580B corresponded to the toluene concentration in this standard.

The Model 580B was then presented with a flowing air stream containing methyl isobutyl ketone. This also was generated via a diffusion tube in the Model 360 Standards Generator. Once again, the response factor was adjusted so that the digital display gave the correct reading for the concentration for the methyl isobutyl ketone presented to the instrument.

With the instrument then calibrated with the reference isobutylene standard and knowing the proper settings of the response factors for methyl isobutyl ketone and toluene, the Model 580B was then ready for its plant survey. The area containing the toluene was monitored for a period of time with the toluene levels as noted by the 580B being recorded.

The response factor was set for this toluene reading. The instrument was then moved directly to the methyl isobutyl ketone area and the response factor adjusted to read methyl isobutyl ketone. The 580B was then able to read directly the methyl isobutyl ketone concentration in the second area. There was the possibility of leaks in process equipment in this particular area. The area in general was surveyed. If significant changes in the reading of the 580B were observed, the 580B was used as a leak sourcing instrument as described in a later section. In this fashion, it could be determined if some of the varying concentrations in this area were indeed coming from a leak in the process equipment. During the survey of this particular area, no leaks from process equipment were observed, therefore, the readings obtained on the 580B could indeed be considered the methyl isobutyl ketone concentration in this particular area.

Throughout the survey of these two workplaces, the 580B could move back and forth rapidly due to its portability and could be, in effect, recalibrated for each of the two different vapors by the mere setting of the response factor.

5.4 PETROLEUM ETHER VAPORS IN WORKSPACE AIR.

A given workplace was using petroleum ether as a paint solvent and for cleaning purposes. It was desired to quantitate the amount of petroleum ether in the air being recirculated in this particular area. Petroleum ether is a distillation fraction from crude oil. Its boiling point is slightly lower than the boiling point of gasoline. This means that petroleum ether is not a single chemical entity, but a multitude of hydrocarbons in a certain boiling range fraction. Reasonable quantitative data can be obtained here without knowing the exact chemical composition of each hydrocarbon that composes petroleum ether . For this purpose, the Model 580B can be used to measure these vapors. The 580B is initially calibrated with the response factor set at 1.0 using a reference standard of isobutylene.

The 580B is calibrated on isobutylene. Then a bag sample is prepared, as detailed above, for the quantitation of the instrument to measure the petroleum ether. In this particular instance, the petroleum ether is injected into the bag in the same fashion that liquid samples are injected. The calculation, however, has to change slightly because the ppm on a volume basis cannot be calculated without knowing the exact chemical composition of the petroleum ether. However, in a situation such as this, one can still quantitate it on a weight basis of the solvent in air. The equations below show this calculation.

Weight Vapor (mg)=Liquid Volume (uL) x Density g/ml

$$\text{Conc (mg/m3)} = \frac{\text{Weight Vapor (mg x 1000}}{\text{Air Volume liters)}}$$

For Petroleum Ether In This Example:

Liquid Volume = 3 uL

Petroleum Ether Density = 0.66

Air Volume = 10 liters

Vapor Weight = 3 uL x 0.66 g/mL = 1.98 mg

$$\text{Conc} = \frac{1.98 \times 1000}{10} = 198 \text{ mg/m3}$$

This sample in the bag is then presented to the Model 580B and the response factor adjusted so that the digital readout on the front panel provides the proper reading in mg/m3. The setting of the response factor that is needed for this reading is noted. The Model 580B can now be used to monitor reasonably quantitatively the petroleum ether in the workplace environment. Any further calibration of the instrument can be done using the reference standard of isobutylene. This is a reasonably accurate

way of giving quantitative information on the amount of solvent in air even though the results are not reported in ppm on a volume basis.

This technique can be used in general when the solvents are a mixture of materials which in general will probably be petroleum distillation fractions. It would certainly also be used in the case of gasoline vapors in air. Notice from the equations used versus the equations for determining the ppm concentration in bag samples for pure liquids, the only real thing missing is the molecular weight of the material. It may be possible to assume an average molecular weight of the solvent mixture and actually report a ppm by volume basis.

5.5 LEAK SOURCING

In this particular instance, the Model 580B is to be used for determining the presence, or absence of leaks in a chemical process plant. The Model 580B is uniquely adapted to this particular operation due to its light weight. In this particular instance, it is not necessary to accurately attempt to quantitate the readings from the Model 580B. It will be used simply to determine presence of leaks and to locate these leaks.

The Model 580B is simply calibrated against a reference standard of isobutylene as normal. No further calibration is used. It is not necessary to know the particular chemicals flowing in the different pipes or what they are in the various reaction chambers. It is only necessary to know that these materials will have some response on the Photoionization Detector. That is, that their ionization potentials are below the energy of the lamp. The standard probe of the Model 580B, with the 580B fully operational, is then simply moved along the various pipes and reactor vessels in the chemical process.

All seals are traced clear around the seal with the end of the probe. As one approaches a leak, the concentration of the organic materials in the air being sampled by the Model 580B will increase significantly. The point of maximum reading will indicate the point of the leaks. As one moves further away from the leak, the concentration of the organics in air will certainly decrease. In this very rapid fashion, the presence of leaks can be detected and their source fairly accurately pinpointed so that the leak can be repaired.

In many instances, it is not necessarily the workplace hazards of these leaks that is important, but the economics of the chemical process itself. In this instance, as in many instances, the exact composition of the organic materials being measured is really unimportant to the successful use of the 580B in a specific application. Also the exact numbers that are displayed on the digital readout of the 580B are unimportant. It is only relative magnitudes that are important in this instance.

5.6 AFTERBURNER EFFICIENCY

In a particular coating process, the material, after it has been coated, is passed into a dryer where the solvents of the coating are removed. These solvents are then vented into a

stack. To reduce the hydrocarbon emission from this plant, an afterburner had been installed to combust the organic solvents from the coating prior to release to the atmosphere. It is important to determine the efficiency of this afterburner and to follow the efficiency of the afterburner to avoid dumping excess solvent into the atmosphere and, thus, become subject to pollution fines.

The Model 580B is ideally suited to this type of operation. Again, it will be unnecessary to know the exact chemical composition of the coating solvent. The Model 580B is simply standardized against the reference standard isobutylene in the usual fashion.

The Model 580B is then connected to sample the stack gas in the dryer prior to the afterburner, noting the steady state number displayed on the digital panel meter. The 580B is then connected to the exhaust gases from the stack following the afterburner.

Again, the steady state number, as displayed on the Model 580B, is noted.

The reading prior to the burner minus the reading after the burner divided by the reading prior to the burner times 100 gives efficiency of the afterburner in the stack. This number is quite accurate, even though the Model 580B was not calibrated specifically for the solvents or solvent mixture used in this particular coating operation. The individual readings before and after the afterburner may not have the exact quantitative relationship to the actual amount of material, but their ratio will be accurate since basically the same chemical or mixture of chemicals is being measured before and after the afterburner.

5.7 SAMPLE COLLECTION OF UNKNOWN ENVIRONMENTS

The Model 580B can also be used in areas where organics are known to be present, but perhaps the exact composition of the environment is not known. This may be due to several solvents being in the same general workplace or various separate processes occurring in that same workplace, all of which could and possibly are admitting organic vapors. In plant areas such as these, the Model 580B can still be extremely useful.

The 580B is calibrated against a reference standard of isobutylene, as mentioned above. The 580B is then used as a survey tool throughout the entire plant area. The readings are logged, especially changes in these readings. The exact numbers displayed will not, in general, be a quantitative measure of the ppm of the organic vapor since it is impossible to know what organic chemical or mixture of chemicals should be used for the calibration. When high readings are obtained on the Model 580B, an evacuated sample bag can be connected to the rear of the 580B at the sample exhaust port. This bag could be virtually identical to the type of bag used for standards preparation. The Model 580B is sampling the atmosphere at the rate of 500 ml/min. The detection system of Photoionization is a nondestructive system such that the sample that is exiting the Model 580B is indeed the same material that is giving the readings on the 580B. When the 580B is seeing high readings, this is the time the bag is con-

nected to the rear for sample collection. The bag, if the same type is used for sample preparation, can hold approximately 10 liters of air sample; which would permit a sampling time of 20 minutes.

This bag sample can then be closed on removal from the 580B and transported to a laboratory for subsequent analysis to identify the individual chemical compounds present in the sample causing the high readings and to ascertain if the workplace environment is harmful at those high readings.

The use of the Model 580B coupled with the bag collection ensures that the sample that is returned to the laboratory for analysis is a sample containing the desired organic vapors. This is assured because the bag collection is used only when the Model 580B is detecting high levels of organic vapor in the environment. This is an instance of the use of the Model 580B when the type of organic vapors are not known and it is desired to know them. The 580B has a very useful function even in these areas. It should be noted that a charcoal tube could be connected to the rear of the 580B as well as an evacuated plastic bag. The charcoal tube will pass the bulk of the sample, which is air, and adsorb the organic vapors. This charcoal tube can be returned to the lab for subsequent analysis for both a qualitative identification of the materials present as well as a quantitative measure of their levels.

SECTION VI

COLLECTION TECHNIQUES

6.1 GENERAL

As mentioned in the Application Section, it is possible to use the 580B in completely unknown areas as far as the organic vapors present are concerned and still obtain meaningful data. One of the techniques described here is the use of the 580B as a means of collecting the representative samples for further identification in the laboratory regarding the specific organics that may be present in addition to their concentrations.

Two techniques were mentioned in the section under the heading "Sample Collection of Unknown Environments". One of these techniques involves the use of a bag for collection and the other involves the use of charcoal tubes as a means of trapping organic vapors. In this section, each of these techniques will be explored in further depth as to the proper way of using the 580B to collect the samples for subsequent analysis. These collection techniques are quite useful when one is using the Model 580B simply as a survey instrument. When readings on the 580B become quite high in certain areas, it is impossible to determine the exact source of the high readings to perhaps pinpoint the specific organic chemical giving rise to the reading. One may very well want to identify what the chemical or chemical mixture is that is providing the high reading. This will have to be done with instrumentation significantly more sophisticated than the Model 580B; namely, an instrument that can provide specificity as well as qualitative identification. A Gas Chromatograph is such an instrument.

If it is desired to collect some of the air to send to a laboratory for further analysis, one needs to be sure that the proper samples are taken at the proper time. This means simply that one needs to be assured that the sample sent to the laboratory is indeed a sample that has a high concentration of organic vapor present in the sample. The 580B is used to indicate the presence of the high level organic vapors. The sample then is gathered at the exit port of the 580B when the 580B is reading high values. This assures that the sample sent to the laboratory does indeed have the high level vapors present in it. This generally simplifies the sampling technique of the environment and reduces the number of samples and, therefore, the expense needed to accurately identify the organics present and to quantitate them in a laboratory.

Two design features of the Model 580B make this type of operation possible. The first is that the detection system used in the Model 580B is the Photoionization Detector which is basically a nondestructive detector. Thus, the instrument is able to sense the organic vapor using the detector and virtually the same concentration of the same materials exits the detector as entered it. This does make it possible for the collection of the exact sample contributing to the high readings.

The second feature of the 580B that allows this sample collection is that a positive displacement pumping system is used to draw the sample into the Model 580B. It is a very simple procedure then connect to the exit of this positive displacement pump and trap the sample exiting the 580B after it has passed through the detector.

6.2 BAG SAMPLE COLLECTION.

One of the most convenient ways to sample the environmental air is to simply trap the entire air sample in a collection bag. As discussed before, the bags used for the calibration of the Model 580B, as discussed under the Calibration Section, can certainly be used for collection of the air samples. There are several precautions that must be mentioned immediately relative to the use of bag sample collection. When a bag has been filled with air that has organic vapor in the air sample, the organic vapor molecules will absorb onto the inside surface of the bag. This adsorption will begin immediately on introduction of the air into the bag. It will continue to progress with time until the vapor molecules that adsorb onto the wall of the bag are in equilibrium with the vapor molecules in the air. This equilibrium depends very strongly on the bag material and the chemical entity of the vapor itself. The ambient temperature also has some effect.

As mentioned under the Calibration Procedure, when one is preparing a known vapor concentration in a bag, the bag should be analyzed very rapidly after its preparation to ensure proper calibration of the instrument. The technique here is to use the standard prepared in this fashion as soon as possible such that the adsorption that has occurred is an absolute minimum amount. This adsorption becomes a bit more serious problem in using bags for sample collection. The first problem is simply when one is reusing the bag, one has to be sure that the sample contained in the bag previously has been completely desorbed from the wall. This, in general, can be checked by using clean air to fill a bag allowing the bag to set for a short period of time, about 1 hour, and then analyzing the air in the bag. If on using the 580 to analyze this air, it shows measurable organics, then the air in the bag should be dumped and new air introduced and allowed to set for the same period of time. There will be a reduction of organic vapor on the second go-around.

If it is still too high, this procedure is repeated until the bag shows virtually no organic vapor. The bag can be evacuated and reused.

The other problem associated with adsorption and sample collection is that the sample that is collected in the bag must be analyzed as soon as possible after collection if one is going to determine quantitatively the amount of organic vapor in that bag sample. The longer the sample stays in contact with the bag, the greater the adsorption will be of the organic vapors on the surface of the bag and, therefore, the lower the concentration of the organic vapors in the air sample.

If one is interested here in only doing a qualitative analysis of the organic vapors, that is identify what vapors are

present in the air sample, the bag certainly is a convenient way of taking the sample. If one in addition to getting the qualitative analysis desires to quantitate one or more of the specific organic vapors in the sample, the bag sample should be analyzed within an hour of taking this sample. If the bag sample cannot be analyzed this soon, it is recommended that one use the charcoal tube technique explained in the next section.

There are two considerations to be given relative to the size of the bag and, therefore, the size of the sample taken. The first consideration is the amount of sample needed by the laboratory for its analysis. If the analysis is to be done by gas chromatography directly on the air sample, in general only 1 to 5 mL of sample would be required for the analysis. Therefore, this does not become a major consideration here. If, however, other analytical techniques were to be used that would require significantly higher volumes of sample, this should be taken into account.

The other consideration is the sampling time. The Model 580B samples at the rate at which the bag attached to the exit port of the 580B will be filled. If the bag can conveniently hold 10 liters of air, this means that the sampling time can be up to 20 minutes. In general, collection techniques using the Model 580B are not intended to supply a four or eight hour integrated sample. They are used simply to help identify the materials contributing to a high concentration and possibly the analysis of individual toxic organic vapors in that particular air sample. Thus, a 20 minute limitation on sampling time should not be too severe.

Certainly larger bags could be used on the exit of the 580B, allowing up to several hours of sampling time should this be desired. The difficulty then becomes that the bags are quite large and physically become difficult to manipulate. It was recommended back in the Calibration Section that perhaps a 10 liter bag would certainly be the convenient bag for the calibration of the 580B. It would appear to be also a convenient bag for collection of the samples. For this purpose, a bag that has no adsorbed vapors on the interior surface is evacuated and closed to the atmosphere. Several of these bags could be carried in a very small container. When the Model 580B is reading high values, and it is impossible to determine the source of the high values, then a bag can be connected to the exit port of the 580B and immediately opened to accept the sample exiting the 580B. The bag is kept connected to this exit as long as the 580B is giving high readings or until the bag has reached its volume capacity. At this point, the bag is removed from the exit port of the 580B, immediately closed, and returned to the laboratory for analysis.

6.3 COLLECTION USING CHARCOAL TUBES

A technique very common in industrial hygiene-type analysis is to use a small charcoal tube as a collection device. An air sample is pulled through the charcoal tube at a known flow rate for a known period of time. This flow rate and time determine the total volume of air or total sample size. The organic vapors

in the air are adsorbed on the charcoal in the tube. These vapors are then desorbed from the charcoal by adding a known volume of desorbing solvent, usually carbon disulfide. The organics end up in the carbon disulfide. The carbon disulfide is then injected into a gas chromatograph using Flame Ionization Detection. The individual organic vapors can then be identified and quantitated.

The usual charcoal tubes that are used for this type of work contain two sections. One section has approximately 100 milligrams of charcoal and a backup section has 50 milligrams. The backup section is analyzed separately from the main section to determine if there is organic vapor breakthrough in the main section. These particular size tubes have a recommended maximum flow in the neighborhood of 250 to 300 mL/min. The exit of the Model 580 is at 500 mL/min. The most advantageous way of using a smaller charcoal tube would be to split the exit stream and pass it through two parallel charcoal tubes. This would give approximately 250 mL through each tube. For analysis purposes, the charcoal of each tube is removed and combined using double the amount of solvent that would be required for a single tube.

The amount of total air that can be passed through charcoal tubes certainly depends on the concentration of organic vapor in the air. It also depends to some extent on the particular organic vapor. In general, a total sample through the smaller charcoal tube of 10 liters is a reasonably safe number to use. Since the flow is split exiting the 580B using the smaller charcoal tubes, only 250 ml/min is going through the tube. It would take 40 minutes to accumulate 10 liters passing through each of the tubes. There are charcoal tubes available in the marketplace containing 300 milligrams of charcoal in the front section and 150 milligrams of charcoal in the rear section. These tubes have correspondingly larger diameter and can accommodate higher volumetric throughputs. One of these tubes could be hooked to the exit of the 580B without doing the split. Conceivably since it contains 3 times the amount of charcoal, a safe operating total volumetric throughput would be approximately 30 liters. This would be a full hour's operating time on the Model 580B. Again, it must be stressed that the 580B when used in the particular form, is not being used as a personnel sampler to end up with the time weighted average concentration over an eight hour period. The intent here is to identify the high level organics observed on the 580B and to quantitate them following identification to determine the safe working area.

SECTION VII

COMMUNICATION

The 580B provides a serial (as opposed to parallel) communication port. There is also a communication cable provided for easy link up to a serial printer or RS-232 port of a computer. Logged data may be "dumped" (sent through the communication port) to a serial printer. Many of the 580B parameters may be set by a remote computer by using the serial port and the 580B communication software (the software is an option, part number 580A-9014).

Note: The serial port is not to be used in a hazardous location

PRINTER

The 580B can be instructed to send all of its logged data through the serial port to a printer (or a dumb terminal). The 580B printer mode should be selected (see Section 2.7.4).The serial communication cable should then be plugged into the RS-232 port at the rear of the instrument and the other end of the cable plugged into the serial port of a printer. The 580B should finally be instructed to output to the printer (see section 2.7.1).

COMPUTER

The 580B provides capabilities for remote operation. Appendix A includes a detailed technical explanation of the 580B printer and computer interface protocol. The information in this appendix is sufficient for custom software to be developed for interfacing to the 580B. Thermo Environmental however has developed communication software which implements all of the available communication capabilities in a simple "menu driven" format. Remote communication may also be accomplished by using generic communication software package such as CrossTalk. Appendix A will be helpful if this route is taken.

NOTE: Generally, the RS-232 port on an IBM PC (or compatible) is a male connector. Since the communication cable provided with the 580B is also male, a "gender changer" (a DB-25 connector which converts from male to female) is needed.

7.3 COMMUNICATION SOFTWARE (OPTIONAL)

There is communication software available which will run on an IBM PC or compatible. The software provides the capability of obtaining or changing the 580B parameters (alarm setting, response factor, or operating mode to name a few). Logged data may be stored to disk or printed to a parallel printer. Concentrations may be read and displayed on the computer screen. There are a few operations which may not be accomplished remotely (for obvious reasons). The lamp may not be changed remotely. The lamp and pump may not be turned on from the computer either.

NOTE: The communication software will not work unless the 580B is attached via the communication cable.

7.3.1 HOW TO GUIDE FOR COMMUNICATION SOFTWARE

#1. The 580B must be turned on and connected to the computer's RS-232 port. The 580B must be in the computer mode (this is the default setting).

#2. The floppy disk should be inserted into the computer. Type 580B (this software was originally developed for the 580B) and then hit return. The introduction screen will appear.

#3. The software defaults to 2400 baud (as does the 580B). If some other baud rate is desired it must match the setting on the 580B.

#4. After selection of the baud rate press return. The main menu will appear.

NOTE: If the computer's screen goes blank and the main menu does not appear, then there is a problem with the communication link. Check to be sure that the communication cable is plugged into the RS-232 port and that the 580B is on.

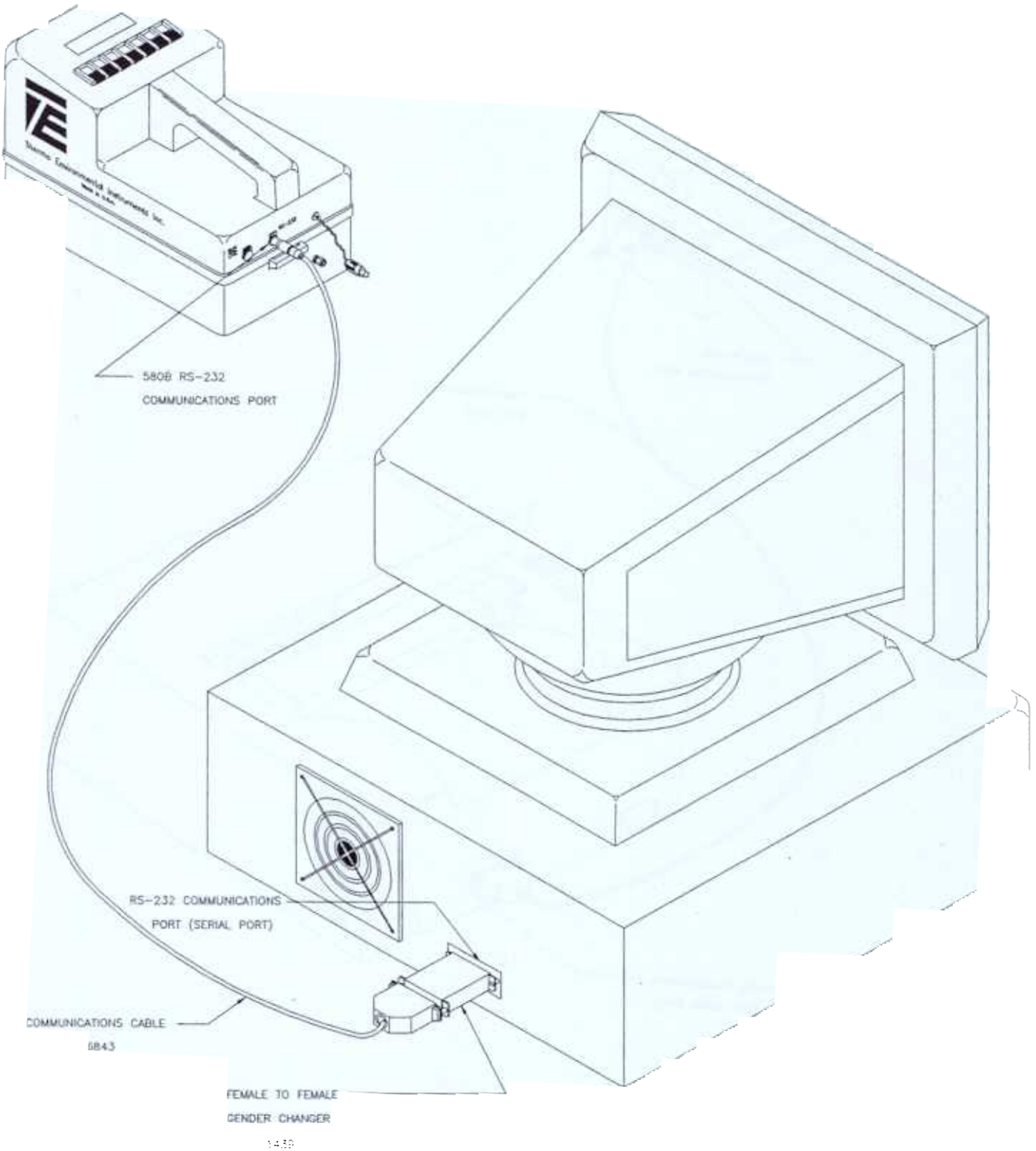

Fi
Se .al in Communi

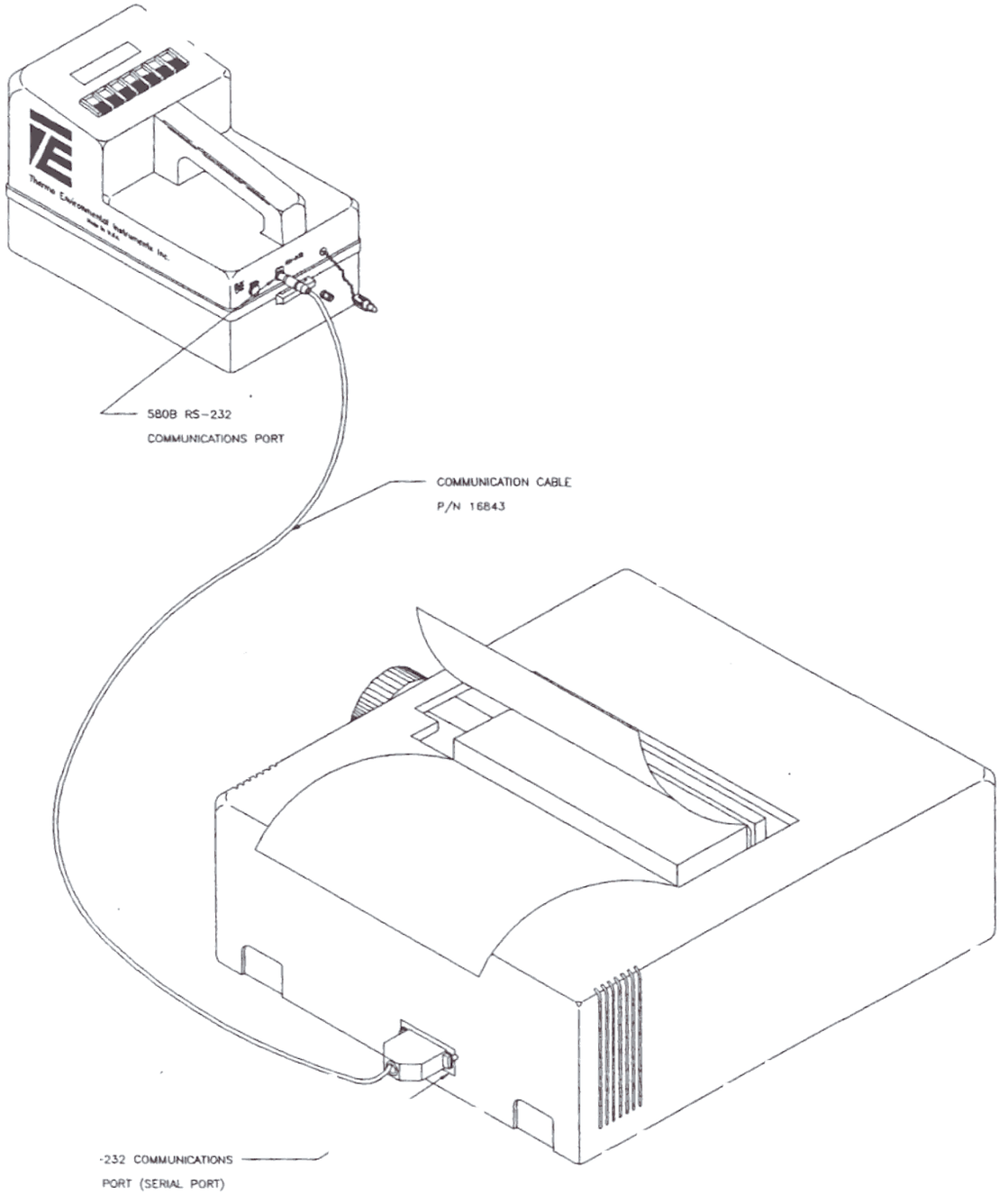

Figu
Compu Communi ion

SECTION VIII

FLOW CHART

There are two flow charts which illustrate the structure of the 580B software. The first is a "Quick Start-up" flow chart. Much of the detail is not included in this flow chart in order to diagram the basic structure of the software. The second flow chart includes extensive detail of each screen and the function of the seven buttons. These flow charts provide an easy method for determining how to get at each of the many facilities provided by the 580B.

8.1 QUICK START-UP

The Quick Start-up flow chart shows each of the top level screens. The screens are ordered according to the hierarchy of the 580B software. The particular button (which advanced the 580B to the next screen) is shown in parenthesis above each screen. This flow chart does not illustrate any of the associated screens or operations (see the detailed flow chart for more in depth information).

The Quick Start-up flow chart should be fully understood before moving on to the more detailed flow chart. The best way to learn each of the flow charts is to have the 580B with you and to follow along verifying each step.

8.2 DETAILED FLOW CHART

The detailed flow chart illustrates many of the lower level screens as well as the function of buttons. Screens are shown in rectangles with the text written inside. The buttons are shown in ellipses (actually a rather flattened ellipse) with the button identifier written inside. There are a few conventions which need to be explained. The button identifiers have been abbreviated. For example the +/INC button is simply denoted as +. When two buttons need to be pressed simultaneously each identifier is shown with a slash between them. For example RESET/+ indicates that the RESET and +/INC buttons should be pressed together. Arrows indicate the direction of flow from one screen to the next.

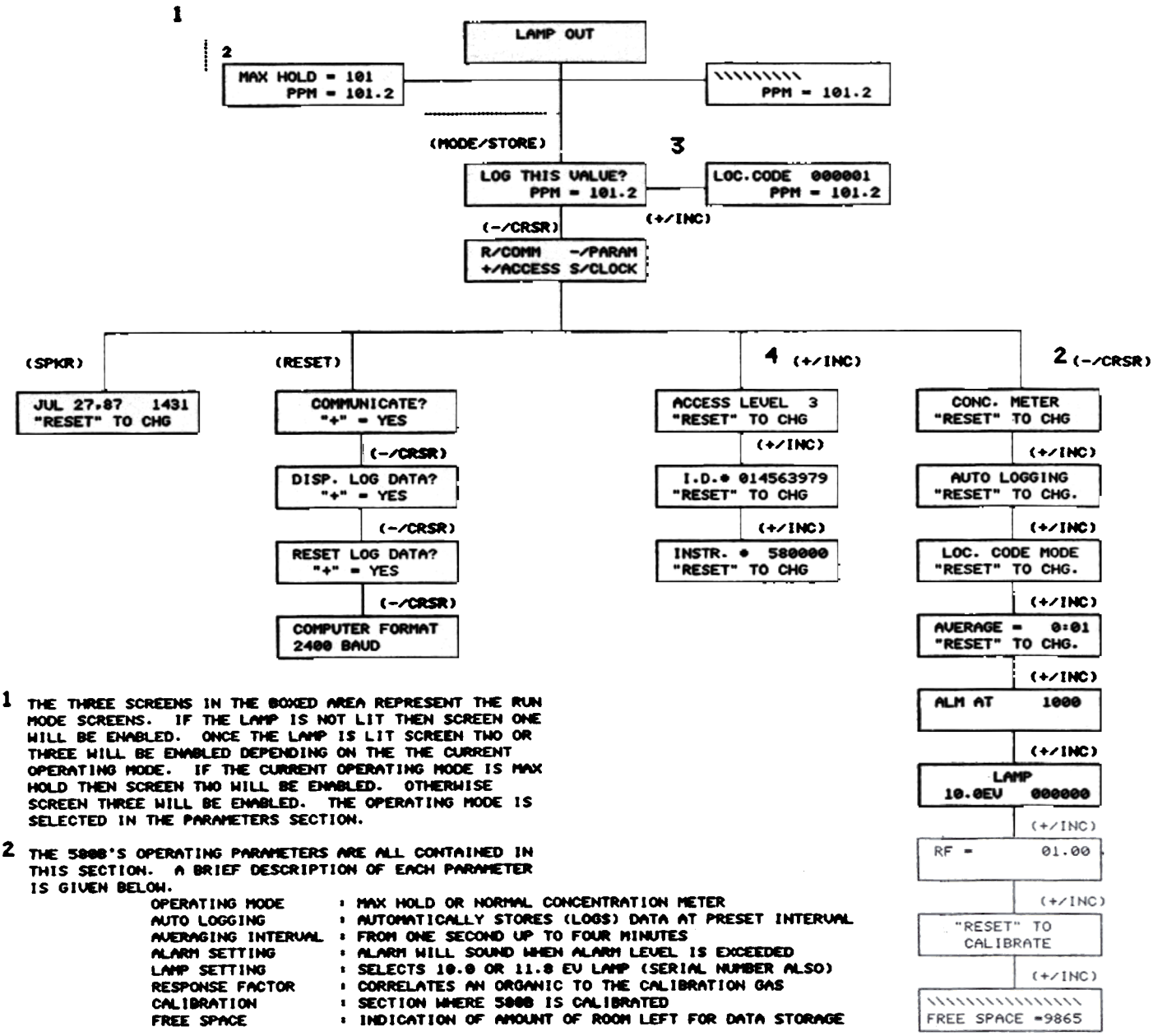

1 THE THREE SCREENS IN THE BOXED AREA REPRESENT THE RUN MODE SCREENS. IF THE LAMP IS NOT LIT THEN SCREEN ONE WILL BE ENABLED. ONCE THE LAMP IS LIT SCREEN TWO OR THREE WILL BE ENABLED DEPENDING ON THE THE CURRENT OPERATING MODE. IF THE CURRENT OPERATING MODE IS MAX HOLD THEN SCREEN TWO WILL BE ENABLED. OTHERWISE SCREEN THREE WILL BE ENABLED. THE OPERATING MODE IS SELECTED IN THE PARAMETERS SECTION.

2 THE 580B'S OPERATING PARAMETERS ARE ALL CONTAINED IN THIS SECTION. A BRIEF DESCRIPTION OF EACH PARAMETER IS GIVEN BELOW.

OPERATING MODE	: MAX HOLD OR NORMAL CONCENTRATION METER
AUTO LOGGING	: AUTOMATICALLY STORES (LOGS) DATA AT PRESET INTERVAL
AVERAGING INTERVAL	: FROM ONE SECOND UP TO FOUR MINUTES
ALARM SETTING	: ALARM WILL SOUND WHEN ALARM LEVEL IS EXCEEDED
LAMP SETTING	: SELECTS 10.0 OR 11.8 EV LAMP (SERIAL NUMBER ALSO)
RESPONSE FACTOR	: CORRELATES AN ORGANIC TO THE CALIBRATION GAS
CALIBRATION	: SECTION WHERE 580B IS CALIBRATED
FREE SPACE	: INDICATION OF AMOUNT OF ROOM LEFT FOR DATA STORAGE

3 THESE ARE THE SCREENS USED FOR LOGGING (STORING) DATA POINTS. AFTER ENTERING THE DESIRED LOCATION CODE, SIMPLY PRESSING THE MODE/STORE SWITCH WILL LOG THE VALUE (AS WELL AS A DATE AND TIME STAMP) AND RETURN OPERATION TO THE RUN MODE.

4 THE ACCESS (SECURITY) LEVEL IS SET IN THIS SECTION. ACCESS LEVEL THREE GIVES THE OPERATOR ACCESS TO ALL OF THE 580B'S FACILITIES. LOWER ACCESS LEVEL ZERO ARE PROGRESSIVELY MORE RESTRICTIVE. ACCESS LEVEL ZERO ONLY ALLOW READING AND LOGGING OF DATA.

Figure 8.1
Quick Flow Chart

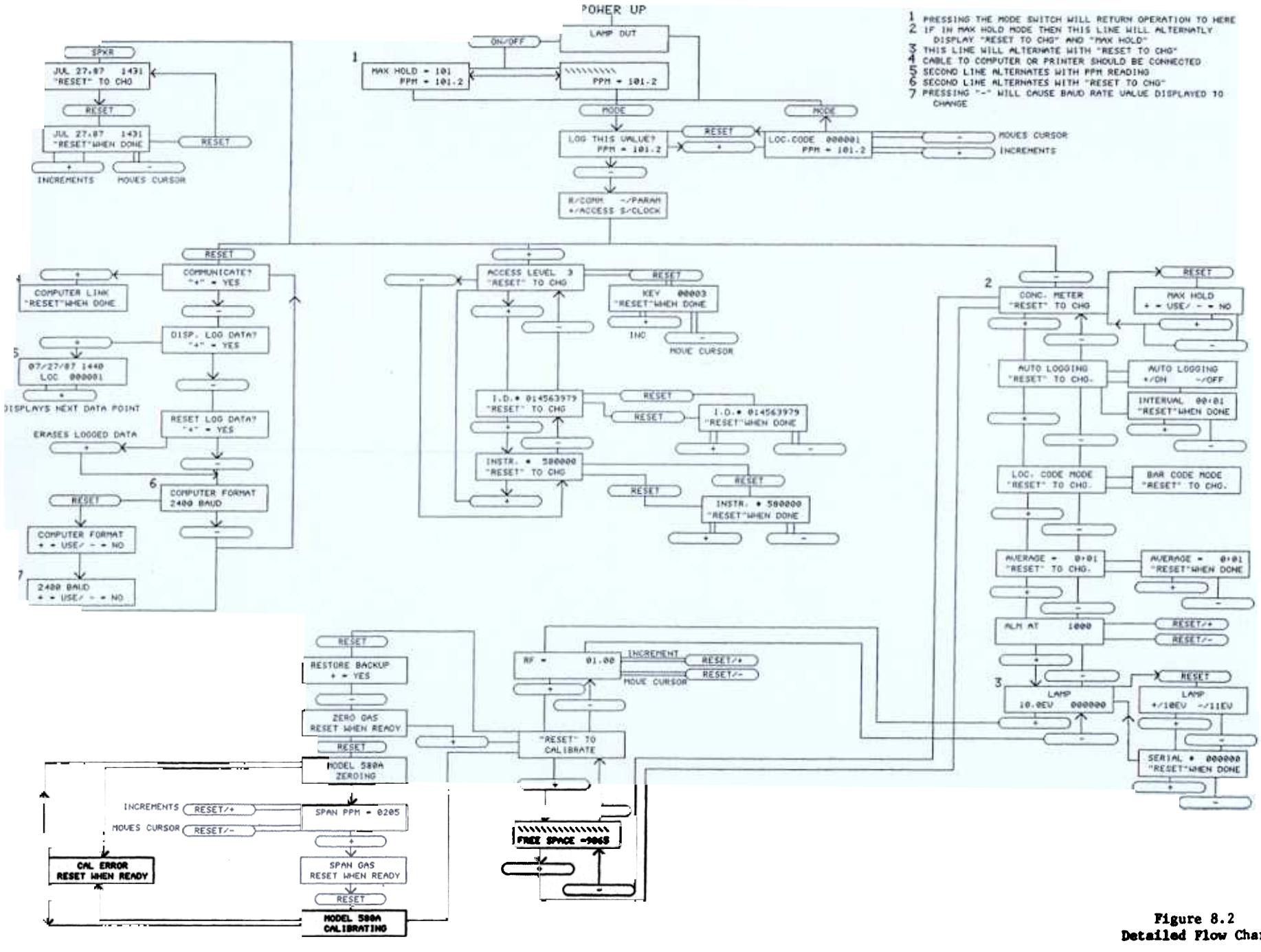

Figure 8.2
Detailed Flow Chart

APPENDIX A

COMMUNICATION

A.1 INTRODUCTION

The 580B is capable of communicating over an RS-232 link with any peripheral device which adheres to the communication protocol outlined in this document. The 580B will communicate with a peripheral device in one of two modes. While in the PRINTER mode the 580B responds to commands from its keypad and can be commanded to send characters out its RS-232 port to a peripheral device. In the COMPUTER mode the 580B responds to commands from a peripheral computer and can be commanded to send and receive data and to perform other tasks. Regardless of the mode used, the 580B sends and expects to receive data in the following format:

No Parity
1 Start Bit
8 Data Bits
1 Stop Bit
Baud Rate = 150, 300, 600, 1200, 2400, 4800 or 9600

The Baud Rate may be selected from the 580B keypad (see Section 2.7)

A.2 PRINTER MODE INTERFACE

In the PRINTER mode the 580B can be instructed to send its log data out the RS-232 port to a peripheral device such as a printer.

The 580B can be manually instructed from its keypad to output its log data. In this case the 580B sends all the log data points it has acquired thus far. The log data is saved in 580B memory and will NOT be automatically erased upon output. While in the PRINTER mode, the 580B log data file must be erased (reset) from the keypad. An example of a log data output is shown on page A-17. Notice that the 580B also sends header information which includes the following parameters: instrument number, user ID, and mode of operation. The date at the top of the header corresponds to the time when the first log data point was taken with the parameters set as shown in the header. If any of the parameters are changed and then new log data points are acquired, the 580B will send an updated header before it sends the new data points. It is also important to note that every log data point is time stamped to show when it was stored.

HARDWARE INTERFACE, PRINTER MODE

```
580B              PERIPHERAL

TxD  (B)_          )RxD
CTS  (E)(          _DTR (or "printer ready")
GND  (A)___________GND
```

The connections shown above are required before the 580B can successfully send its log data to the peripheral. An example of a cable used for PRINTER MODE communication is shown below:

SAMPLE CABLE, 580B TO HP THINKJET PRINTER

```
580B              PRINTER

TxD (B)________)RxD (3)
CTS (E)(________DTR (20)
GND (A)_________GND (1)
GND (F)_________GND (7)
```

Thinkjet connector = TRW/CINCH DB-25P plug connector

Please remember that the 580B must be placed into the PRINTER mode prior to output of log data to a printer. This is done from the 580B keypad.

HARDWARE HANDSHAKING, PRINTER MODE

The 580B will send log data out the port to a peripheral device as long as its CTS line is asserted (+V). If the peripheral has temporarily fallen behind, and consequently clears its DTR line (-V), the 580B will stop transmitting data. It will resume transmitting as soon as the peripheral reasserts (+V) its DTR line.

A.3 COMPUTER MODE INTERFACE

In the COMPUTER mode the 580B will respond to commands sent by a peripheral computer. The 580B will respond to 3 types of commands; DO, GET, and SET commands.

An example of a DO command is "DO RESET LOG (ret)" in which the 580B is instructed to reset its log which, in effect, clears all previously stored log data points.

A GET command such as "GET ALARM (ret)" allows the peripheral to change a specified parameter in the 580B to a value provided by the peripheral.

A combination of DO, SET, and GET commands allow the operator at the peripheral to perform a variety of functions needed to prepare a 580B for acquiring data.

The 580B can also be operated under "computer control". For example, the 580B can be commanded to acquire readings at specified intervals and then store the readings in a log data file.

The 580B can subsequently be commanded to send its log data to a printer, a file or the screen of the peripheral computer. This can all be accomplished through commands issued by the peripheral computer. So, effectively the 580B is under "computer control".

HARDWARE INTERFACE, COMPUTER MODE

```
580B              COMPUTER

TxD (B)__________)RxD
RxD (C)(__________TxD
CTS (E) __________DTR
                   ___DSR
GND (A)___________GND

                   ___CTS
                 !___RTS
```

The connections shown above are required before the peripheral computer can successfully communicate with the 580B. In addition, the 580B must be placed into COMPUTER mode. This is done from the 580B keypad.

An example of a cable used for COMPUTER MODE communication is shown below:

SAMPLE CABLE, 580B TO IBM PC

```
580B              COMPUTER

TxD (B)________)RxD  (3)
RxD (C)(________TxD  (2)
CTS (E)(________DTR (20)
            !___DSR  (6)

GND (A)________GND   7)
            !___GND   1)

             ___CTS  (5)
            !___RTS  (4)
```

If the peripheral's DTR line is asserted (+V), the 580B will look for and then respond to peripheral commands. As long as DTR remains high, the 580B will NOT perform functions such as counting, updating the display, storing log data, etc. If DTR is asserted, the 580B will display the following message:

"COMPUTER LINK"
"WAITING FOR COMM"

The 580B must be allowed 100ms between the time the peripheral asserts DTR and the time it sends the 580B its first message. If the 580B is busy communicating the display will read:

"COMPUTER LINK"
"COMMUNICATING"

When DTR is low (-V), the 580B will return to its normal mode of operation where it counts, updates the display, etc. and will NOT respond to peripheral commands.

XON/XOFF HANDSHAKING, COMPUTER MODE

If the 580B is transmitting log data and detects that an XOFF has been received, it will stop transmitting. The 580B will not resume transmission until the peripheral device sends XON. The 580B will respond to XON and XOFF characters only if it is NOT communicating with the computer (i.e., if 580B CTS is NOT asserted).

It is important to note that if the 580B receives an XOFF it will stop transmitting and will simply wait for the peripheral to send XON, it will not acquire data, update the display or perform other functions. The 580B is essentially "locked up" until it receives XON. For this reason, it would be good programming practice to send out an XON to the 580B prior to 580B/peripheral communication and afterwards also. Consequently, if an XOFF character is sent to the 580B inadvertently, the 580B will not be locked up indefinitely.

PERIPHERAL/580B COMMAND MESSAGES

A command message is a string of upper-case ASCII characters terminated by an ASCII carriage return. The carriage return may immediately follow the command or a space may separate the command and the carriage return as shown in the example below. The command messages which the 580B will accept from the peripheral are listed in TABLE A.1. The 580B will accept the messages as shown in TABLE 1 or the command portion of the message can be abbreviated as follows:

"S R F 01.00 (ret)" instead of
"SET RESPONSE FACTOR 01.00 (ret)"

Please note that the abbreviation must contain the first letter of each and every word of the command. There are some additional guidelines for abbreviating the SET OPERATING MODE commands.

If the abbreviated version of a command is sent, an ASCII blank must separate each letter of the command and must separate the command from the data. Note that the command message will contain data only if a SET command is being sent.

If the spelled-out version of a command is sent, an ASCII blank must separate each word of the command and must separate the command from the data.

Every SET command message contains a data value. The data sent as part of a SET command must conform to the formats described in TABLE A.1. It is important to note that the 580B does NOT perform error-checking on data sent as part of a SET command.

It is up to the user to insure that the data value is "reasonable" and formatted as shown in TABLE A.1.

The following are examples of valid command messages:

"SET ACCESS LEVEL 3 (ret)"
or "S A L 3 (ret)"

"SET REAL TIME 02/15/86 1723 (ret)"
or "S R T 02/15/86 1723 (ret)"

580B/PERIPHERAL RESPONSE MESSAGES

A response message is a string of upper-case ASCII characters terminated by an ASCII carriage return. The response messages which the 580B will send to the peripheral are listed in TABLE A.1. The messages which the 580B sends in response to a GET command contain data formatted as shown. The notes which follow TABLE A.1 describe the GET command response messages in more detail.

SOFTWARE HANDSHAKING, COMPUTER MODE

Every command message must be preceded by the "WAKE UP/PROCEED" sequence. This sequence begins when the peripheral sends a WAKE UP ("?") character to the 580B. The 580B must respond with a PROCEED ("!") character before the computer can send a command message. In the discussion to follow, the WAKE UP/PROCEED sequence will be referred to as (WAKE UP/PROCEED).

The peripheral sends command messages to the 580B an entire line at a time. When the 580B receives the command line it will echo the line back to the peripheral. The peripheral will examine the echo to determine if the 580B received the command correctly. If the echo was correct, the peripheral will signal the 580B with the PROCEED character. The 580B will then perform the task specified by the command message. In the discussion ahead, the command message and echo sequence will be referred to as (COMMAND/ECHO/PROCEED).

The software handshaking sequences for each of the 3 types of commands are given below:

DO COMMANDS

The handshake sequence for a DO command is as follows:

1. (WAKE UP/PROCEED)
2. (COMMANDS/ECHO/PROCEED)
3. 580B performs task
4. 580B sends PROCEED or ERR

If the 580B was able to successfully complete the task it will send a PROCEED character in step 4, otherwise it will send the error message ("ERR").

GET COMMANDS

The handshake sequence below applies to all of the GET commands with the exception of GET LOG DATA and GET CONTINUED LOG:

1. (WAKE UP/PROCEED)
2. (COMMAND/ECHO/PROCEED)
3. 580B sends data message
4. Peripheral echoes data message
5. 580B sends PROCEED or ERR

The message sent by the 580B in response to a GET command are shown in TABLE 1. When the peripheral receives the message containing the data it echoes the entire message back to the 580B. If the echo is correct the 580B will send the PROCEED character so that the peripheral knows it received the data correctly. If the echo is not correct, the 580B will send "ERR".

The GET LOG DATA and GET CONTINUED LOG commands differ from the other GET commands in that the 580B sends an indefinite number of data values. The handshake sequence for these commands is as follows:

1. (WAKE UP/PROCEED)
2. (COMMAND/ECHO/PROCEED)
3. 580B sends a log data point message
4. If message = "EOT" (end of transmission) then DONE, otherwise go on to step 5.
5. Peripheral echoes entire message
6. 580B sends PROCEED or ERR
7. Peripheral sends PROCEED
8. Go to step 3

In step 4, the 580B sends "EOT" if it has sent all the log data points available. If some time later the peripheral sends "GET CONTINUED LOG (ret)" the 580B will send any additional data points it may have acquired since the GET LOG DATA command. In step 6, the 580B will send PROCEED if the peripheral echoed the message correctly in step 5. The 580B will also increment its data buffer pointer. If however, the peripheral did <u>NOT</u> correctly echo the message in step 5, the 580B will send "ERR" in step 6 and will <u>NOT</u> increment its data buffer pointer. This means that the next time through step 3, the 580B will send the same data point again. In either case, the peripheral must send a PROCEED in step 7.

COMMANDS

handshaking sequence for a SET command is as follows:

1. (WAKE UP/PROCEED)
2. (COMMAND/ECHO/PROCEED)
3. 580B sets parameter to value
4. 580B sends PROCEED or ERR

In step 3 the 580B sets the parameter specified by the command to the value provided by the peripheral in the command message. The data value sent in the SET command message must be formatted as shown in TABLE 1. If the 580B is able to successfully set the parameter it will send the PROCEED character, otherwise it will send "ERR".

NOTE: The flowcharts shown in Figures A.1 - A.4 are included to further explain the software handshaking sequences required for successful communication between the peripheral and the 580B.

TABLE A.1
MESSAGE FORMATS

PERIPHERAL COMMAND	580B RESPONSE
DO COMMANDS	
DO END COMMUNICATIONS (ret	! (ret)
DO RESET LOG (ret)	! (ret)
GET COMMANDS	
GET ACCESS LEVEL (ret)	ACCESS LEVEL I (ret)
GET ALARM SETTING (ret)	ALARM SETTING IIII (ret)
GET CONTINUED LOG (ret)	(see notes which follow)
GET INSTRUMENT NUMBER (ret)	INSTRUMENT # IIIIII (ret)
GET LOCATION CODE (ret)	LOCATION CODE IIIIII (ret)
GET LOG DATA (ret)	(see notes which follow)
GET OPERATING MODE (ret)	OPERATING MODE: ASCII (50) (ret)
GET MAX READING (ret)	LAST MAX VALUE IIII ASCII (8) (ret)
GET RATEMETER READING (ret)	LAST CONC VALUE IIII ASCII (8) (ret)
GET REAL TIME (ret)	REAL TIME CLOCK II/II/II IIII (ret)
GET USER ID (ret)	USER I.D. # IIIIIIIII (ret)
GET RESPONSE FACTOR (ret)	RESPONSE FACTOR II.II (ret)
GET SPAN CONCENTRATION (ret)	SPAN CONCENTRATION IIII (ret)
GET VERSION NUMBER (ret)	580B VERSION 1.0 (ret)
GET LOGGING INTERVAL (ret)	I:II (ret)
SET COMMANDS	
SET ACCESS LEVEL I (ret)	! (ret)
SET ALARM SETTING IIII (ret)	! (ret)
SET INSTRUMENT NUMBER IIIIII (ret)	! (ret)
SET LOCATION CODE IIIIII (ret)	! (ret)
SET OPERATING MODE ASCII (50) (ret)	! (ret)
SET REAL TIME II/II/II/ IIII (ret)	! (ret)
SET USER ID IIIIIIIII (ret)	! (ret)
SET RESPONSE FACTOR II.II (ret)	! (ret)
SET SPAN CONCENTRATION IIII (ret)	! (ret)
SET LOGGING INTERVAL I:II (ret)	! (ret)

NOTES ON TABLE A.1

The peripheral will receive data back from the 580B in response to a GET command only. The 580B response to a DO or SET command is the PROCEED ("!") character. This is because the 580B does not actually return data but signals the peripheral with the PROCEED character if it was able to perform the task requested. If for some reason the 580B is unable to perform the task it will send an error message "ERR" rather than PROCEED.

The data values sent by the peripheral as part of a SET command message and the data received by the peripheral in response to a GET command must be formatted as shown in TABLE A.1.

The data format codes used in TABLE 1 are described below:

I	a single digit
III...II	an integer "string", the number of I's shown indicates the length of the string. Note: the "string" MUST be the length specified, use leading zeros if necessary.
ASCII (n)	an ASCII string with a maximum of n characters

Several of the command messages listed in TABLE 1 require additional explanation. These comments are listed according to the command name:

DO RESET LOG

This command instructs the 580B to clear its log data file All log data values acquired previously will be erased.

GET CONTINUED LOG

This command instructs the 580B to send any log data points acquired since the last GET LOG DATA command. The format of the 580B response will be the same as the response to the GET LOG DATA command.

GET LOG DATA

This command instructs the 580B to send all of its log data points. The log data file is saved in 580B memory and is NOT automatically erased upon output. The log data file may be erased (reset) with the DO RESET LOG command.

GET OPERATING MODE

The 580B responds to a GET OPERATING MODE command by sending a string "MODE: ", followed by an ASCII string which describes the current 580B mode of operation. The 580B responses to the

GET OPERATING MODE command are listed below:

OPERATING MODE: CONCENTRATION METER NORMAL
OPERATING MODE: CONCENTRATION METER MAX HOLD

GET MAX READING

The 580B responds to a GET MAX READING command by sending the max value as shown in TABLE A.1. After the 580B sends the max reading it resets the max value to 0.

GET REAL TIME

The 580B will return its real time as an ASCII string in the following format: "05/29/86 1422"

SET ACCESS LEVEL

The access level must be an integer in the range 0 to 3

SET INSTRUMENT NUMBER

The instrument number is a string of 6 integers. If the instrument number = 2 then the number must be represented as 000002 (i.e. leading zeros must fill in excess spaces). An example of a valid SET INSTRUMENT NUMBER command is "SET INSTRUMENT NUMBER 000002 (ret)".

SET LOCATION CODE

The location code is a string of 6 integers. If the location code = 234 then the correct SET LOCATION CODE command is "SET LOCATION CODE 000234 (ret)". (Leading zeros must fill excess spaces.)

SET OPERATING MODE

As shown in TABLE A.1, the command SET OPERATING MODE must be followed by an ASCII string which describes the mode. The list of valid SET OPERATING MODE commands along with valid abbreviations are listed below:

SET OPERATING MODE CONCENTRATION (ret)
S O M C (ret)

SET OPERATING MODE MAX HOLD (ret)
S O M M H (ret)

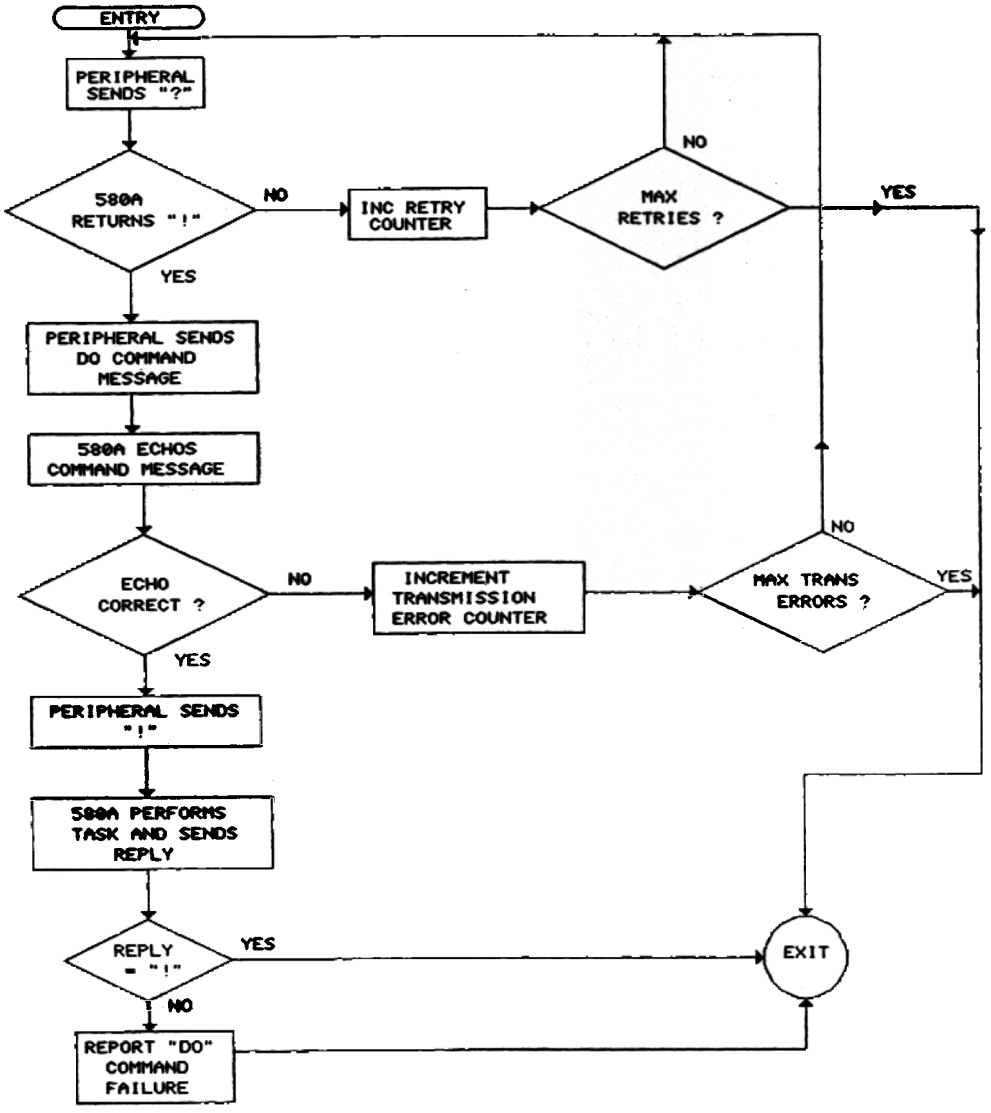

Figure A.1
Software Handshake
Do Commands

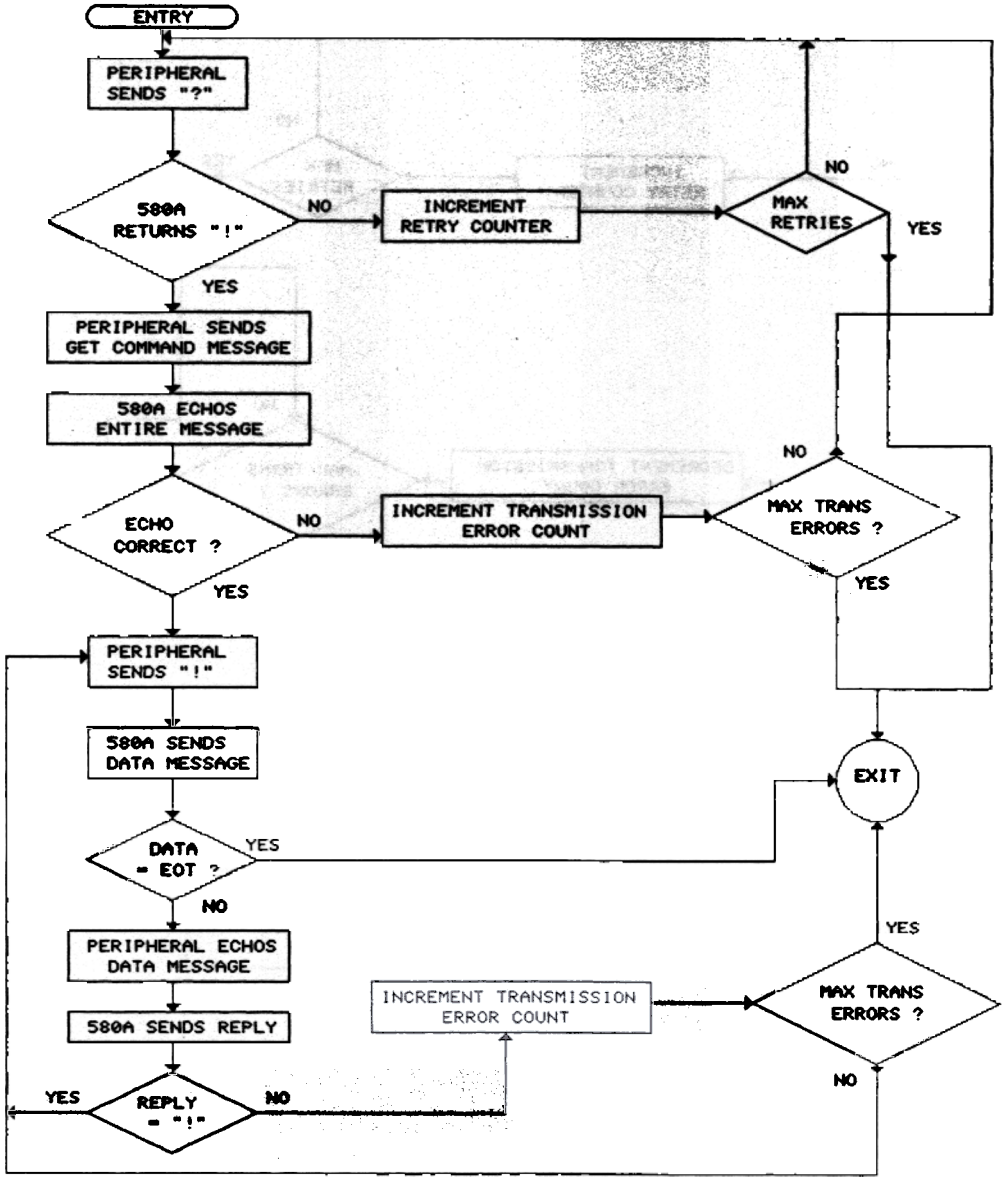

Figure A.2
Software Handshake
Get Log Data, Get Continue Log Command

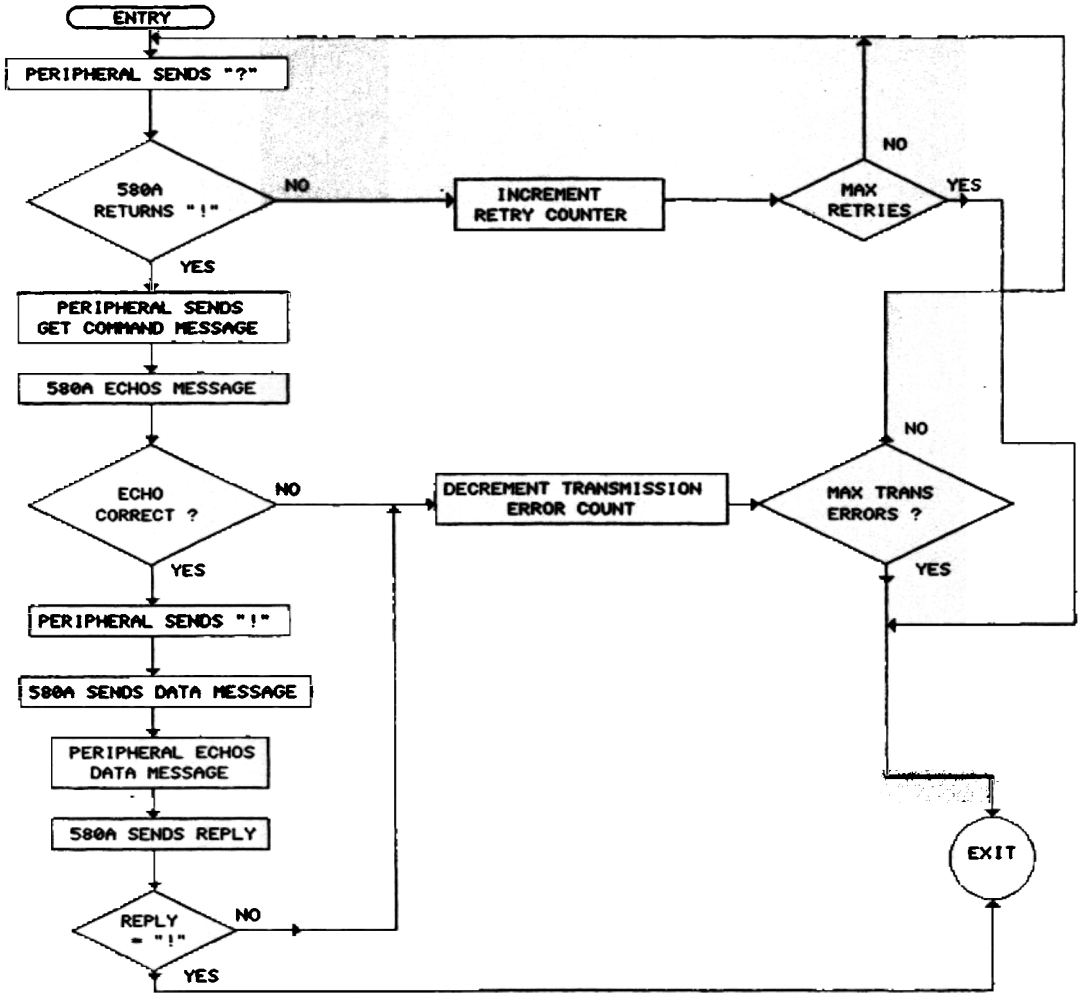

Figure A.3
Software Handshake
Get Command
(Except Get Log Data, Get Continue Log)

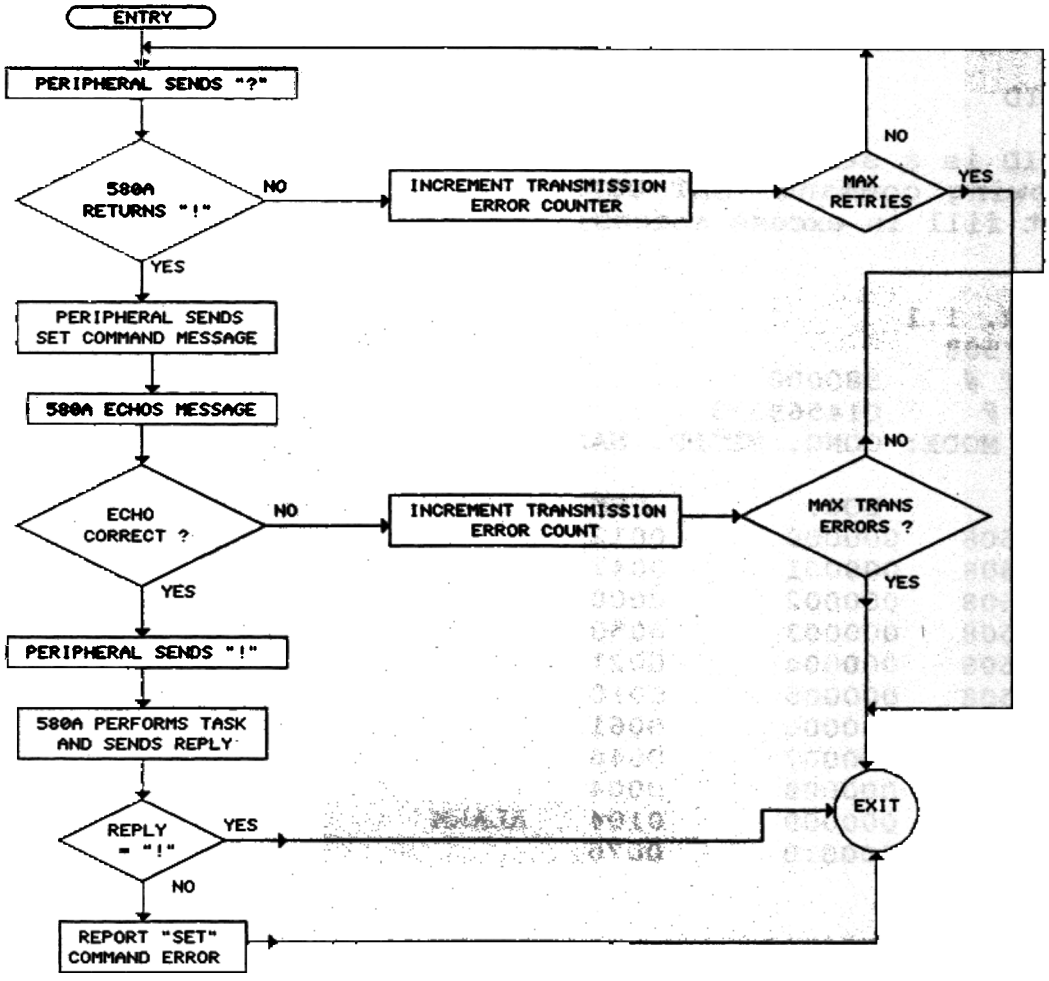

Figure A.4
Software Handshake
Set Commands

SET REAL TIME

The format for setting the real time is as follows:

```
II/II/II IIII
 .  .  .  . .
    .  .  . .........minutes (max=59)
    .  .  ..........hours (max=23)
    .  .............year
    ................day
    ................month
```

For example: SET REAL TIME 02/15/86 1723 (ret)
This instructs the 580B to set its real time clock to February 15, 1986 5:23 p.m.

SET USER ID

The user ID is a string of 9 integers. To set user ID = 66, use the following command "SET USER ID 000000066 (ret)" (leading zeros must fill in excess spaces).

```
580B   VER. 1.1
07/11/88 1508
INSTRUMENT #     580000
USER I.D. #      014569373
OPERATING MODE: CONC. METER, MAX HOLD

                  LOC.        PPM    STATUS
07/11/88 1508   000000       0012
07/11/88 1508   000001       0047
07/11/88 1508   000002       0000
07/11/88 1508   000003       0050
07/11/88 1508   000004       0021
07/11/88 1508   000005       0010
07/11/88 1509   000006       0061
07/11/88 1509   000007       0046
07/11/88 1509   000008       0004
07/11/88 1509   000009       0104   ALARM
07/11/88 1509   000010       0076

07/11/88 1509
INSTRUMENT #     580000
USER I.D. #      014569373
OPERATING MODE: CONC. METER

                  LOC.        PPM    STATUS
07/11/88 1509   000011       0000
07/11/88 1509   000012       0064
07/11/88 1509   000013       0052
07/11/88 1509   000014       0001
07/11/88 1509   000015       0007
07/11/88 1509   000016       0101   ALARM
```

Figure A.5
Data Log Output

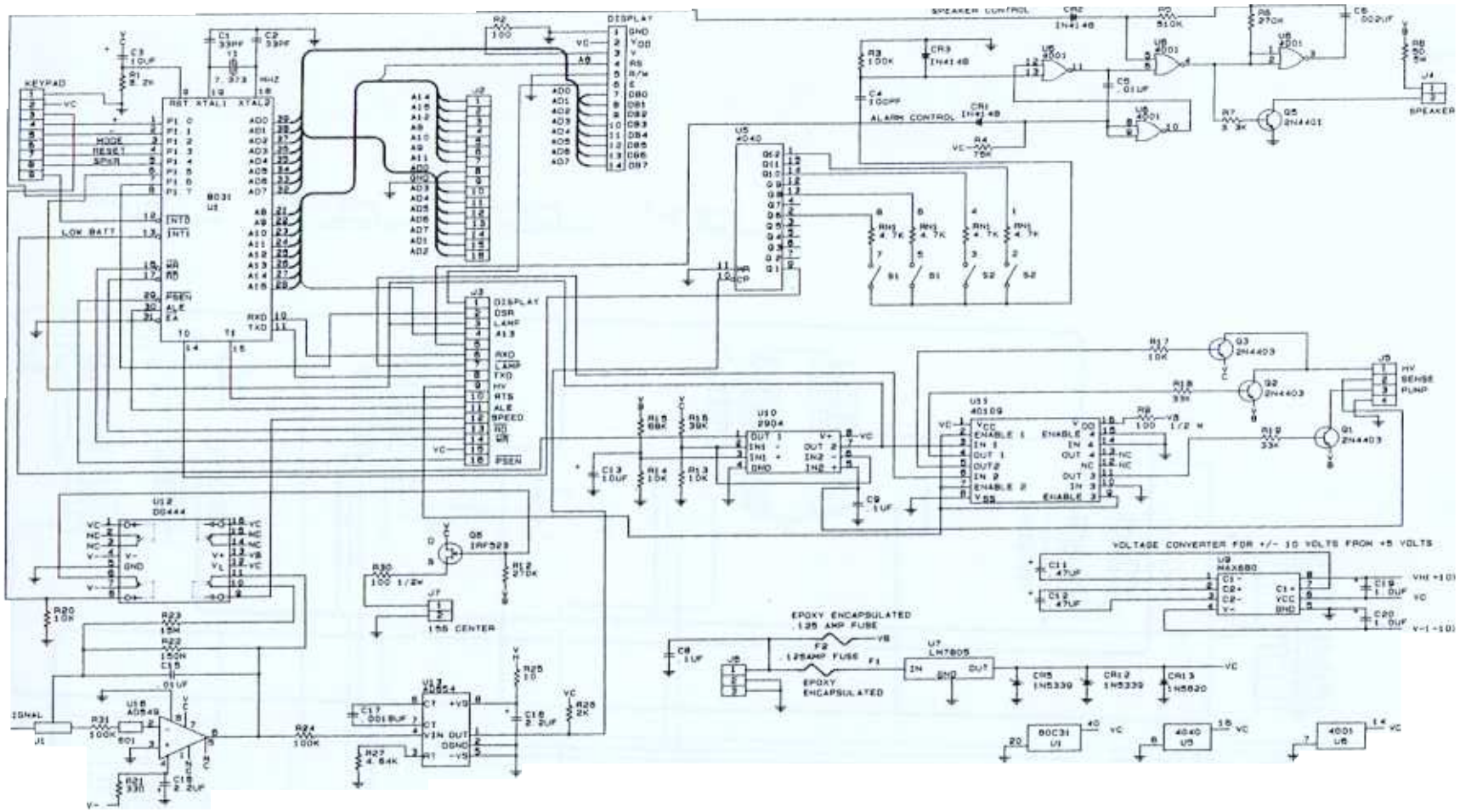

Figure B-1

Processor/Ranging Bd. Schematic

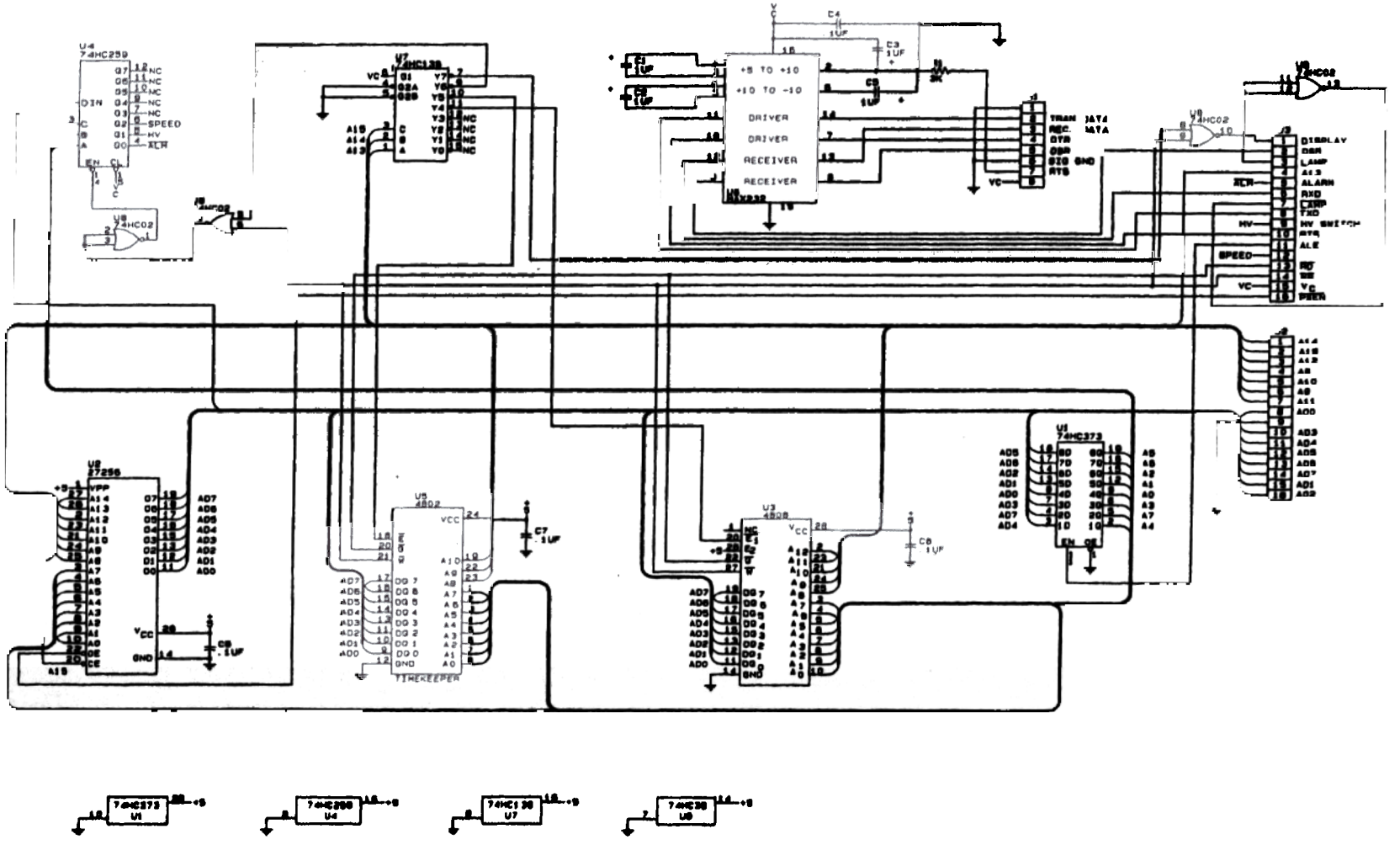

Figure B.2

Memory Board Schematic

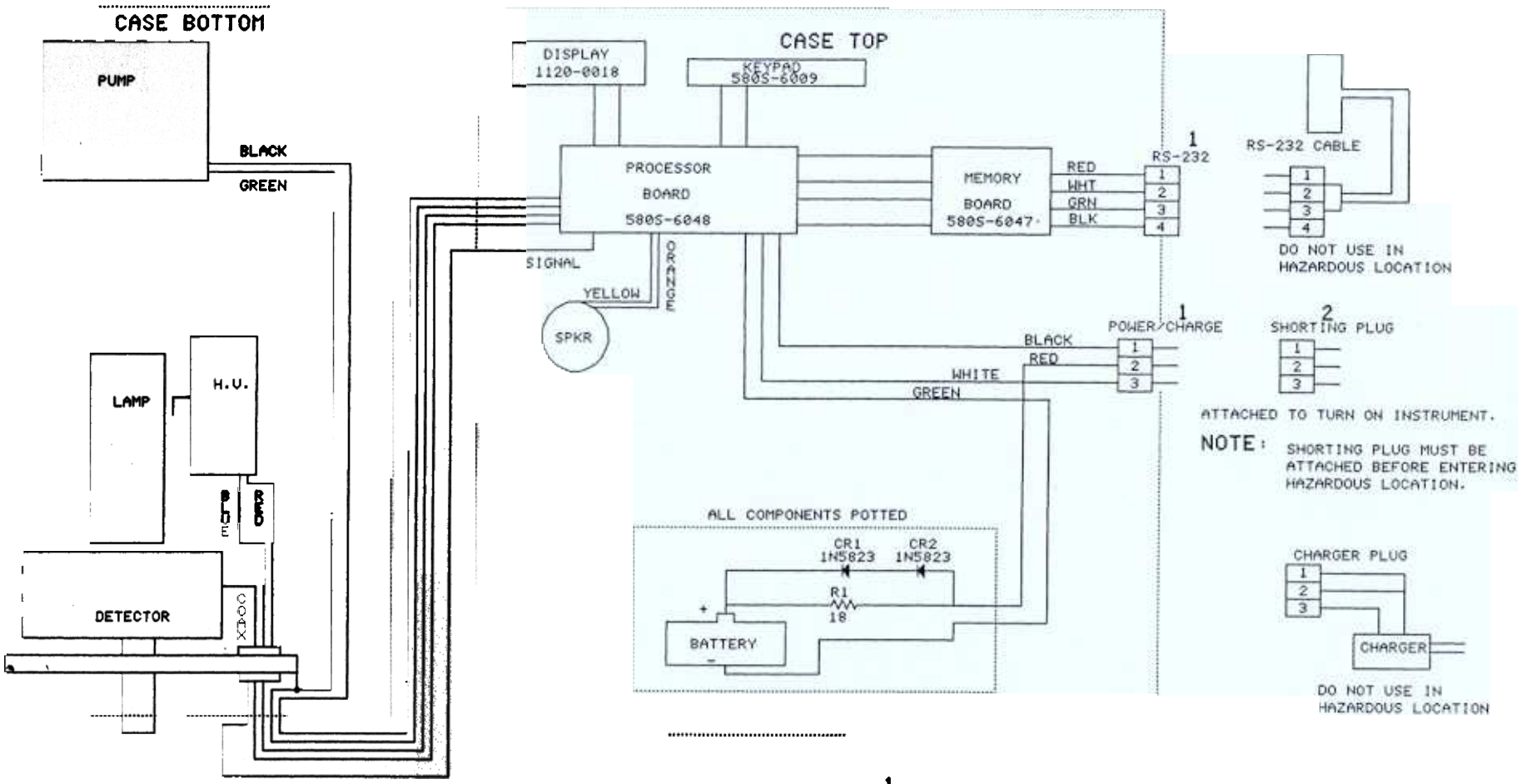

1 CONNECTORS MOUNTED ON REAR OF CASE TOP.

2 SHORTING PLUG IS TETHERED TO PREVENT ITS LOSS.

Figure C.1
Block Diagram

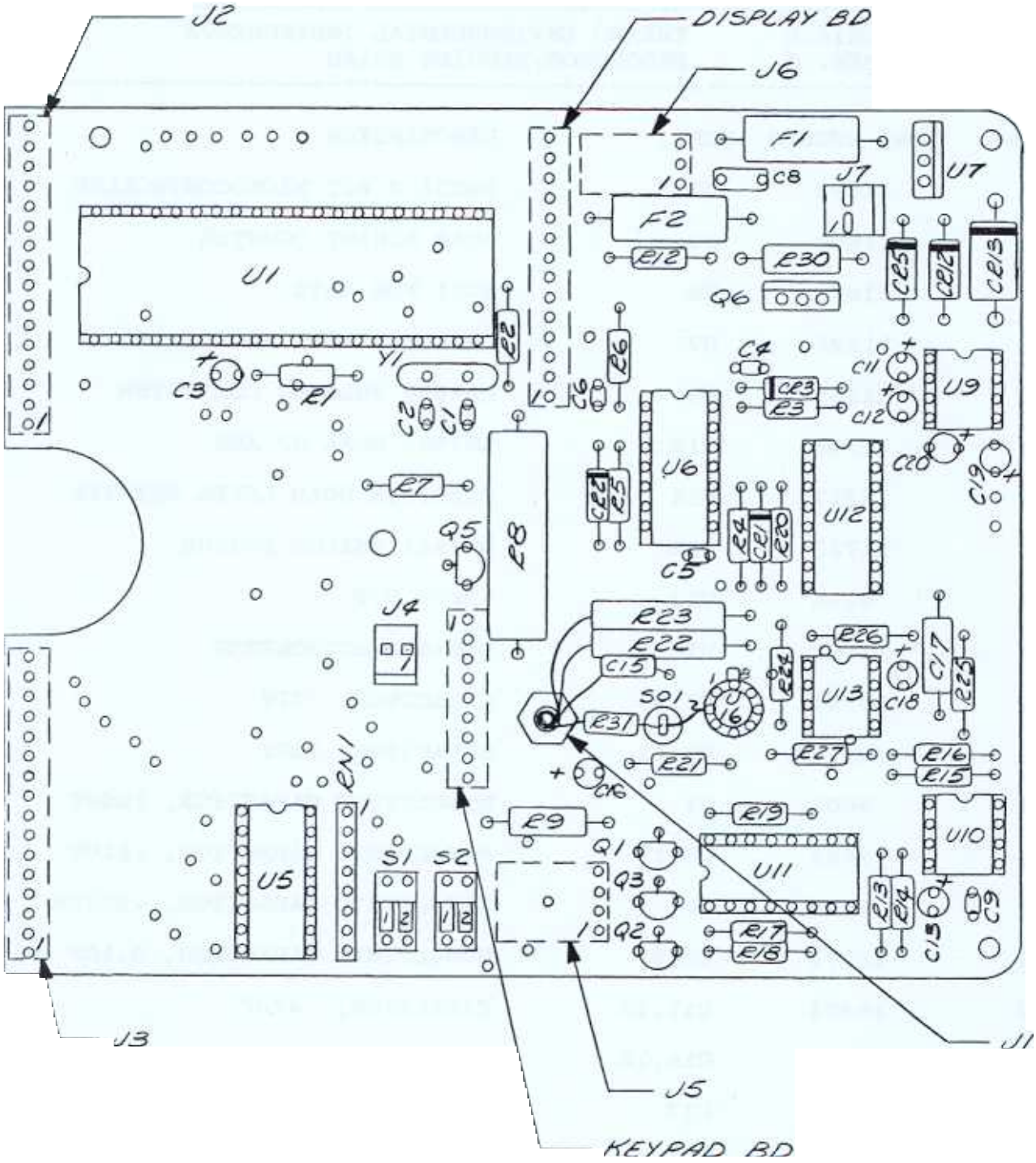

Figure D-1
Processor/Ranging Bd. Loading Drawing

BILL OF MATERIALS THERMO ENVIRONMENTAL INSTRUMENTS
580S-6048 REV. A PROCESSOR/RANGING BOARD

QUAN.	PART NUMBER	DESG.	DESCRIPTION
1	11695	U1	80C31 8 BIT MICROCONTROLLER
1	11696	U5	4040 BINARY COUNTER
1	11697	U6	4001 NOR GATE
1	11126	U7	LM7805 5 VOLT REGULATOR
1	11159	U9	MAX680 VOLTAGE CONVERTER
1	11716	U10	LM2904 DUAL OP AMP
1	11717	U11	CD40109B QUAD LEVEL SHIFTER
1	11723	U12	DG-444 ANALOG SWITCH
1	9296	U13	AD654 V/F
1	11152	U16	AD549 ELECTROMETER
2	10391	C1,2	CAPACITOR, 33PF
2	10376	C3,13	CAPACITOR, 10UF
1	5609	C4	MONOLITHIC CAPACITOR, 100PF
2	5605	C5,15	MONOLITHIC CAPACITOR, .01UF
1	10399	C6	MONOLITHIC CAPACITOR, .002UF
2	10372	C8,9	MONOLITHIC CAPACITOR, 0.1UF
2	10403	C11,12	CAPACITOR, .47UF
2	10390	C16,18	CAPACITOR, 2.2UF
1	10402	C17	POLYPROPYLENE CAP 1.8NF,5%
2	10378	C19,20	CAPACITOR, 1.0UF
1	10790	R1	RESISTOR, 8.2K
1	10847	R2	RESISTOR, 100, 1/4 W
3	10862	R3,24,31	RESISTOR, 100K
1	10928	R4	RESISTOR, 75K

BILL OF MATERIALS
580S-6048 REV. A

THERMO ENVIRONMENTAL INSTRUMENTS
PROCESSOR/RANGING BOARD

QUAN.	PART NUMBER	DESG.	DESCRIPTION
1	10929	R5	RESISTOR, 510K
2	10930	R6,12	RESISTOR, 270K
1	5986	R7	RESISTOR, 3,3K
1	10939	R8	RESISTOR, 50, 5W
2	10704	R9,30	RESISTOR, 100, 1/2W
4	10864	R13,14,17,20	RESISTOR, 10K
1	10938	R15	RESISTOR, 68K
1	6025	R16	RESISTOR, 39K
2	2219	R18,19	RESISTOR, 33K
1	10786	R21	RESISTOR, 330
1	10951	R22	RESISTOR, 150M, 5%
1	10952	R23	RESISTOR, 15M, 5%
1	10846	R25	RESISTOR, 10
1	10936	R26	RESISTOR, 2K
1	10865	R27	RESISTOR, 4.64K
1	11641	RN1	NETWORK, 4.7K X 6
3	11807	CR1-3	1N4148
2	11829	CR5,12	1N5339
1	11805	CR13	1N5820
1	10557	Y1	7.373 MHZ
1	10446	J1	RADIAL SMC
1	11398	J4	2 PIN AMP, .100 CENTER
1	11418	J5	4 PIN MTE

BILL OF MATERIALS THERMO ENVIRONMENTAL INSTRUMENTS
580S-6048 REV. A PROCESSOR/RANGING BOARD

QUAN.	PART NUMBER	DESG.	DESCRIPTION
1	11419	J6	3 PIN MTE
1	11405	J7	2 PIN AMP .156 CENTER
2	580S-6040	F1,2	.125 AMP FUSE ASSEMBLY
1	10422	S01	STANDOFF
2	12138	S1,2	SPST SWITCH, DUAL
3	11762	Q1-3	2N4403
1	11759	Q5	2N4401
1	11773	Q6	IRF523
1	580S-2057 REV. A		P.C. BOARD BLANK

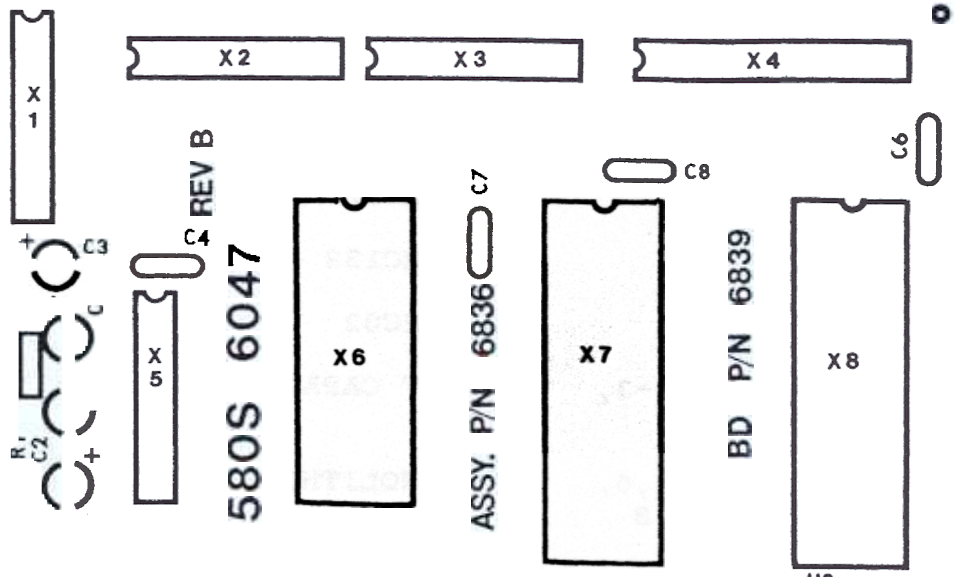

Figure D.2
Memory Board Loading Drawing

BILL OF MATERIALS THERMO ENVIRONMENTAL INSTRUMENTS
580S-6047 REV. A MEMORY BOARD

QUAN.	PART NUMBER	DESG.	DESCRIPTION
1	11689	U1	74HC373
1	11728	U2	27C256 8K EPROM
1	11687	U3	48Z08 8K X 8 BATTERY BACKED RAM
1	11688	U4	74HC259 OUTPUT PORT
1	11691	U5	48T02 2K X 8 TIMEKEEPER RAM
1	11685	U6	MAX232 RS-232 CHIP
1	11151	U7	74HC138
1	11730	U8	74HC02
4	10378	C1-3, 5	1UF CAPACITOR
4	10372	C4,6, 7,8	MONOLITHIC CAPACITOR, .1UF
1	10789	R1	RESISTOR, 3K
1	11374	X7	28 PIN SOCKET
1	580S-2056 REV. A		P.C. BOARD BLANK

MATERIAL LIST			
ITEM	PART NO.	DESCRIPTION	QTY
1	16801	CASE TOP	1
2	13675	SPEAKER ASSY.	1
3	13592	BATTERY ASSY.	1
4	13497	BATTERY HOLDER	1
5	13555	POWER HARNESS	1
6	5808-8029	RS-232 HARNESS ASSY.	1
7	11431	DUST COVER	1
8	16808	SHORTING PLUG	1
9	10460	KEYPAD	1
10	18538	P.C. BD SET UA	1
11	5868	8-32 X 1/4" LG. FLT. HD. MCH. SC	2
12	5815	4-40 X 5/16" LG. BND. HD. SC.	1
13	7534	NYLON WASHER	1
14	5856	8-32 X 1/2" LG. PAN. HD. SC.	2
15	12088	8-32 X 1" LG. FLAT HD. SC.	3
16	5822	8-32 X 5/8" LG. BND HD. SC.	2
17	6383	4-40 INSERT	1

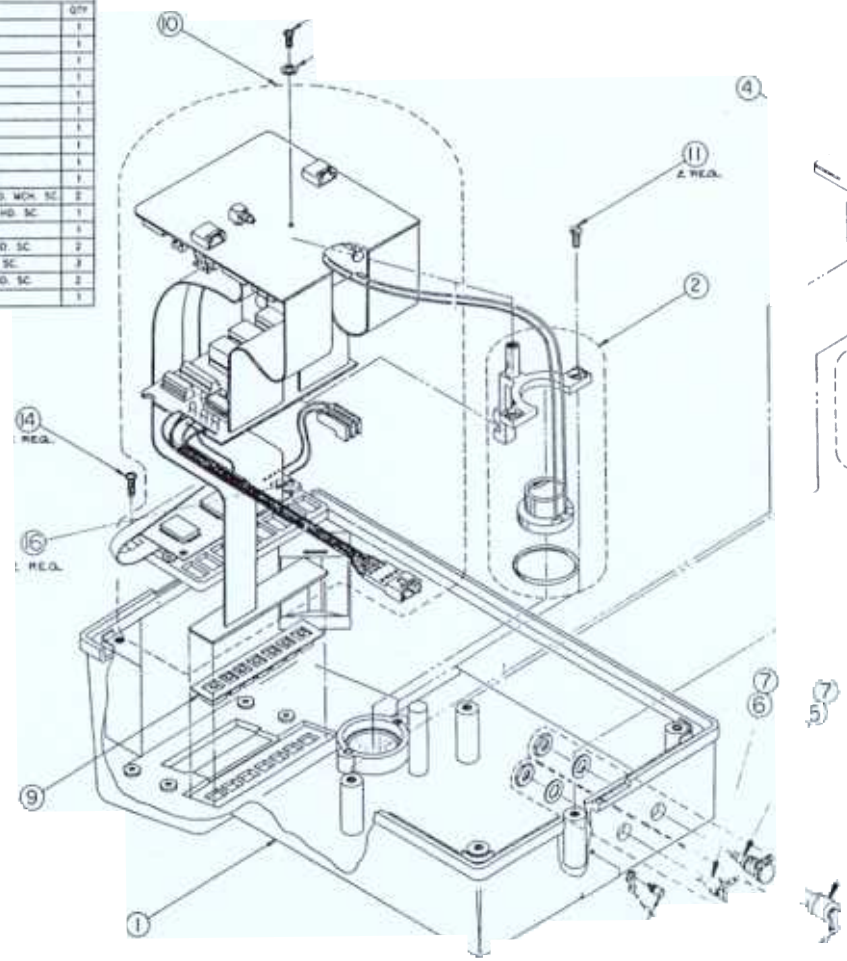

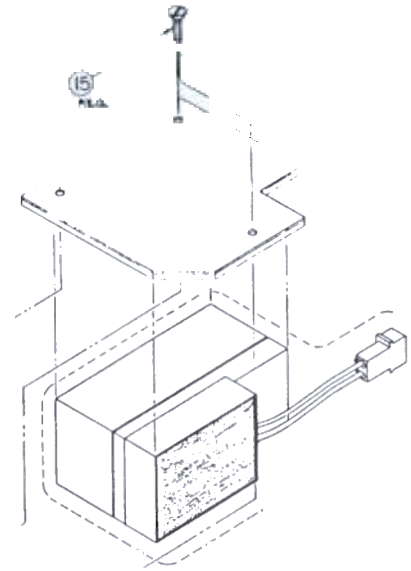

Figu
Top
emb.

APPENDIX F
COMMON ORGANIC SOLVENTS AND GASES DATA SHEET

CHEMICAL MATERIALS	F.W. (G/MOLE)	DENSITY (G/ML)	BP (°C)*	I.P. (EV)**	TWA (PPM)***
Acetaldehyde	44.05	0.788	21	10.21	
Acetamide	59.07	1.159	221	9.77	
Acetic Acid	60.05	1.049	116-117	10.37	10
Acetic Anhydride	102.1	1.10	138-117	9.88	5
Acetone	58.1	0.79	56	9.69	1000
Acetonitrile	41.1	0.79	82	12.22	40 cell
Acetophenone	120.15	1.033	202	9.27	
Acetyl Bromide	122.96	1.52	75-75	10.55	
Acetyl Chloride	78.50	1.104	52	11.02	
Acetylene	26.02	0.90		11.41	
Acrolein	56.06	0.8389	53	10.10	0.1
Acrylonitrile	53.06	0.8004	77	10.91	10
Allyl Alcohol	58.1	0.85	96-98	9.67	2
Allyl Chloride	76.5	0.94	44-46	9.9	1
Aniline	93.1	1.02	184	7.70	5
Anisole	108.13	0.9956	154	8.22	
Ammonia	17.03	gas		10.15	
Arsine	77.9	gas			
Benzaldelyde	106.12	1.053	178-185	9.53	
Benzene	78.1	0.88	80	9.25	1
Benzonitrile	103.12	1.010	188	9.71	
Benzotriflouride	146.11	1.1886	102	9.68	
Benzyl Chloride	126.6	1.10	177-181	9.14	1
Biphenyl	154.21	0.992	255		
Bromine	159.81	3.1023	58.8	10.55	
Bromobenzene	157.02	1.495	156	8.98	
1-Bromobutene	137.03	1.276	100-04	10.13	
2-Bromobutene	137.03	1.255	91	9.98	
1-Bromo-2-Chlorethene	143.42	1.723	106-07	10.63	
Bromochloromethane	129.39	1.991	68	10.77	
1-Bromo-2-Flourobenzene	175.01	1.593	150	8.99	
Bromoform	252.8	2.9	150-01	10.47	0.5
1-Bromo-2-methyl propane	137.03	1.260	90-92	10.09	
2-Bromo-2-methyl propane	137.03	1.189	72-74	9.89	
1-Bromopentane	151.05	1.218	130	10.10	
2-Bromopropane	123.00	1.354	71	10.18	
2-Bromopropene	123.00	1.310	59	10.08	
1-Bromopropene	120.98	1.413	58-63	9.30	
3-Bromopropene	120.98	1.398	70-71	9.70	
2-Bromothiophene	163.04	1.684	149-151	8.63	
M-Bromotoluene	171.04	1.4099	183.7	8.81	
O-Bromotoluene	171.04	1.431	58.60	8.79	
P-Bromotoluene	171.04	1.431	184	8.67	
1,3-Butadiene	54.1	gas	9.07		1000
Butane	58.12	gas	10.63		
	90.19	.842	9.14		

* BP - Boiling Point Degrees Centigrade
** IP - Ionization Potential
*** TWA - Time Weighted Average = Parts Per Million

CHEMICAL MATERIALS	F.W. (G/MOLE)	DENSITY (G/ML)	BP (°C)*	I.P. (EV)**	TWA (PPM)***
2-Butanone	72.1	0.81	80	9.53	200
1-Butene	56.10	0.6255		9.58	
N-Butyl Acetate	116.2	0.88	124-26	10.01	150
S-Butyl Acetate	116.2	0.88	111-12	9.91	150
N-Butyl Alcohol	74.1	0.81	117.7	10.04	100
N-Butyl Amine	73.1	0.73	73	78	5
S-Butyl Amine	73.1	0.73	63	8.70	5
T-Butyl Amine	73.1	0.73	46	8.64	5
N-Butyl Benzene	134.21	0.8604	183	8.69	
S-Butyl Benzene	134.21	0.8604	173-04	8.68	
T-Butyl Benzene	134.21	0.8669	169	8.68	
N-Butyraldehyde	72.10	0.8016	75	9.86	
N-Butyric Acid	88.10	0.959	162	10.16	
N-Butyronitrile	69.10	0.7954	115-17	11.67	
Camphor	152.2	0.99	204	8.76	2 mg/m
Carbon Dioxide	44.01	gas		13.79	5000
Carbon Monoxide	28.01	gas		14.01	50
Carbon Tetrachloride	153.8	1.59	77	11.47	10
Chlorine	70.90	gas		11.48	1 cell
Chlorobenzene	112.6	1.10	132	9.07	75
Chloroform	119.4	1.48	60.5-61.5	11.37	50 cell
1-Chloro-2-Methylpropane	92.57	.883	68-69	10.66	
2-Chloro-2-Methylpropane	101.64	.851	51-52	10.61	
1-Chloropropane	78.54	.892	46-47	10.82	
2-Chloropropane	78.54	.859	34-36	10.78	
3-Chloropropane	76.53	.939	44-46	10.04	
2-Chlorothiophene	118.59	1.286	127-29	8.68	
M-Chlorotoluene	126.58	1.076	160-162	8.83	
O-Chlorotoluene	126.58	1.0826	157-159	8.83	
P-Chlorotoluene	126.58	1.0697	162	8.70	
M-Cresol	108.1	1.034	203	8.52	5 cell
O-Cresol	108.1	1.048	191	8.50	5 cell
P-Cresol	108.1	1.034	202	8.38	5 cell
Crotonaldehyde	70.09	0.853	104	9.73	2
Cumene	120.2	0.86	152-154	8.75	50
Cyanogen	52.04	0.9537		13.80	
Cyclohexane	84.2	0.81	80.7-81	9.98	300
Cyclohexane	100.2	0.96	160-161	10.0	50
Cyclohexanone	98.1	0.95	155	9.14	50
Cyclohexene	82.1	0.81	83	8.95	300
Cyclo-Octatetraene	104.15	0.925	142-43	7.99	
Cyclopentane	70.13	0.7460	50	10.53	
Cyclopentanone	84.11	1.4366	130-131	9.26	
Cyclopentene	68.12	0.744	44	9.01	
Cyclopropane	42.08	gas		9.91	
Diborane	27.68	gas		11.00	
Diazomethane	42.0	gas		9.0	0.2

* BP - Boiling Point Degrees Centigrade
** IP - Ionization Potential
*** TWA - Time Weighted Average = Parts Per Million

CHEMICAL MATERIALS	F.W. (G/MOLE)	DENSITY (G/ML)	BP (°C)*	I.P. (EV)**	TWA (PPM)**
Dibromodiflouromethane	209.83	2.297	22-23	11.07	
1,2-Dibromoethane	187.87	2.180	131-32	9.45	
1,3-Dibromopropane	201.90	1.937	167	10.07	
Dibutylphthlate	278.3	1.04	340		5 mg/m
M-Dichlorobenzene	147.01	1.288	172-73	9.12	50
O-Dichlorobenzene	147.01	1.306	179-180	9.07	50
P-Dichlorobenzene	147.01	1.241	173	8.94	75
1,1-Dichlorethane	99.0	1.18	57	11.06	100
1,2-Dichlorethane	98.96	1.256	83	11.12	
1,2-Dichlorethylene	97.0	1.28	46-60	9.66	
Dichloromethane	84.93	1.325	39.8-40	11.35	
1,2-Dichloropropane	112.99	1.156	95-96	10.87	
1,3-Dichloropropane	112.99	1.190	120-22	10.85	
2,3-Dichloropropane	110.97	1.204	94	9.82	
N,N-Diethyl Acetamide	115.18	0.925	182-86	8.60	
Diethylamine	73.1	0.71	55	8.01	25
Diethyl Ether	74.12	0.7134	34.6	9.53	
N.N-Diethyl Formamide	101.15	0.908	176-77	8.89	
Diethyl Ketone	86.13	0.816	102	9.32	
Diethyl Sulfide	90.19	.837		8.43	
Diethyl Sulfite	138.19	1.883	158-60	9.68	
Dihydropyran	84.12	0.922	86	8.34	
Diisopropylamine	101.2	0.72	84	7.73	5
1,1-Dimethoxyethane	90.12	0.863	64	9.65	
N,N-Dimethyl Acetamide	87.12	0.937	164.5-66	8.81	10
Dimethyl Amine	45.1	0.68		8.24	10
N,N-Dimethyl Aniline	122.2	0.96	193-94	7.13	
2,2-Dimethyl Butane	86.18	0.649	50	10.06	
2,3-Dimethyl Butane	86.18	0.662	50	10.02	
3,3-Dimethyl Butanone	100.16	0.801	106	9.17	
N,N-Dimethyl Formamide	73.09	0.9445	153	9.12	10
Dimethlyl Sulfide	63.13	0.846	38	8.69	
P-Dioxane	88.1	1.03	100-102	9.13	
Dipropyl Amine	101.19	0.738	105-110	7.84	
Durene	134.12	0.84	80-82	8.03	
Epichlorohydrin	92.5	1.18	115-117		5
Ethane	30.07	gas		11.65	
Ethanethiol	62.13	0.8315	35	9.29	
Ethyl Acetate	88.1	0.90	76.5-77.5	10.11	400
Ethyl Alcohol	46.1	0.80	78	10.48	1000
Ethyl Amine	45.1	0.69	19.20	8.86	10
Ethyl Benzene	106.2	0.87	136	8.76	100
Ethyl Bromide	109.0	1.45	37-40	10.29	200
Ethyl Butyl Ketone	114.2	0.82	146-49	9.02	50
Ethyl Chloride	64.52	0.9214		10.98	1000
Ethyl Disulfide	122.25	0.993	153	8.27	
Ethylene Dibromide	187.9	2.17	131-132	10.52	20
Ethylene Dichloride	99.0	1.26	83	11.32	50

* BP - Boiling Point Degrees Centigrade
** IP - Ionization Potential
*** TWA - Time Weighted Average = Parts Per Million

CHEMICAL MATERIALS	F.W. (G/MOLE)	DENSITY (G/ML)	BP (°C)*	I.P. (EV)**	TWA (PPM)**
Ethyl Ether	74.1	0.73	34.6	9.59	400
Ethyl Formate	74.1	0.92	52-54	10.61	100
Ethyl Iodide	155.98	1.950	67-73	9.33	
Ethyl Isothiocyanate	87.15	1.003	60	9.14	
Ethyl Methyl Sulfide	76.16	0.842	66-67	8.55	
Ethyl Nitrate	75.07	0.90	112	11.22	
Ethyl Propionate	102.13	0.891	99	10.00	
Ethyl Thiocyanate	87.14	1.007		9.89	
Ethynylbenzene	102.13	0.9300	142-44	8.82	
Fluorine	37.99	gas		15.70	
Flourobenzene	96.10	1.024	85	9.20	
O-Fluorophenol	112.10	1.256	172-74	8.95	
M-Fluorotoluene	110.13	0.997	178	8.92	
O-Fluorotoluene	110.13	1.004	172-172	8.92	
P-Fluorotoluene	110.13	1.001	185	8.79	
Formaldehyde	30.03	1.083		10.87	3
Formahide	45.04	1.1334	210	10.25	
Formic Acid	46.02	1.220	110-101	11.05	
2-Furaldehyde	96.09	1.160	182	9.21	
Furan	68.07	0.9371		8.89	
Heptane	100.2	0.68	98	10.08	
2-Heptanone	114.18	0.8068	149-50	9.33	
Hexane	86.2	0.66	68-69	10.18	500
1-Hexane	84.16	0.673	64	9.46	
Hexone	100.2	0.80		9.53	
Hydrogen	2.017	gas		15.43	
Hydrogen Bromide	80.92	gas		11.62	3
Hydrogen Chloride	36.47	gas		12.74	5 cell
Hydrogen Cyanide	27.03	0.687		13.91	10
Hydrogen Flouride	20.01	gas		15.77	3
Hydrogen Iodide	127.93	gas		10.38	
Hydrogen Selenide	80.98	gas		9.88	0.05
Hydrogen Sulfide	34.08	gas		10.46	20 cell
Hydrogen Telluride	129.63	gas		9.14	
Iodine	253.81	4.93		9.28	0.1 cell
Iodobenzene	204.02	1.8384	188	8.73	
1-Iodobutene	184.02	1.617	130-31	9.21	
2-Iodobutene	184.02	1.4991	119-120	9.09	
1-Iodo-2-Methylpropane	184.02	1.599	120-21	9.18	
1-Iodopentane	198.05	1.517	154-55	9.19	
1-Iodopropane	169.99	1.743	101-02	9.26	
2-Iodopropane	169.99	1.703	88-90	9.17	
O-Iodotoluene	218.04	1.713	211	8.62	
M-Iodotoluene	218.04	1.698		8.61	
P-Odotoluene	218.04		211-5	8.50	
Isoamyl Acetate	130.2	0.88	142	9.94	
Isoamyl Alcohol	88.2	0.81	130-1	10.42	

* BP - Boiling Point Degrees Centigrade
** IP - Ionization Potential
*** TWA - Time Weighted Average = Parts Per Million

CHEMICAL MATERIALS	F.W. (G/MOLE)	DENSITY (G/ML)	BP (^{o}C)*	I.P. (EV)**	TWA (PPM)**
Isobutyl Amine	73.14	0.724	64-71	8.70	
Isobutyl Formate	102.13	0.885	98.4	10.46	
Isobutylene	56.11	0.5942	-6.9	9.23	
Isobutyraldehyde	72.11	0.794	63	9.74	
Isobutyric Acid	88.11	0.950	153-54	10.02	
Isoctane	114.2	0.70	98-99	17.9	
Isopentane	114.23	0.692	30	10.32	
Isoprene	68.12	0.681	34	8.85	
Isopropyl Acetate	102.1	0.87	85	9.99	250
Isopropyl Alcohol	60.1	0.79		10.16	400
Isopropyl Amine	59.1	0.69	33-34	8.72	5
Isopropyl Benzene	120.2	0.86	152-54	8.75	50
Isopropyl Ether	102.2	1.37	68-69	9.20	500
Isovaleraldehyde	86.13	0.785	90	9.71	
2,3-Lutidine	107.15	0.945	162-63	8.85	
2,4-Lutidine	107.15	0.927	159	8.85	
2,6-Lutidine	107.15	0.9252	143-45	8.85	
Malaic Anhydride	98.1	0.93	200	11.1	
Mesitylene	120.19	0.8637	162-64	8.40	
Mesityl Oxide	98.14	0.8592	129	9.08	
Methane	16.04	gas		12.98	
Methanethiol	48.11	0.96		9.44	
N-Methyl Acetamide	73.10	0.957	204-05	8.90	
Methyl Acetate	74.08	0.9279	57.5	10.27	
Methyl Acrylate	86.1	0.96	80	9.9	10
Methyl Amine	31.06	gas	48	8.97	
Methyl Bromide	95.0	gas		10.53	
2-Methyl-1-Butane	70.16	0.650	31	9.12	
3-Methyl-1-Butane	70.14	0.627	20	9.51	
3-Methyl-2-Butane	70.14	0.643		8.67	
Methyl Butyl Ketone	100.6	0.83	127	9.34	
Methyl Butyrate	102.13	0.898	102-103	10.07	
Methyl Chloride	50.5			11.28	
Methyl Cyclohexane	98.19	0.770	101	9.85	
Methyl Disulfide	94.20	1.046	109	8.46	
Methyl Ethyl Ketone	72.10	0.805	80	9.53	
Methyl Formate	60.1	1.34	34	10.815	100
2-Methyl Furan	82.10	0.827	63-66	8.39	
Methyl Iodide	142.0	2.28	41-43	9.54	5
Methyl Isobutyl Ketone	100.2	0.80	117-18	9.30	100
Methyl Isobutyrate	102.13	0.891	90	9.98	
Methyl Isopropyl Ketone	86.12	0.805	94-95	9.32	
Methyl Isothiocyanate	73.12		37-39	9.25	
Methyl Methacrylate	100.1	0.94	100	9.9	100
1-Methyl Napthalene	142.20	1.001	240-243	7.96	
2-Methyl Napthalene	142.20	1,000	241-242	7.96	
2-Methyl Pentane	86.18	0.653	62	10.12	
3-Methyl Pentane	86.18	0.664	64	10.08	
Methyl Propionate	88.11	0.915	79	10.15	

* BP - Boiling Point Degrees Centigrade
** IP - Ionization Potential
*** TWA - Time Weighted Average = Parts Per Million

CHEMICAL MATERIALS	F.W. (G/MOLE)	DENSITY (G/ML)	BP (°C)*	I.P. (EV)**	TWA (PPM)**
Methyl Propyl Ketone	86.13	0.809	100.01	9.38	
2-Methyl Styrene	165.4	1.068	131	10.07	
Monomethyl Aniline	107.16	0.989			
Monomethyl Hydrazine	46.1	0.87			
Morpholine	87.1	1.01	129	8.88	20
Nephthalene	93.7	1.16	217.7	8.12	10
Nitric Oxide	162.2	1.01		9.25	
P-Nitroaniline	138.1				1.0
Nitrobenzene	123.1	1.21	210-211	9.92	1.0
4-Nitrobiphenyl	199.2				
P-Nitrochlorobenzene	157.6	1.52		9.96	1.0 mg/m
Nitrogen Dioxide	46.01	1.448		9.78	
Nitroethane	75.1	1.38	112	10.81	100
Nitromethane	61.0	1.13	100.8-101	11.08	100
1-Nitropropane	89.1	0.99	131-32	10.88	25
2-Nitropropane	89.1	0.98	120	10.71	25
N-Nitrosodimethylamine	74.1	1.00	153	9.07	
Nitrotoluene	137.1	1.16	225-238	11.63	5
Oxygen	31.9988	gas		12.08	
Ozone	48.00	gas		12.08	
Pentaborane	63.17	0.61		10.40	
Pentane	72.15	0.62638	35	10.35	
2,4-Pentanedione	70.13	0.6429	140.4	8.87	
1-Pentene	70.13	0.6503	29.9-30.1	9.50	
Phenetol	122.16	0.967	169-70	8.13	
Phenol	94.1	1.07	182	8.50	5
Phenyl Hydrazine	108.1	1.1	238-41	7.86	5
Phenyl Isocyanate	119.12	1.0887	162-63	8.77	
Phenyl Isothiocyanate	135.18	1.1288	221	8.52	
Phosgene	98.9	gas		11.77	0.4 mg/m
Phosphine	34.0	gas			0.3
Phosphorous Pentachloride	208.2	1.6		10.7	1 mg/m
Phosphorous Trichloride	137.3	1.57	76	10.5	
2-Picoline	93.12	0.950	128-29	9.02	
3-Picoline	93.12	0.9613	144	9.02	
4-Picoline	93.12	0.9571	145	9.04	
Propane	44.09	gas		11.07	
1-Propanethiol	76.16	0.841	67-68	9.20	
Propiolactone	72.06	1.146	162	9.70	
Propionic Acid	74.08	0.99336	141	10.24	
Propionaldehyde	58.08	0.8071	46-50	9.98	
Propionitrile	55.08	0.7818	97	11.84	
N-Propyl Acetate	102.1	0.84	120	10.04	200
Propyl Alcohol	60.10	0.804	97	10.20	
Propyl Amine	59.11	0.719	48	8.78	
Propyl Benzene	120.20	0.862	159	8.72	
Propylene	42.08	gas		8.73	
Propylene Oxide	58.08	0.859	34	10.22	

* BP - Boiling Point Degrees Centigrade
** IP - Ionization Potential
*** TWA - Time Weighted Average = Parts Per Million

CHEMICAL MATERIALS	F.W. (G/MOLE)	DENSITY (G/ML)	BP (°C)*	I.P. (EV)**	TWA (PPM)***
Methyl Propyl Ketone	86.13	0.809	100.01	9.38	
2-Methyl Styrene	165.4	1.068	131	10.07	
Monomethyl Aniline	107.16	0.989			
Monomethyl Hydrazine	46.1	0.87			
Morpholine	87.1	1.01	129	8.88	20
Napthalene	93.7	1.16	217.7	8.12	10
Propyl Ether	102.17	0.7360	88.90	9.27	
Propyl Formate	88.10	0.901		10.54	
Pyrene	202.3	gas		7.41	
Pyridine	79.1	0.98	115	9.32	5
Pyrrole	67.09	0.9691	131	8.20	
Styrene	104.14	9.9059	145-146	8.47	
Styrene Oxide	120.2	1.054	194	9.04	
Tetrachloroethylene	165.9	1.63	121	9.32	100
Tetrahydrofuran	72.10	0.8892	67	9.54	
Tetrahydropyran	86.13	0.8814	88	9.26	
Thiophene	84.1	1.53	84	8.86	
Toluene	93.13	0.866	111	8.82	
O-Toluidine	107.2	1.01	199-200	7.44	5
Trichloroethene	131.40	1.4649	87	9.45	
Triethylamine	101.19	1.069	88.18	7.50	
Trimethyl Amine	59.11	0.636	3-4	7.82	
2,2,4-Trimethyl Pentane	114.23	0.692	98-99	9.86	
Tripropyl Amine	143.27	0.753	155-58	7.23	
Valeraldehyder	86.13	0.8095	103	9.82	
Valeric Acid	102.13	0.939	185	10.12	
Vinyl Acetate	118	0.94	72-73	9.19	10
Vinyl Bromide	106.96	1.517	16	9.80	
Vinyl Chloride	62.5	gas		10.00	1
Water	18.016	1.00	100	12.59	
M-Xylene	106.16	0.8684	138-39	8.56	100
O-Xylene	106.16	0.8801	143-45	8.56	100
P-Xylene	106.16	0.8614	138	8.45	100

* BP - Boiling Point Degrees Centigrade
** IP - Ionization Potential
*** TWA - Time Weighted Average = Parts Per Million

APPENDIX G

DILUTION PROBE OPERATION

(Not investigated as part of UL classified product)

G.1 GENERAL

The dilution probe is constructed of stainless steel and Teflon, with a charcoal filter mounted on the dilution inlet. The purpose of the charcoal filter is to provide hydrocarbon free air to the probe assembly so that the dilution of the incoming sample is not affected by the dilution air. The charcoal filter should be changed every 3 months to ensure proper operation, eliminating the problem of hydrocarbon breakthrough. It is easy to evaluate the performance of the charcoal, by challenging the Model 580A with hydrocarbon free air, then introducing a standard through the charcoal filter, with the inlet of the probe plugged. If there is breakthrough, a reading other than zero will be observed on the readout.

Another important part of the dilution probe is the 10 micron filter that is placed in the inlet of the probe assembly. The flow through this may reduce with time, as dirt collects on the inlet filter. This filter should be changed on a regular basis, depending upon the operator's experience and the environment in which he is working.

It is important to realize that the charcoal filter is not a totally efficient device. This does not cause a problem with the 580A, however, because the photoionization detector does not respond to ethane or methane.

TECHNICAL CONSIDERATION

Need For Dilution - The Model 580B dilution system was developed to increase the dynamic range of the Model 580A. As the instrument is manufactured, it has a workable range of 0 to 2,000 ppm. Above this upper limit, the detector is found to be non-linear. It does not absorb ethane or methane. The 580B will "lock out" for concentrations above 2,000 ppm. To meet the requirements of fugitive emission measurements as defined in EPA Method 21, there is the need to make measurements above the 2,000 ppm level. To accomplish this using a detector system that is limited by linearity, a dilution probe was developed. this probe provides a nominal 10 to 1 dilution ratio, increasing the dynamic range of the Model 580B from 2,000 to 20,000 ppm.

G.3 CALIBRATION OF THE DILUTION PROBE

The dilution probe is not factory calibrated. It has been tested and evaluated proper performance. It is the responsibility of the operator to properly calibrate the dilution probe.

The following is a simple procedure for this activity:

1. The performance of the 580B should have previously seen verified and calibrated.

2. Place the 580B in close proximity to a standard with the appropriate range. For example, if the instrument is to be used in a 5,000 ppm sampling range, then a standard of that concentration should be selected.

3. Connect the dilution probe making sure that the charcoal filter and the 10 micron filter are in place to the front of the 580B.

4. Challenge the instrument with the new standard gas and adjust the micro metering valve until a tenth of the reading is seen on the instrument readout.

5. As in the example of the 5,000 ppm standard, 500 ppm should be seen on the readout.

6. This is all that is required to calibrate the 580A or 580B.

   Note: It is important that both zero and span of of the 580A have been properly verified prior to initiating this procedure. It is very simple after using the dilution probe, to remove it and recheck the performance of the instrument on your low concentrator standard.

7. It should be noted that due to the environment that you are operating in, there may be a change in the back pressure of the charcoal filter and the 10 micron filter. Any changes in these over a period of time will cause a change in the split ratio of the dilution probe. Therefore, it is important to calibrate the dilution probe as regularly as you calibrate the 580A or 580B.

REPLACEMENT PARTS

1.	Inlet Probe Assembly	580A-6016
2.	Charcoal Filter	3150-0018
3.	Inlet Filter 10 Micron	3150-0017

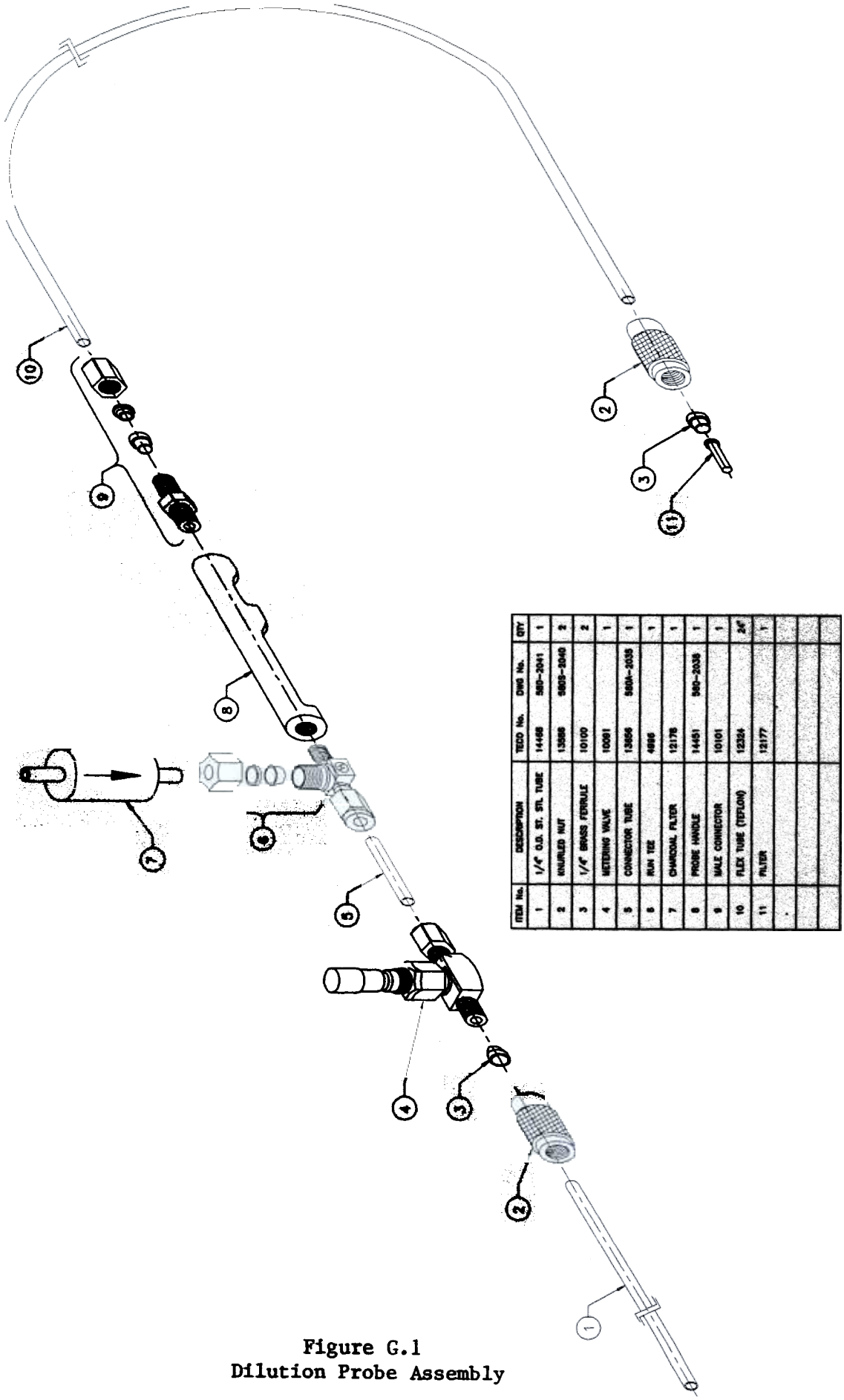

ITEM No.	DESCRIPTION	TECO No.	DWG No.	QTY
1	1/4" O.D. ST. STL TUBE	14468	500-2041	1
2	KNURLED NUT	13569	5609-2040	2
3	1/4" BRASS FERRULE	10100		2
4	METERING VALVE	10091		1
5	CONNECTOR TUBE	13656	5604-2035	1
6	RUN TEE	4686		1
7	CHARCOAL FILTER	12178		1
8	PROBE HANDLE	14451	500-2039	1
9	MALE CONNECTOR	10101		1
10	FLEX TUBE (TEFLON)	12324		24'
11	FILTER	12177		1

Figure G.1
Dilution Probe Assembly

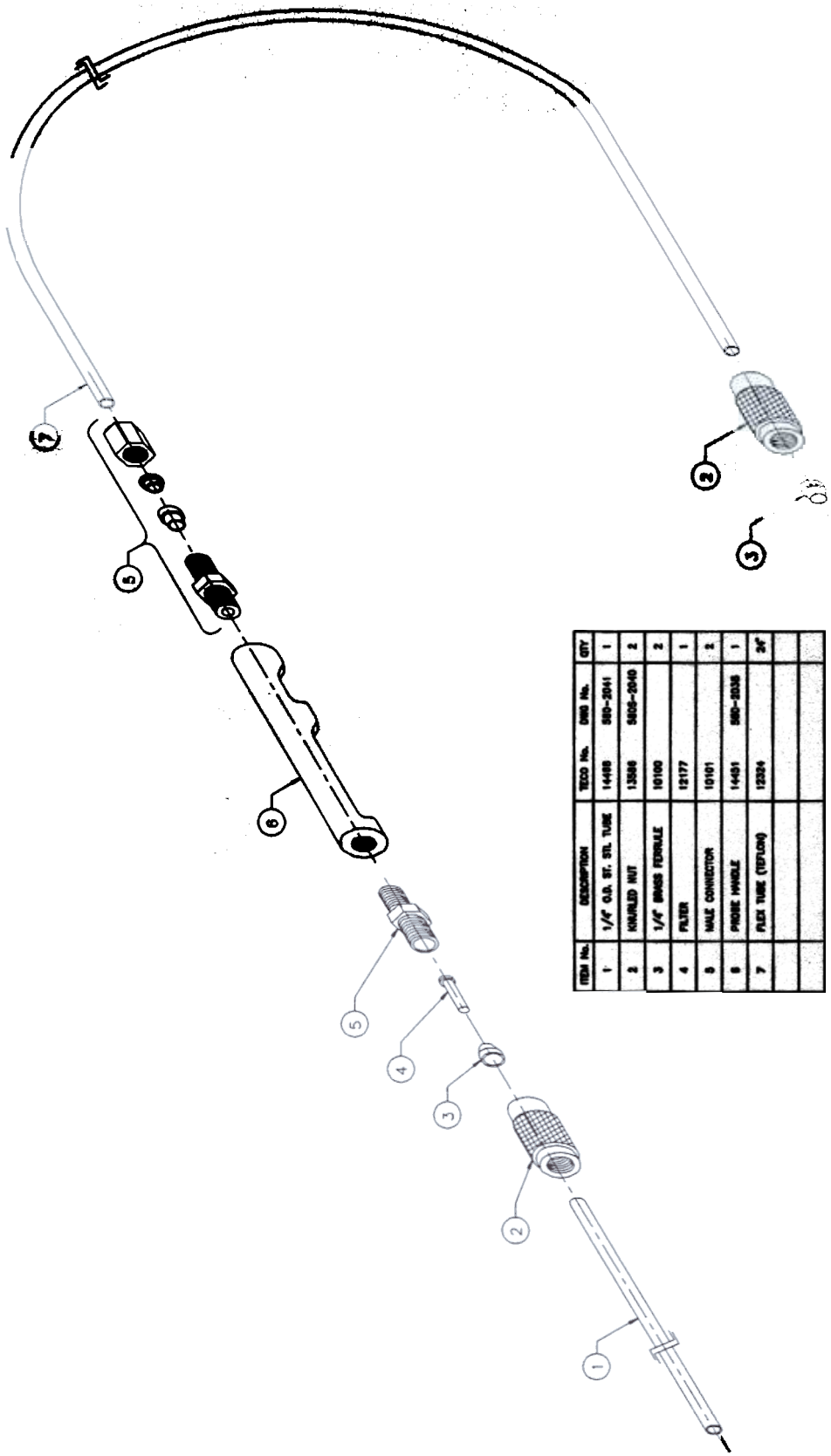

ITEM No.	DESCRIPTION	TECO No.	DWG No.	QTY
1	1/4" O.D. ST. STL TUBE	14499	SBD-2041	1
2	KNURLED NUT	13586	SBDS-2040	2
3	1/4" BRASS FERRULE	10100		2
4	FILTER	12177		1
5	MALE CONNECTOR	10101		2
6	PROBE HANDLE	14451	SBD-2036	1
7	FLEX TUBE (TEFLON)	12324		24"

Figure H.1
Probe Extension Assembly

APPENDIX I

INSTRUCTION SHEET
OPTION 11 WATER TRAP ASSEMBLY

(Not investigated as part of the UL classified product)

INSTALLATION

The water trap assembly (16846) is to be installed on the end of the 580 sample probe. The tygon tubing included is to be placed on the syringe side of the filter then connected to the probe. Refer to the drawing below.

USE

The water trap will effectively stop water from entering the instrument. Water traps can be re-used after drying at room temperature, but the user must be cautious of possible contamination. Contaminated traps should be discarded.

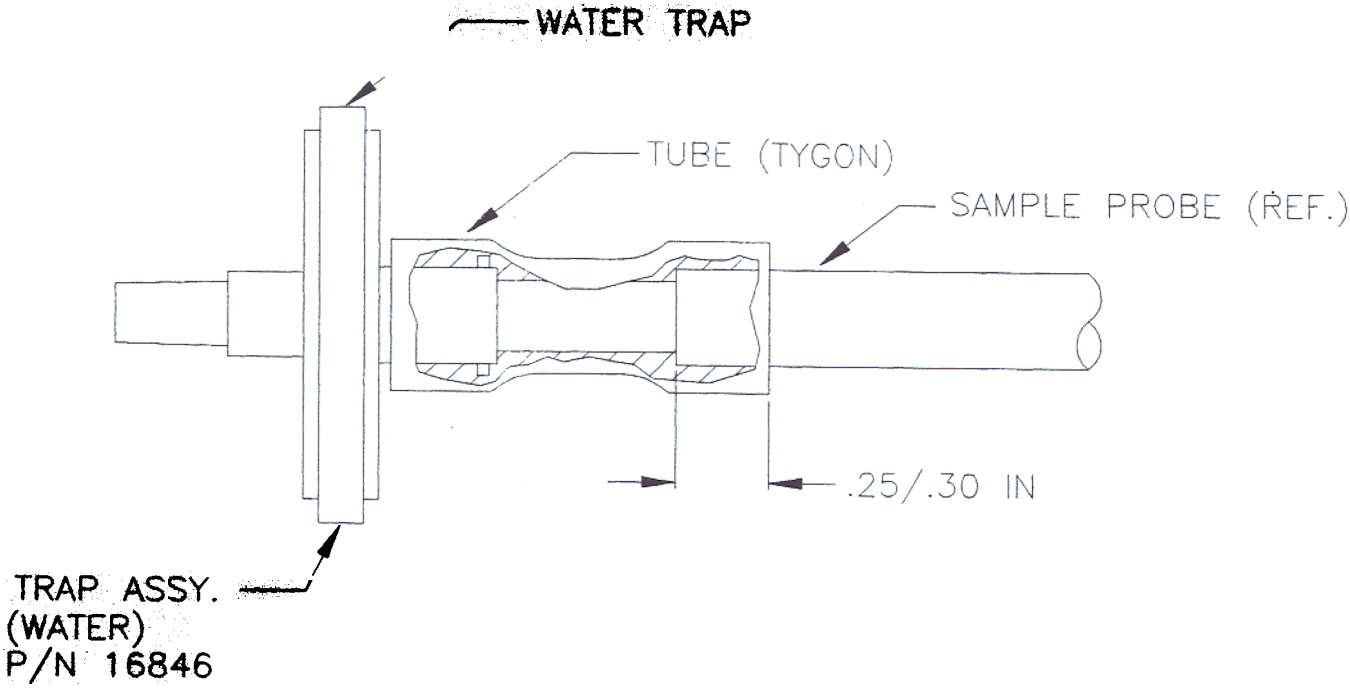

Figure I.1
Water Trap Assembly

APPENDIX J

Revised documents having an earlier revision level to the existing manual documents.

B-1	Processor Circuit	580S-9002	Sht. 1
B-2	Processor Circuit	580S-9002	Sht. 2
B-3	Memory Circuit	580S-9007	
C-1, 2, 3	Processor Board Bill of Materials	580S-6008	
	Processor Board Silkscreen	580S-6008	
	Memory Board Bill of Materials	580S-6007	
	Memory Board Silkscreen	580S-6007	

APPENDIX K

RS-232 Information Sheet

This procedure will retrieve logged data from Thermo Environmental Instruments' Model 580, and download the data into the HyperTerminal program for Windows 95 or Windows NT.

Hardware needed:

- Model 580
- Personal computer running either Win95 or WinNT with an available free serial communication port.
- RS-232 cable supplied with the Model 580

Software needed:

- HyperTerminal (supplied with Win95 and WinNT)

NOTE:
Even though this document uses HyperTerminal as the communication package, it is not necessary to use this program. HyperTerminal was chosen because it is part of the Win95 and WinNT software packages and is therefore readily available to users of these operating systems. Any communication program can be used to retrieve data from the Model 580 as long as it allows direct connections to a free communication port.

Procedure for setting up HyperTerminal for Win95 and WinNT

Click on the **HyperTerminal** folder within the **Programs/Accessories** folder in the start menu
Double Click on the icon called "HYPERTRM" or "HYPERTRM.EXE". This will execute the program and a dialog box called Connection Description should appear. In this dialog box it should say New Connection. In the edit box labeled **Name** enter *Model 580*. Then click **OK.**
Another dialog box called Phone Number should appear. The only edit box that needs to be changed is labeled **Connect Using.** From the list, selected by clicking on down arrow on the side of the edit box, pick from the *Direct to Comm* choices, the communications port you are planning to connect the Model 580 to. Then click **OK.**
A dialog box called Comm # Properties (# being the communications port you selected) should appear. These are the communications settings that should be set for communications with the Model 580.

Bits per second	9600	(Also called BAUD RATE)
Data bits	8	
Stop bits	1	
Flow Control	NONE	(Also called handshaking)

Once the above properties have been entered and set into the appropriate edit boxes, click **OK**
At this point you should have the main HyperTerminal program window on the screen. On the left side of the status bar which appears at the bottom of the screen, it should read "connected" with a timer counting up.
From the **FILE** menu select **SAVE**. This will save the properties you just entered for later use. The file will be named *Model 580* or *Model 580.ht* and can be used to start HyperTerminal by just double clicking on this file in the HyperTerminal folder.

Procedure for setting up Thermo Environmental Instruments' Model 580

To setup the Model 580 to communicate with the HyperTerminal or any other communications program see section 2.7.4 in the Manual. The Model 580 should be set to use *PRINTER FORMAT* with the baud rate set to *9600*. A basic understanding of the Model 580's menu system will be helpful.

To transfer data between HyperTerminal and the Model 580

HyperTerminal should be setup and the Model 580 should be set up and running. Before transferring the data, HyperTerminal or the communications program you are using should be set to capture the text being transmitted by the model 580.

To turn on the capture text feature in HyperTerminal

1 Select **CAPTURE TEXT** from the **TRANSFER** menu. A dialog box will appear asking for a file name to which the data will be written.
2. Enter the directory and filename in the edit box and then click **START**. The capture file is now open and ready to receive data.
3. Use the **BROWSE** button to open the appropriate file and directory into which you wish the captured data to be saved. Using the **BROWSE** feature only allows you to open an existing file and it will not let you create a new file.

Connect the communication cable between the selected communication port on the computer and the Model 580.
Once the Model 580 is setup and connected select Output Logged Data on the Model 580 and data should appear in the HyperTerminal Window. This is the logged data and even though it may scroll off screen all the data is being captured into the above capture file described above.
Once the data is transferred, close the capture text file. This is done in HyperTerminal by selecting **STOP** from the **TRANSFER/CAPTURE TEXT** menu.
This capture text file can now be printed using any text editor or imported into a spread sheet program for data analysis.

Thermo Environmental Instruments provides spare parts and servicing from the following locations:

Thermo Environmental Instruments Inc.
8 West Forge Parkway
Franklin, Massachusetts 02038
Telephone: (508) 520-0430
Facsimile: (508) 520-1460

Thermo Environmental Instruments Inc.
325 E. Arrow Hwy. #506
San Dimas, CA 91773
Telephone: (909) 394-2373
Facsimile: (909) 394-2367

Thermo Environmental Instruments has additional service personnel located throughout the country. Contact either service center for more information.

APPENDIX E
Kansas City District Data Quality Evaluation Guidance

KANSAS CITY DISTRICT DATA QUALITY EVALUATION GUIDANCE
August 18, 2003
Revised February 22, 2006

1 Introduction

This guidance, when used, is meant to be used according to the directions in the project's QAPP for evaluating the quality of the data and will be appended to the QAPP. The QAPP may use any part or none of this guidance as necessary to meet project demands. This is not a laboratory guidance and is not meant to interfere with the laboratory's compliance with the DOD QSM. It is to be used solely by data quality evaluators, reviewers, and usability assessors. This guidance is meant to serve as an initial base from which to build a data quality evaluation program on data generated from a project. When used, it is understood that deviations from the written guidance will sometimes be necessary. It is expected that these deviations will be listed and the deviation(s) justified in writing.

When data fails to conform to the requirements stated in the QAPP (e.g., failure to perform corrective actions), the data stands the risk of being rejected by the data evaluator.

2 Evaluation Procedure

Data quality will be determined by the evaluation of the minimum following items:

- holding times
- method detection limits
- blanks
- laboratory control samples
- matrix spikes/matrix spike duplicates
- matrix duplicates/precision
- surrogate recoveries
- second column confirmation
- internal standards (optional)

2.1 Holding Times

1. In general, exceedence of holding times will be qualified as shown:
   a. If no evidence samples were properly preserved for volatiles, exceedence of a 7-day holding time results in "R".
   b. If samples were properly preserved for volatiles, exceedence of a 14-day holding time results in "R".
   c. For semi-volatile compounds and anions, exceedence of holding time results in "R" qualified data.

2. Deviations to the above must be justified in writing. If comparison with historical data is considered, it must be considered along with other criteria, i.e., historical data comparison will not be the primary reason for acceptance of data (no qualifier).

3. Corrective actions taken after holding time exceedence. Corrective actions that take place after 11/2 times the holding time will be rejected (R). If laboratory routinely corrects after holding time, data will be rejected. Exceptions to this will be justified in writing.

2.2 Method Detection Limits

1. Result falling below either the MDL or the MRL will be U-qualified.
2. Results falling between the MDL/MRL and the PQL will be J-qualified.
3. Unless adequately addressed in the QAPP, data recorded as non-detect will be rejected if detection limit is above the action level (AL).

2.3 Blanks

1. Missing blank and no hierarchy[1] blank available, the following is recommended:
   a. Low positive result of each specific analyte will be U-qualified. Low positive result is defined as any positive number less than 5 times the maximum blank contamination of that analyte found in any blank from any other batch in the dataset.
   b. Medium positive result will be estimated (J). Medium positive result will be any result between the low positive result defined above and 10 times that result.
   c. High positive result will be unqualified.

2. Samples associated with contaminated blanks will be reported with the analytical result followed by "U" when the analytical result is less than 5 times the blank contamination for uncommon lab contaminants or less than 10 times the blanks contamination for common lab contaminants.

2.4 Laboratory Control Samples

1. Missing LCS. Laboratory will be contacted for missing LCS. Otherwise, data will be rejected.
2. For specific chemicals of concern, LCS recoveries must be within criteria. If not, a corrective action must bring them into criteria. If this fails, the following qualifier assignment applies:
   a. For purge-and-trap, recoveries outside lab criteria but within 40-160% or 4σ, whichever results in the wider range, result in J-coding the analyte(s) in all samples in the batch. If outside 40-160% or 4σ, data is R-coded.
   b. For inorganic analyses, recoveries outside lab criteria but within 60-140% or 4σ, whichever results in the wider range, result in J-coding the analyte(s) in all samples in the batch. If outside the 60-140% or 4σ, data is R-coded.
   c. For semivolatiles, recoveries outside lab criteria but within 60-140% or 4σ, whichever results in the wider range, result in J-coding the analyte(s) in all samples in the batch. If outside the 60-140% or 4σ, data is R-coded.

[1] A hierarchy blank is a blank that is used to evaluate contamination resulting from processes preceding and including the subject missing blank. That is, either an equipment blank or trip blank may be used as a hierarchy blank to the method blank.

3. Marginal exceedences[2] will apply to all other chemicals. Chemicals that fail in this category will be rejected. Acceptable recovery ranges for marginal exceedences are listed in item 2 above.
4. When action levels (AL) have been listed, sample results that are greater than 10-fold higher than the AL will be unqualified regardless of the magnitude of the LCS failure. Samples whose results are less than 10-fold different (high or low) will be qualified according to the criteria listed under **Matrix Spikes/Matrix Spike Duplicates.**

2.5 Matrix Spikes/Matrix Spike Duplicates

Paragraphs 3 through 5 evaluate whether it can be determined by the analytical result if the actual concentration of the analyte of concern is above or below the action level (AL). If the analytical result is too close to the action level to make such a determination, the result is rejected as being unusable. Paragraphs 3 through 5 allows the data evaluator to make this determination. Note that these calculations are not needed if it is clear that the analytical result is far removed from the AL.

1. All matrix spikes outside acceptance criteria will be J-coded as a minimum.
2. Qualification will be based on the most significant failure in the MS and MSD pair.
3. For MS recoveries <100%, the analytical result is rejected if the analytical result falls at or below the action level (AL) or at or above the number calculated from $\frac{(R)(AL)(200-RPD)}{100(200+RPD)}$, or AL $\geq$ sample result $\geq \frac{(R)(AL)(200-RPD)}{100(200+RPD)}$.

   Where

   AL = Action Level
   R = Percent Recovery
   RPD = Relative Percent Difference

   For example, if MS recovery (*R)* of chrysene is 75%, its RPD is 20% and its AL = 10 ppb, then data that is equal to or greater than 6.13 ppb or equal to or less than 10 ppb is rejected[3]. If MS recoveries are not available for any specific COC, use LCS.
4. For MS recoveries >100%, the analytical result is rejected if the analytical result falls at or above the action level (AL) or at or below the number calculated from $\frac{(R)(AL)(200+RPD)}{100(200-RPD)}$, or AL $\leq$ sample results $\leq \frac{(R)(AL)(200+RPD)}{100(200-RPD)}$.
5. If the recovery of one member of the MS-MSD pair is <100% and the recovery of the other member is >100%, then sample result is rejected if $\frac{(R_1)(AL)(200-RPD)}{100(200+RPD)} \leq$ sample result

[2] A marginal exceedence is defined as being beyond the LCS control limit (3 standard deviations) but within the exceedence limit (4 standard deviations). The number of chemicals permitted to have MEs depend on the total number of chemicals in the LCS. This number may be found in the DoD QSM, DoD Appendix D, Section D2, page 180.
[3] The formula presented is calculating a concentration that is below the AL by the same amount as the percent MS recovery with an additional lowering considering the analytical variability (expressed as RPD).

$\leq \frac{(R_2)(AL)(200+RPD)}{100(200-RPD)}$ with R_1 and R_2 the recoveries under 100% and over 100%, respectively.

6. Sample results not falling into the above ranges will be rejected if the MS or MSD fails and the LCS recovery falls outside the recoveries mentioned under **Laboratory Control Samples,** item 2.

2.6 Matrix Duplicates/Precision

a. Refer to **Matrix Spikes/Matrix Spike Duplicates** which may be used to cover precision.

b. All other RPDs outside acceptance criteria will be J-coded.

2.7 Surrogate Recoveries

1. If the surrogate is marginally out and the LCS/blanks surrogate is also out, qualify detects of the chemicals considered associated with the non-compliant surrogate (i.e., chemicals with similar RTs and similar structure as surrogate) with “J” and non-detects with “UJ”.
2. If the surrogate is marginally out in the sample and the surrogate in the LCS or blank is in, this should be considered a matrix effect. Qualify chemicals most closely associated with the surrogate(s) with “J”.
3. If the surrogate is grossly outside of 60-140% for purge-and-trap and 20-180% for extractable organics, whether the LCS/blanks surrogates are in or out, a corrective action should have been completed. In the absence of a corrective action, qualify non-detects with “R” and detects with “J”.
4. No qualification if surrogates are out due to a chromatographic problem.
5. No qualification if surrogates are diluted out.
6. Where multiple surrogates are present, if one or more grossly fail, the data is qualified on the most non-compliant surrogate.

2.8 Second Column Confirmation

1. What constitutes acceptable agreement between two columns will be issued by the laboratory.
2. In the case of a peak appearing on primary column, but confirmation not run, the following will apply:
    a. For long term monitoring where the identity of the contamination is known for each well, lack of confirmation will result in a “J” qualifier. If information is critical, a footnote will be given that the location should be resampled;
    b. For areas that have been previously well characterized, and past chromatograms have shown no interferences around the chemicals of concern, lack of confirmation may go unqualified. This basically covers remedial actions; and

c. For areas where contamination is questionable, lack of confirmation will result in a rejection (R) of the data with a footnote that the sampled area requires reinvestigation.

c. When confirmation was attempted, but interferences obscured the peak on the confirmation column, the result would be reported from the column that did not contain interferences and J-qualified. Surrogate recoveries will also be reported from that column.

d. When the RPD between the primary column peak and the secondary column peak is greater than 40%, the quantitation is taken from the smaller peak and J-qualified.

2.9 Internal Standards

1. The internal standard (IS) peak area of the CCV is the standard, acceptable peak area. The IS peak area of samples should be -50% to +100% of this area. IS areas falling outside this range will be qualified according to the following:

    a. For high IS areas in samples which will be greater than 2 times the standard area but less than 5 times the standard area should result in “UJ” for non-detects and “J” for detects.

    b. For IS areas greater than 5 times the standard area, a corrective action would be required. In the absence of a corrective action, any result less than the AL will be rejected. All other results will be J-coded.

    c. For IS areas less than 1/2 the standard area but greater than 1/5 the standard area, positive results will be J-coded.

    d. For IS areas less than 1/5 the standard area in either a matrix spiked sample or the LCS, the matrix spike or LCS recovery respectively will be used to determine any negative impact on the results. For low IS areas found in other samples, the surrogate recoveries will be used for the evaluation. If impacted and the sample result is greater than the AL, the result will be rejected. Result also rejected if not-detected. All other results will be either R or J-coded.