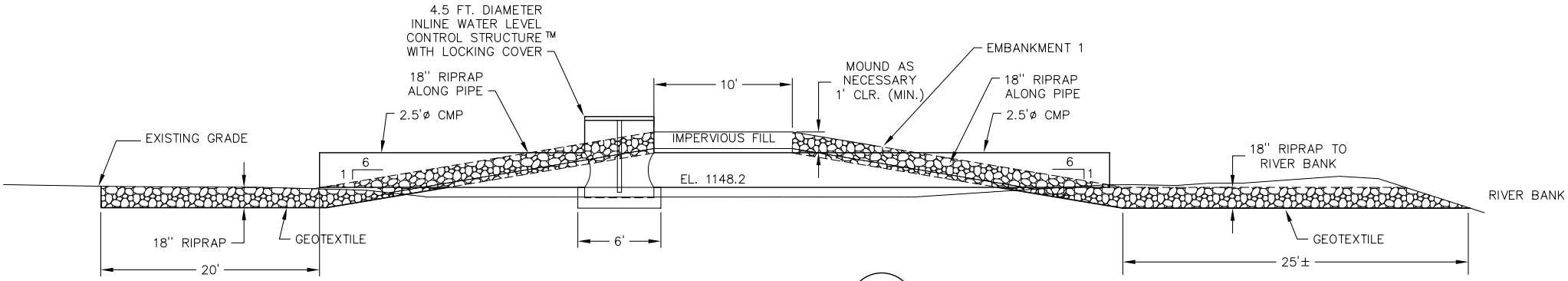

SECTION A

CMP WATER CONTROL STRUCTURE A