CHAPTER 10

Responses to Comments on the Draft EIS

10.1 INTRODUCTION

This chapter summarizes and responds to all substantive verbal and written comments received from government agencies and the public during the comment period on the Draft EIS. Table 10.1-1 identifies the organizations, groups, and individuals who commented on the project. The public notification process for publication of the Draft EIS and public meetings is described, along with a summary of the opportunity provided for the public to submit comments. The remainder of the chapter provides a summary of comments received and responses to each substantial comment made on the Draft EIS.

The comments submitted, and the corresponding responses, are presented in the Comment-Response Matrix in Section 10.3. The comments and responses are arranged by subject area following, the organization of this EIS; the commenter is identified for each comment. Where multiple comments were made on the same subject matter, a single comment summarizes the essence of the individual comments. For statements that did not require a response and for comments that did not relate to the analysis of the Project as presented in the Draft EIS, the response “Comment noted” is provided.

10.2 THE DRAFT EIS COMMENT PERIOD

The Notice of Availability for the Missouri River Commercial Dredging Draft EIS was published in the Federal Register on July 23, 2010 (75 FR 43160). The 45-day comment period ended on September 6, 2010. One public meeting was held on August 26, 2010, in Jefferson City, Missouri.

A court reporter was provided at the meeting to allow meeting attendees to submit oral comments. In addition, agencies, organizations, and interested parties provided written comments on the Draft EIS.

At the close of the comment period, 84 individual letters had been received from governmental agencies, organizations, and the general public. A copy of each letter with the individual comments highlighted is included in Appendix F to the FEIS.

Table 10.2-1 List of Commenters on the Draft EIS

Letter ID	Date	Name	Organization	Location
1	9/2/2010	Hon. Blaine Luetkemeyer, Hon. Roy Blunt, Hon. Russ Carnahan, Hon. Todd Akin, Hon. Sam Graves, Hon. Jo Ann Emerson, Hon. Lynn Jenkins	U.S. Congress	Washington, DC
2	9/2/2010	Hon. Kurt Schaefer	Missouri Senate	Jefferson City, MO
3	9/7/2010	Karl Brooks	U.S. Environmental Protection Agency, Region VII	Kansas City, KS
4	9/2/2010	Robert F. Stewart	U.S. Department of the Interior	Denver, CO
5	9/3/2010	Kevin Keith	Missouri Department of Transportation	Jefferson City, MO
6	9/3/2010	Kip A. Stetzler	Missouri Department of Natural Resources	---
7	9/7/2010	Doyle Brown	Missouri Department of Conservation	Jefferson City, MO
8	9/7/2010	David Bender	Kansas Department of Wildlife and Parks	Pratt, KS
9	9/7/2010	Tracy Streeter	Kansas Water Office	Topeka, KS
10	8/4/2010	Patrick Zollner	Kansas State Historic Preservation Office	Topeka, KS
11	9/2/2010	Charles W. Korman, Rich Danniels, John Noltensmeyer	Montgomery County Commission	Montgomery City, MO
12	9/1/2010	Larry Miskel	Mayor of Hermann, Missouri	Hermann, MO
13	9/7/2010	Curtis B. Skouby	City of St. Louis, Department of Public Utilities – Water Division	Saint Louis, MO
14	8/12/2010	Sandy Lucy	Mayor of Washington, Missouri	Washington, MO
15	9/3/2010	Karen Kelley	City of Independence, Missouri Water Department	Independence, MO
16	9/2/2010	Charles Kruse	Missouri Farm Bureau Federation	Jefferson City, MO
17	9/3/2010	Randy Asbury	Coalition to Protect the Missouri River	Higbee, MO
19	9/28/2010	Douglas Baker	Missouri Sand Company	Lawrence, KS
20	9/3/2010	William G. McCaffree	McCaffree & Landoll	Nevada, MO
21	8/31/2010	David Yates	Missouri Asphalt Pavement Association	Jefferson City, MO
22	9/3/2010	Jay Schultehenrich	SITE Improvement Association	St. Louis, MO
23	8/30/2010	Dara Page Genny	Cedar Knoll Farm	Berger, MO
24	9/3/2010	Allan Hasenjaeger	Hasenjaeger Trucking, Inc.	Marthasville, MO

Table 10.2-1 List of Commenters on the Draft EIS

Letter ID	Date	Name	Organization	Location
25	9/1/2010	Lulu Hasenjaeger	Hasenjaeger Trucking, Inc.	Marthasville, MO
26	9/3/2010	Darrell Hasenjaeger	Hasenjaeger Trucking, Inc.	Marthasville, MO
27	9/2/2010	David J. Peters	David J. Peters Trucking, Inc.	Marthasville, MO
28	9/7/2010 (rec'd)	Ren Potterfield	Ren Potterfield Trucking, Inc.	Monroe City, MO
29	9/7/2010 (rec'd)	Ronald J. Rowland	Utility Trailer Sales of Kansas City, Inc.	Kansas City, KS
30	8/30/2010	Michael Armstrong	Water District No. 1 of Johnson County, Kansas (WaterOne)	Lenexa, KS
31	8/31/2010	Steve J. Schleicher	U.S. Water Company	Lexington, MO
32	9/7/2010	Tom Schrempp	Missouri River Public Water Supplies Association	Johnson County, KS
33	9/6/2010	Tom Waters	Missouri Levee and Drainage District Association	Orrick, MO
34	8/28/2010	Frank Kartmann	Missouri American Water Company	St. Louis, MO
35	9/6/2010	Bart Korman	Lewis-Bade, Inc.	Warrenton, MO
36	9/2/2010	Rodger Kaminska	International Union of Operating Engineers Local No. 101	Kansas City, MO
37	8/31/2010	Vickie Muldoon	Home Builders Association of Central Missouri	---
38	9/3/2010	Joe Hoette	Hoette Concrete Construction	Hazelwood, MO
39	9/1/2010	Steven W. Engemann	Hermann Sand & Gravel, Inc.	---
40	8/30/2010	Douglas L. Smith	Associated General Contractors of Missouri, Inc.	Jefferson City, MO
41	8/31/2010	Glen Robertson	Emery Sapp & Sons, Inc.	Kansas City, MO
42		Brian Osborne	Knapheide Equipment Company	Quincy, IL
43	9/7/2010	David Shorr	Lathrop & Gage	Jefferson City, MO
44	9/6/2010	Michael R. Odell	Holliday Sand and Gravel Company	Lenexa, KS
45	9/2/2010	Randy Scherr	Missouri Concrete Association, Inc.	Jefferson City, MO
46	9/7/2010	F. Ray Bohlken	Capital Sand Company, Inc.	Jefferson City, MO
47	9/3/2010	Mike and Christine Novak	---	---
48	9/3/2010	Jean Held	---	Hermann, MO
49	9/7/2010 (rec'd)	Dale A. Gloe	---	---
50	9/1/2010	Robb Jacobson	U.S. Geological Survey (unofficial comments)	---

Table 10.2-1 List of Commenters on the Draft EIS

Letter ID	Date	Name	Organization	Location
51	9/1/2010	Lisa E. Redfern	---	Hermann, MO
52	9/3/2010 (rec'd)	Kate Engemann	---	---
53	9/7/2010	Geralyn Gloe	---	Hermann, MO
54		Eugene and Wanda Casarotto	---	---
55	9/7/2010 (rec'd)	Marie Colabello et al.	Residents of Hermann Form Letter	Hermann, MO
56	9/7/2010	Diane Pope	---	---
57	9/7/2010	Laura Feldman	---	---
58	9/7/2010	Cathi Utley	---	---
59	9/7/2010	Debra Brethorst	---	---
60	9/7/2010	Jeremy Overkamp	---	---
61	9/7/2010	Glenn Brethorst	---	---
62	9/7/2010	Christine Coup	---	---
63	9/7/2010	Kim M. Crowe	---	---
64	9/7/2010	Klye Crowe	---	---
65	9/7/2010	Manty Coup	---	---
66	9/7/2010	Dan Kemma	---	---
67	9/7/2010	Wendy Fisher	---	---
68	9/7/2010	Dearrell Reinhardt	---	---
69	9/7/2010	Marty and Dana Bruckerhoff	---	---
70	9/7/2010	Lisa Winkelman	---	---
71	9/7/2010	William and Marie Colabello	---	---
72	9/7/2010	Christi Overkamp	---	---
73	9/7/2010	Rodger and Brenda Kempker	---	---
74	9/7/2010	Gary and Kathy Rohlfing	---	---
75	9/7/2010	Diane Spechn	---	---
76	9/7/2010	Lindsay M. Flint	---	---
77	9/7/2010	Jim Clay	---	---
78	9/3/2010	Barbara Flint	---	---
79	9/7/2010	Daniel Burns	---	---
80	9/7/2010	J. Scott Rood	---	---

Table 10.2-1 List of Commenters on the Draft EIS

Letter ID	Date	Name	Organization	Location
81	9/7/2010	Ray Rood	---	---
82	9/7/2010	Mr. and Mrs. Brian Larkin	---	---
83	9/7/2010	Michael Rood	---	---
84	9/7/2010	Jen Mikiska	SPF Landscaping, Inc.	---
85	8/26/2010	Brian Viehmann	Limited Leasing Company	Old Monroe, MO
86	8/26/2010	Larry Moore	ConAgg of Missouri	---
87	8/26/2010	Joseph Gibbs	Missouri Levee and Drainage District Association, Upper Mississippi, Illinois and Missouri River Association	Columbia, MO
88	8/26/2010	Steve Schulte	Jotori Dredging Company	St. Louis, MO
89	8/26/2010	John Bremser	Kansas City, Missouri Water Treatment Plant	Kansas City, MO
90	8/26/2010	Tom Schrempp	WaterOne	Johnson County, KS
91	8/26/2010	Randy Asbury	Coalition to Protect the Missouri River	Higbee, MO
92	8/25/2010	Steve Engemann	Hermann Sand & Gravel, Inc.	---
93	8/26/2010	Mike Odell	Holliday Sand and Gravel Company	Lenexa, KS
94	8/26/2010	Ray Bohlken	Capital Sand Company, Inc.	Jefferson City, MO
95	8/26/2010	Dan Engemann	District Director for Congressman Blaine Luetkemeyer	---
96	8/26/2010	Danny Kuenzel	---	Washington, MO
97	8/26/2010	Tim Buddemeyer	Councilman	Washington, MO
98	8/26/2010	Jeremy Hecktor	---	Marthasville, MO
99	8/26/2010	Scott Jacob	---	---
100	8/26/2010	Robert Struckhoff	Doris Bottom Levee District	Defiance, MO

10.3 SUMMARY OF COMMENTS ON THE DRAFT EIS

A total of 515 substantive individual comments were identified from the letters received, and 16 people provided verbal comments during the public meeting. Comments received during the Draft EIS comment process were considered in the preparation of this Final EIS. In some cases, the Draft EIS was amended with updated or corrected information, and in some limited cases, additional analyses were required to adequately address the issue raised. The topics that received the greatest number of

comments on the Draft EIS were Geology and Geomorphology, Economics and Demography, Infrastructure, and a set of comments grouped under the category General.

Various comments included suggestions about what should or should not be authorized in the pending permit decision. The NEPA process is one of evaluation and disclosure of potential environmental impacts and does not determine what can or cannot be permitted. The Final EIS describes the anticipated consequences of the Proposed Action and alternatives and identifies an Environmentally Preferred Alternative that balances the various public interests, including the need for aggregate and the need for a stable river system providing other services including water supply. The identified Environmentally Preferred Alternative would allow a level of dredging with associated restrictions that are anticipated to result in no more than slight river bed degradation in the near term and long term. The Final EIS does not, however, state what will or will not be permitted. That decision will be based on the Environmentally Preferred Alternative with modifications determined through the permit evaluation process required by Section 404(b)(1) of the CWA. The factors considered (including these public comments) and conclusions reached in that process will be described in the ROD that will be published no sooner than 30 days following publication of this Final EIS.

Table 10.3-1 Comment-Response Matrix

Comment ID[a]	Comment	Response
Comment Category: Purpose and Need		
04-005	Commenter indicates that the purpose and need for an action are developed before alternatives are developed, and that authorization of any as yet unforeseen proposed dredging permits would appear difficult, if not impossible to analyze at this point.	As described in the Draft EIS, the USACE developed the purpose and need for the action before the alternatives were formulated. The USACE understands that authorization of any "…as yet unforeseen proposed dredging permits…" could not be acted upon until such time as applications are received. However, the USACE meant to communicate that it would use the Final EIS as a basis in part, as well as the findings in the ROD, for considering new applications in the future.
04-006	Commenter suggests that the statement of purpose and need should be revised to reflect the Corps' reason for the EIS, and that the EIS should explain the Kansas River EIS and current status of commercial dredging on the Kansas River.	On page 1-3 in the Draft EIS, the USACE has correctly stated the purpose and need for the project in accordance with NEPA guidelines and implementing regulations in Title 36 of the Code of Federal Regulations at 1502.13 (36 CFR 1502-13) and 33 CFR 320.4 Also, page 1-4 of the Draft EIS under "Scope of the EIS," correctly reflects that the purpose of the EIS is to inform USACE decision makers of the environmental effects of decisions regarding authorization of dredging to commercially extract sand and gravel from the LOMR. These statements accurately reflect the USACE's intent. Regarding dredging in the Kansas River, at numerous locations in the Draft EIS, including on page 1-3, the situation with the Kansas River is described (see page 1-3; page 2-29 "Dredging on Other Rivers"; and throughout Chapters 3 and 4 of the Draft EIS). The Final Regulatory Report and Environmental Impact Statement for Commercial Dredging Activities on the Kansas River is cited in the EIS and is available to the public online at http://www.nwk.usace.army.mil/regulatory/Dredging/KS/FinalEIS_Jan1990.pdf.
43-005	The commenter suggests that Alternatives A and B and the No Action Alternative do not meet the Project purpose and need.	Chapter 1 of the EIS explains the USACE policy and regulatory requirements for alternatives analysis. As stated on page 1-2 of the Draft EIS, NEPA guidelines and implementing regulations in 36 CFR 1502.13 and 33 CFR 320.4 require that, in addition to the Proposed Action, federal agencies must evaluate a reasonable range of alternatives and the alternative of taking no action. The No Action Alternative by law must be included in an EIS, and it is the basis for a comparison of the impacts of the alternatives. As stated on page 2-26 of the Draft EIS, NEPA requires that one of the alternatives evaluated in detail in an EIS is the No Action Alternative. As stated in the Draft EIS on page 1-3, the basic (i.e., fundamental, essential, or irreducible) purpose of the Proposed Action is to supply the aggregate required to support the region's construction and manufacturing needs. The Draft EIS includes environmental analysis of the Proposed Action, No Action Alternative, and other action alternatives that would allow continuation of some commercial sand and gravel dredging in the LOMR. Imbedded in the No Action Alternative and each of the action alternatives is the fact that alternate sources of commercial sand and gravel would be needed to

Table 10.3-1 Comment-Response Matrix

Comment ID[a]	Comment	Response
		supplement sand and gravel dredged from the Missouri River in order to meet some or all of the regional demand. Therefore, each of the alternatives examined meets the basic purpose and need, including Alternatives A and B, because they would supply sufficient aggregate required to support the region's construction and manufacturing needs, but with a different mix of sand and gravel sources, and with a different profile of impacts. The characterization and comparison of the impacts of different alternatives that meet the Project purpose and need is at the heart of the analysis in the EIS.
43-009, 43-101	Page 1-8, paragraph 5, first bullet point. It is the Dredgers' position that there is no practicable alternative. The objective is to mine the assets of the States of Kansas and Missouri (paying a royalty where appropriate). There is no other alternative which provides the assets of those states (bed of the river).	The USACE must address practicability of alternatives under its regulations implementing NEPA in compliance with Section 404(b)(1) of the CWA. As stated in Section 1.2.2, "Purpose and Need," for the purposes of the CWA, the basic (fundamental, essential, or irreducible) purpose of the Proposed Action is to supply the aggregate required to support the region's construction and manufacturing needs. Under Section 404(b)(1) guidelines, an alternative is practicable if it is available and capable of being done after taking into consideration cost, existing technology, and logistics in light of overall project purposes. The alternatives examined in the Draft EIS and Final EIS would provide the aggregate required to support the region's construction and manufacturing needs from a combination of Missouri River sources and therefore are practicable alternatives. Under Section 404(b)(1) guidelines, if it is otherwise a practicable alternative, an area not presently owned by the applicant that could reasonably be obtained, utilized, expanded, or managed in order to fulfill the basic purpose of the proposed activity may be considered.
43-017	Page 1-15, paragraph 1. "Recognizing the importance of the river bed degradation problem, the USACE Kansas City District initiated the Missouri River Bed Degradation Reconnaissance Study in 2008." – Delete the importance of. In the scope of the problems and concerns of the Missouri River Basin, there is little importance to the issue of bed degradation. As an example, the loss of flood control capacity in Lewis and Clark Lake by the retention of sediment behind the dam creates considerably more important issues than bed degradation.	The importance of river bed degradation and its potential impacts to infrastructure, habitat, and the dredging industry was initially documented in the 2006/2007 permit decision process that led to the requirement for preparation of an EIS. No change was made to the text.
Comment Category: Proposed Action, Alternatives, and Alternate Sources of Sand and Gravel		
03-002	Based on our review, we have rated the Proposed Action and Alternative C as EU ("Environmentally Unsatisfactory"), and recommend that a permit not be issued for these alternatives. Alternative B is rated as EO ("Environmental Objections"), and we also recommend that a permit not be issued for this alternative.	Section 2.7 of the Final EIS identifies the Environmentally Preferred Alternative selected for each segment of the river. These were Alternative C for the St. Charles and Jefferson City segments, Alternative B for the Waverly and St. Joseph segments, and Alterative A for the Kansas City segment. Section 2.7 also discusses the reasons for selecting those alternatives and several ways to address the underlying concerns of the

Table 10.3-1 Comment-Response Matrix

Comment ID[a]	Comment	Response
	Alternative A is rated as EC ("Environmental Concerns"), and the No-action Alternative is rated as LO ("Lack of Objections"). We have also rated the adequacy of the Draft EIS as 2 ("Insufficient Information"). Additional detailed comments are also enclosed, as well as a "Summary of Rating Definitions and Follow-Up Actions."	USEPA ratings. Evaluating the alternatives by each river segment and developing the Environmentally Preferred Alternative—based both on segment volumes and spreading out the localized effects of dredging take around the concentrated areas—is considered a logical approach to addressing USEPA's concerns. The USEPA ratings were based on selecting a particular alternative for the entire LOMR. The USACE recognizes that some areas of the Final EIS have "insufficient information" but asserts that the Final EIS is based on the best available information at this time. Various studies and research are ongoing concerning the LOMR. Section 2.7 and Chapter 6 discuss ways to incorporate information from forthcoming studies and additional data gathered through various monitoring efforts into future dredging permit decisions.
03-006	The comment states that status quo dredging under Alternative C, according to the Draft EIS, would not be expected to significantly increase bed loss in the Jefferson City and St. Charles reaches but only if dredging is spread more evenly throughout these reaches and not concentrated, as is the current practice, in segments with significant bed loss (i.e., RM140 – RM 150 in the Jefferson City reach and RM 0 – RM 50 in the St. Charles reach). Our previous recommendations regarding increased dredging limitations in the Kansas City, Jefferson City, and St. Charles reaches and more uniform dredging in the other two reaches are also pertinent to Alternative C.	Please see discussion of the Environmentally Preferred Alternative (Section 2.7) and proposed mitigation to reduce effects of intensive dredging (Section 6.2.1).
03-006	The comment states that status quo dredging under Alternative C, according to the Draft EIS, would not be expected to significantly increase bed loss in the Jefferson City and St. Charles reaches but only if dredging is spread more evenly throughout these reaches and not concentrated, as is the current practice, in segments with significant bed loss (i.e., RM140 – RM 150 in the Jefferson City reach and RM 0 – RM 50 in the St. Charles reach). Our previous recommendations regarding increased dredging limitations in the Kansas City, Jefferson City, and St. Charles reaches and more uniform dredging in the other two reaches are also pertinent to Alternative C.	Please see discussion of the Environmentally Preferred Alternative (Section 2.7) and proposed mitigation to reduce effects of intensive dredging (Section 6.2.1).
11-001, 12-001, 13-001, 14-001, 17-001, 21-007,	We support our local commercial sand dredging operations and encourage you to continue commercial sand dredging on the Missouri River at levels no less than current production.	Comment acknowledged. This EIS describes the anticipated consequences of the proposed and alternative actions and identifies the Environmentally Preferred Alternative. However, it does not determine what will or will not be permitted. That decision is reached through the permit

Table 10.3-1 Comment-Response Matrix

Comment ID[a]	Comment	Response
23-001, 24-001, 25-001, 26-001, 27-001, 28-001, 29-001, 36-001, 45-006, 46-001, 48-001, 49-001, 53-001, 54-001, 55-001, 56-001, 57-001, 58-001, 59-001, 60-001, 61-001, 62-001, 63-001, 64-001, 65-001, 66-001, 67-001, 68-001, 69-001, 70-001, 71-001, 72-001, 73-001, 74-001, 75-001, 76-001, 77-001, 78-001, 79-001, 80-001, 81-001, 82-001, 83-001, 84-001		evaluation process required by Section 404(b)(1) of the Clean Water Act. The factors considered (including these public comments) and conclusions reached in that process will be described in the Record of Decision that will be published no sooner than 30 days following the publication of this Final EIS.
43-001, 43-019, 43-100, 43-113	Various comments state that the Proposed Action of the Final EIS should not include the amounts proposed to be dredged by any applicants not currently authorized to dredge in the LOMR. Reasons given in the comments include the fact that the unauthorized applicants did not share the cost of developing the EIS and do not have any legal right to the river.	The 2007 dredging permit decision determined that the LOMR had degraded significantly at various locations in the USACE Kansas City and St. Louis Districts. The locations and extent of that degradation were strongly correlated with the locations and cumulative amount of bed material extracted during that time. Because there were various existing and currently proposed dredging operations in the LOMR and the USACE could anticipate then unknown proposals in the future, the USACE determined that an EIS was needed to look holistically at the impacts of commercial dredging in the LOMR. By public notice, the USACE requested applications for any proposed dredging

Table 10.3-1 Comment-Response Matrix

Comment ID[a]	Comment	Response
		operation and received applications from the existing dredgers as well as several new applicants. Regulatory Guidance Letters 05-08 and 88-15 state that EISs for regulatory actions should normally be prepared by a third-party contractor directed by the USACE but paid by the proponent (permit applicant). Although several new applicants expressed a willingness to contribute financial resources to help pay for the preparation of an EIS, in this case, those applicants that were already authorized to dredge in the LOMR agreed among themselves to contract with a third party to prepare an EIS and to divide the full cost of the EIS between themselves. The USACE is required to consider any and all permit applications and could not exclude the proposed new operations solely because the other applicants would not allow them to share the cost of the EIS. The Final EIS evaluates the environmental consequences of the proposed level and location of dredging (including the two proposed new operations and expansion of two existing operations) and four lower levels of dredging ranging from no dredging to Alternative C, which is the average level of dredging between 2004 and 2008 (which was lower than was authorized). The results of the EIS evaluation of environmental factors that are directly related to the level and general location of dredging and the associated bed degradation are not specific to, nor the property of, the currently authorized Dredgers and can be applied to both the current and future permit applications. Environmental impacts that are related to the specific location, equipment, and methods to be used by The Master's Dredging Company, Edward N. Rau Contractor Company, and any future applicants are not fully addressed in the Final EIS. These entities would need to provide additional data and analysis and an addendum to the Final EIS to complete their applications. In addition, the Environmentally Preferred Alternative identified by the Final EIS allows a maximum annual dredging amount from the LOMR that is less than the average amount dredged in recent years by existing dredgers and is therefore unlikely to support expanding current dredging operations or authorizing new dredging operations. Therefore, additional information and analysis of proposed operations for The Master's Dredging Company and Edward N. Rau Contractor Company may not be necessary.
43-008, 43-117	Comment suggests that Proposed Action analyzed in the Draft EIS is not the "applicants preferred alternative".	The USACE has prepared this EIS to inform agency decision makers of the environmental consequences of approving the action described in permit applications submitted to the USACE prior to or proximate to the time preparation of the Draft EIS commenced. Eleven individual permits applications were submitted and review of the permit applications under NEPA was combined into a single EIS because of the similar nature, overlapping project areas, and indistinguishable effects of the proposed dredging operations. Therefore, the Proposed Action as defined under NEPA guidelines constitutes the combined requests of applications, with no predetermined order under

Table 10.3-1 Comment-Response Matrix

Comment ID[a]	Comment	Response
		which individual applications and their associated impacts would be evaluated in series. The term "applicant's preferred alternative" is a term used in the NEPA process and is considered to be equivalent to the Proposed Action. It is also noted that several of the applications were tendered by companies who do not presently hold dredging permits. The scope of environmental review performed under NEPA does not distinguish between permit applicants based on their past actions.
43-020	The commenter claims that the alternatives presented are not practical, and that the No Action Alternatives and Alternatives A and B do not meet the purpose and need statement.	Each of the alternatives examined would meet the purpose and need; see response to Comment 43-00. Regarding practicability, each alternative examined in the EIS was judged to be broadly practicable, but each would result in different impacts on the environment, the local and regional economy, and the commercial sand and gravel dredging industry. The question of whether any alternative or combination of alternatives is practicable for an individual dredger is not a question to be addressed in the EIS. The USACE will use the results of the EIS in determining its permit decisions in the ROD, where the question of practicability will be fully addressed.
43-021, 43-037, 43-042, 43-158, 43-162	Commenters criticized the rejection of the "mine-and-relax" strategy as an alternative, and suggest that it was rejected out of hand, but also recognize that the "mine-and-relax" strategy was explicitly included in the Draft EIS "…in the mitigation section a reasonable respect for this as mitigation." The commenters contend that use of the "mine-and-relax" approach would reduce dredging concentration and associated localized dredging impacts, and that the tools to implement this strategy are in place and have merit to be included as mitigation.	On pages 2-54 and 2-55 in the Draft EIS, the USACE provided a detailed explanation of the No Cap Mine-and-Relax Strategy and why it was rejected as an alternative. As noted in the EIS, alternatives to the Proposed Action were defined by a range of annual authorized amounts of commercial dredging from the LOMR. Because the mine-and-relax strategy. It is only an approach to reducing localized intensity, not an alternative with any specific limit of commercial dredging amounts. The reference to the "limits in existing permits" does not define a limit on annual dredging amounts by river segment or for the river overall. The suggestion of reducing the concentration of dredging (i.e., dredging intensity or tons per mile) as mitigation was found to help to reduce localized river bed degradation. Means to reduce localized impacts of dredging were considered and specifically discussed in the Draft EIS on page 6-4 (Section 6.2.1, "Restrict Concentrated Dredging") and on page 6-6 (Section 6.2.4, "Use a Mine-and-Relax Strategy to Limit Dredging Intensity"). Although reducing dredging intensity has the potential to reduce localized dredging impacts, the effects on general degradation would depend on the total amount dredged in a broader reach or segment. This is based on the need for dredging amounts to balance with the ability of the river to replace the bed material lost to dredging at the dredged location without scouring it from the river bed. For the strategy to be effective, it must include a limit on the total amount dredged, and dredging intensity must be limited over a time period that allows for effective recovery. This approach was evaluated in greater detail between the Draft EIS and the Final EIS. The Final EIS includes an updated analysis of dredging intensity as it correlates with

Table 10.3-1 Comment-Response Matrix

Comment ID[a]	Comment	Response
		localized river bed degradation so that more objective guidelines for limiting dredging intensity could be developed. These analyses and a potential process for limiting dredging intensity are included in the Final EIS in Section 3.4.6.2 and Appendix A.
43-022	The comment states that developing new sand and gravel mining operations in the floodplain is not realistic due to permitting difficulties and the potential to adversely affect levee district performance.	The development of new mining operations over the long term is plausible, particularly in response to market pressures generated by reductions in commercial dredging from the LOMR. A new pit mine is currently under development by one of the dredging applicants. A comprehensive description of the process for the development of new alternate sources in the region is presented in Section 2.3.2.5.
43-023 (AS), 43-024, 43-025, 43-051, 43-102, 43-026, 44-09, 05-002, 21-003, 40-003, 43B-003, 45-002, 43-087, 94-001, 43-102	These comments generally contend that the alternate sources used in the economic analysis are not viable sources to replace displaced supplies from the LOMR for a number of reasons. These reasons include the inability of alternate sources to produce the quantities of construction sand and gravel required due to the fact that these resources are not readily available, particularly for concrete sand and materials that meet road specification requirements. Further, the comments claim that development of additional capacity at alternate sources is not realistic, including the Kansas and Mississippi Rivers where no new permits have been issued. The rationale is that adequate capital may not be available for expanding existing sand and gravel operations, there may not be willingness to expand by mine operators, many operations are open only on demand and captive to specific purchases, and environmental compliance issues may force operations to close. In addition, there are specific comments related to available capacity on the Kansas River. The Kansas River is not perceived to be viable alternate source for the following reasons: dredging permits are suspended; there is insufficient demand in the local market in the current economy, and once the economy recovers, the sand will be needed within its local market; the permit is all or partially depleted and the operator is waiting for the river to refill the deposit so the entire permitted tonnage can be dredged; and the Kansas River sand is located too far from the LOMR market.	The analysis of the capacity of alternate sources to meet displaced supplies from the LOMR under the various Project alternatives is presented in Section 2.3.2.1 and Section 2.3.2.2 of the EIS. The analysis focuses on several types of alternate sand and gravel sources, as outlined below. Estimates of additional capacity to produce sand and gravel from the Kansas and Mississippi Rivers were based on the difference between maximum permitted levels of existing dredging permits and historical production data reported by the USACE. Based on this information, there is currently authorized, but unused, sand production capacity in these river systems that represents a short-term alternate source of sand and gravel in the region. For the Kansas River, it is acknowledged that, if dredging occurs to maximum permitted levels, there is the potential that dredged reaches of the river may surpass the 2-foot degradation limit and the authorized amount would decrease. Conversely, portions of the Kansas River have aggraded in recent years and may be reopened to dredging in the future. It is therefore difficult to predict what allowable dredging levels will be in the future, and the best estimate for allowable dredging levels must be based on current conditions. The same general principles apply to the Mississippi River. Specifically, the Mississippi River represents only a short-term alternate source of sand and gravel and could be eliminated in the future if the current permits are not reissued or extended because of ESA issues. In summary, (1) the Kansas and Mississippi Rivers are clearly immediately available to produce the currently authorized but unused tonnage; (2) expansion of their capacity is unlikely; and (3) their longevity is unknown and maybe even not very likely. For modeling purposes, it was also necessary to estimate the excess capacity of existing sand and gravel mining operations that could potentially serve as alternate sources to material dredged from the LOMR. Actual production data for individual mines were not available from the MDNR, as this information is considered confidential and proprietary. Further, because of confidentiality restrictions, it was not feasible to query mining operators about their available capital and production capacity. As a result, excess

Table 10.3-1 Comment-Response Matrix

Comment ID[a]	Comment	Response
		capacity was estimated based on the difference between peak production periods and current production levels, and the assumption that sand and gravel production could at least return to peak levels if needed to help offset reductions in LOMR dredging in the short term. As noted above, it was not possible to evaluate each mining operation relative to available capital, operating parameters, and regulatory compliance issues. Accordingly, it is acknowledged that the figures reported in the EIS for available capacity are only planning-level estimates. The alternate source analysis also considered the capacity of alternate sources to meet road construction material specifications as required by the MoDOT. This analysis is based on (1) the estimated quantity of sand and gravel from the LOMR that has been historically used by the MoDOT (i.e., baseline demand); and (2) available capacity at sand and gravel mining operations that have been identified as meeting MoDOT specifications. Estimates of MoDOT demand are based on data provided by the MoDOT in a letter to MDNR dated January 29, 2009. The letter indicates that the MoDOT had used approximately 544,000 and 427,000 tons of sand from the LOMR in 2007 and 2008, respectively, which represents approximately 57 percent of total sand use by the MoDOT in those years. Using this figure and historical sand use by the MoDOT between 2004 and 2008 (which captures peak-use periods), it is estimated that the baseline demand for LOMR sand is approximately 497,100 tons annually. From a supply perspective, alternate sources that were assumed to provide material meeting MoDOT specifications include the Kansas, Mississippi, and Meramec Rivers, as well as other approved land-based sources of Class A sand identified by the MoDOT. Based on the estimates of available capacity at these sources, the capacity at operations producing Class A sand appears to be sufficient to meet MoDOT demands in lieu of dredging from the LOMR.
43-026	The commenter disagrees with the statement on page 2-43 of the Draft EIS that "With an available capacity of approximately 7.9 million tons, the alternate sources would be able to produce the required amount of replacement sand and gravel supplies under all of the alternatives, including the No Action Alternative (where dredging of the LOMR would cease entirely)." The commenter contends that if this statement were factual, then these sources would already be filling the demand and the market would meet the requirement.	It is acknowledged that sand and gravel from the LOMR generally represents a high-quality and low-cost source of material based on geological characteristics and the proximity of the resource to major demand centers along the river. Because of these cost and quality characteristics, it is currently more cost effective and preferable to utilize LOMR supplies rather than other supplies available in the region. Accordingly, it is intuitive that the alternate sources evaluated in the EIS are not currently utilized to meet market demands currently met by LOMR supplies. However, if LOMR supplies become unavailable, it was assumed that the demand for sand and gravel would be met from other higher-cost and, in some cases, lower-quality sources in the region. It is acknowledged that the quality of materials from these alternate sources may not be comparable to that of LOMR supplies. However, except for projects requiring certain material specifications (e.g., MoDOT projects), it was assumed that supplies from

Table 10.3-1 Comment-Response Matrix

Comment ID[a]	Comment	Response
		alternate sources can be used as a substitute to LOMR supplies for most uses. It is also acknowledged that the demand by some consumers for LOMR supplies may be inelastic. From a statewide perspective, however, consumer demand would likely gravitate toward lowest-cost sources that meet project requirements. Also refer to response to Comment 43-023 (AS) for more information on the viability of alternate sources in the region.
43-028	Page 2-47, first bullet point, Alternative B. "reasonably expected." The terminology in this section demonstrates the biased position with regard to this analysis. It is the dredgers' position that there has been a predetermination.	The language "reasonably expected" is used in the context of setting a criterion for development of an alternative to be evaluated in the Draft EIS. No change was made to the text.
43-029	A commenter stated that the tonnage represented by Alternative C, 6.9 million tons per year, was negotiated between the USAC and the dredgers in response to alleged bed degradation but the Draft EIS indicates the tonnage was pulled out of the sky, never discussed, and never debated. The commenter said that the tonnage represents the level of dredging that would not exacerbate the degradation problem and is a significant reduction from previous permit levels. The commenter questioned why this was not clearly explained in the Draft EIS and suggests that the EIS should evaluate an alternative with the annual extraction limit authorized in previous permits.	Initially, the authors of the EIS analyzed the Proposed Action, the No Action Alternative, and Alternatives A and B which were based on two different percentages of the bed material load. However, the USACE determined that this left a gap between the combined level of dredging proposed by all the applicants, represented by the Proposed Action, and the next highest level of dredging, Alternative B. The USACE concluded that the EIS should include a fifth alternative between those two levels. One possibility was using the levels proposed in 2008 by the currently authorized and operating dredgers. Because that amount included increased dredging levels by several dredgers, it was not representative of recent dredging activity. Another possibility was the amount authorized by the USACE in 2007. The last considered potential basis for Alternative C was the average annual extraction level for each segment from 2004 to 2008. Dredging on the LOMR in 2004 through 2006 reached as high as 8,000,000 tons and then dropped to around 5,500,000 tons in 2008. Since the recession began in 2008, annual extraction has dropped even lower. The 2004–2008 average annual extraction level was selected to be the basis for Alternative C because it best represents the recent and near-future market demand for sand in the region and because the USACE could more accurately show the environmental consequences of the level of dredging that actually occurred than predict what might have happened under the other two scenarios. The commenter suggests that the EIS should have used the limits authorized in 2007 for Alternative C because it more accurately represents what the currently authorized dredgers are requesting and because the USACE previously determined that that level of dredging would not exacerbate the degradation problem. The USACE acknowledges that it would have more accurately represented what the currently authorized dredgers are requesting but, as stated above, we could more accurately show the environmental consequences of the level of dredging that has occurred recently than we could predict what would happen at higher levels of dredging. The comment that the USACE

Table 10.3-1 Comment-Response Matrix

Comment ID[a]	Comment	Response
		previously determined that the level of dredging authorized in 2007 would not exacerbate the degradation problem is not correct. In the 2007 permit decision, the USACE had determined that an EIS was needed because unlimited commercial dredging in the LOMR was contributing to significant impacts associated with bed degradation. However, rather than suspending all commercial dredging operations until an EIS was completed, the USACE capped annual extraction at the levels reported in 2007 (which were slightly lower than in recent years) through 2009, by which time an EIS for commercial dredging was expected to be completed. After much coordination with the Dredgers, the USACE determined that this level of dredging along with the other mitigating permit conditions should not result in significant impacts when authorized over a short period of time needed to complete an EIS. Never in discussions with the Dredgers or in the supporting decision documents did the USACE indicate that this level of dredging was not expected to cause continued degradation if continued for a longer period of time.
43-033	Page 2-51, first bullet point, Annual tonnage. The annual tonnage listed in the Proposed Action unnecessarily limits the review and applies a presumption of bias that a problem actually exists. We contend that the proposed alternative should allow for unlimited tonnage and should base tonnage on projected demand over the next 20 years. Since the dredgers did not request this Proposed Action in its context, the analysis forces business presumptions and presumes bed degradation is an absolute reality. The river is aggrading. See Appendix A.	In each case, the dredging permit applications submitted by the Dredgers to the USACE specified an annual dredging amount. In no case did the applicant request that an amount other the amount specified be evaluated in the EIS. During preparation of the EIS, the Dredgers were further requested to determine the maximum amount that they would likely dredge from a single segment, with the specification that the total amount dredged under a single permit would not exceed the permitted amount regardless of the sum of amounts indicated for individual segments. Also see General Response #1 immediately following this Comment-Response Matrix.
43-035	Page 2-52, first bullet point, Annual tonnage. The choice of tonnage is arbitrary and presumes bed degradation has a negative consequence. This presumption is subject to public debate, which is not being permitted or discussed as a result of how these alternatives are being characterized. Missourians, owner of the bed, should be able to decide the appropriate choices of public policy whether their bed can be used for the benefit of reduced road improvement prices.	The choice of tonnage was not arbitrary and is fully described in Section 2.4.1, "Rationale for Setting Alternative Dredging Amounts." The EIS process, which has included public scoping meetings, comment periods, and review and comment on the Draft EIS, has provided a forum for public review and comment.
43-038	Commenter suggests that the Draft EIS did not investigate "mine and relax" proposal.	The Draft EIS did investigate the proposed "mine-and-relax" strategy. See response to Comment 04-006.
43-055	The commenter claims that Alternative A would effectively eliminate dredging and is therefore no different than the No Action	The No Action Alternative and Alternative A are in fact considerably different. Chapter 2 in the EIS fully compares and contrasts the differences between these alternatives. The No Action Alternative would result in cessation of commercial dredging in the LOMR

Table 10.3-1 Comment-Response Matrix

Comment ID[a]	Comment	Response
	alternative.	(Final EIS, page 2-26). In contrast, under Alternative A, commercial dredging would continue but would be permitted at levels at the lower end of the range that are reasonably expected to reduce the contribution of sand and gravel dredging to continued river bed degradation in the LOMR—approximately 2 million tons per year. The EIS does not evaluate the economic viability of individual company operations within the alternative but reasonably concludes that at the dredging level set, some companies would be able to continue to operate.
43-113	Page 4.4-2, paragraph 2. "…new sand plants proposed in the St. Joseph and St. Charles segments." – As previously stated, with the presumptions presented in this document, the inclusion of any new sand plants as a probable presumption, is not reasonably certain, and should not be included in this evaluation.	Sand plants proposed by dredging applicants are essential elements to the proposed dredging operations and must be considered in the EIS as connected actions. See response to comments 43-001.
43-139	The commenter states that page 4.9-13, paragraph 1 of the Draft EIS should be modified as follows: "The potential indirect effects of using alternate sources have not been quantified because the locations of alternate sources are not known at this time and it cannot be implemented with the current specifications for concrete."	The commenter does not provide any factual evidence that alternate sources evaluated in the Draft EIS cannot be utilized with the current specifications for concrete. It is understood that natural river sand from the Kansas, Mississippi, and Meramec Rivers provide high-quality concrete sand, and these rivers were included as alternate sources in the economic evaluation. Also included as alternate sources were sand and gravel mining operations identified by the MoDOT as approved providers of Class A sand. However, it was not possible to query all other mining operations in the state relative to the specifications of their products. It was assumed that these other operations produce sand and gravel that is suitable for most applications other than road construction specifications required by the MoDOT. The transportation-cost model assumes that MoDOT demands could be met only by approved providers of Class A sand.
44-10, 43B-005	Commenters raise several issues related to the higher costs, insufficient deposits, potential environmental impacts, and lower quality of sand from new floodplain pit operations that may be developed in response to reduced LOMR supplies.	The economic analysis presented in the Draft EIS includes a short-term and long-term evaluation of the sand and gravel market in response to changes in production levels from the LOMR. The short-term analysis assumed that no new open-pit floodplain operations would be developed and focused exclusively on existing mining operations that represent alternate sources to LOMR supplies. These short-term effects were quantified using a transportation-cost model that focuses on changes in shipping costs resulting from using alternate sources that are more distant relative to LOMR operations. The long-term analysis considered the development of new mining operations; because it is not possible to predict where these new operations would be developed, the analysis was necessarily qualitative. The economic analysis acknowledges that, for all alternatives with reduced dredging allocations, development of new floodplain operations would result in higher production costs and additional processing costs, and resultant higher costs would be incurred by the construction industry. In fact, information provided

Table 10.3-1 Comment-Response Matrix

Comment ID[a]	Comment	Response
		by the commenter is used as a reference to these increased costs (see page 4.10-31). In addition, the Draft EIS acknowledges that the development of new open-pit floodplain operations could result in environmental effects. It is not within the scope of this EIS to provide a comprehensive evaluation of the effects of new operations. Such an evaluation would be speculative without knowing the type, size, location, and operational characteristics of the new operations.
44-11	The impacts of the alternate supplies have not been adequately evaluated. Any negative impact of Alternative C is met or exceeded by the negative impacts of the Alternate Sources, such as flood plain or mining in stream beds. Both of these alternate sources necessitate trucking sand further to end users. This is contrary to our local, regional and national goals and would be an irresponsible solution. River dredging is sustainable at the correct level (below bed material load levels). Flood plain mining is not sustainable. It forever uses up priceless agricultural land and developing wetlands. The River delivers sand directly into the cities near major highways. Flood plain pits are out of town so the sand must be hauled tens of miles on county roads that were not designed for heavy truck traffic. The River has already removed all soil and overburden and classified the sand. The flood plain pit requires a full time earthmoving operation to strip the overburden and even then there is 15 feet or more unusable fine sand that is not found in the River. The cost of land, stripping, wasted fines and reclamation add another $4 per ton cost. The added emissions from pit mining were not adequately investigated. The added sand trucking and dirt stripping, hauling and piling result in a tremendous increase in fuel consumption and the subsequent emissions. Pit mining should be a last resort. Contrary to the Draft EIS's reduction in the cost of sand ($-68M net), we estimate the annual increased cost of replacing river dredging with pit mining at $28 Million ($4/ton) a year increasing as the pit mines are depleted and move farther out of town. This is significant money and it will not solve degradation, and may not even reduce it where existing MO River channel scour is too great to allow any sand to settle out and recover the bed.	In the EIS, the USACE has addressed the relative impacts of commercial dredging in the Missouri River and the impacts of obtaining sand and gravel from alternate sources. The best available information was used. The potential impacts on trucking, agricultural lands, and emissions were addressed along with impacts on other resource areas. The impacts of the use and development of alternate sources were addressed with the available data. By necessity, the analysis was less geographically specific, as it was not possible to identify how production and technology within the market may respond, or to specify the actual locations of expanded or new mining operations.
44-40c	Page 2-60 Table 2.6-1 Summary of Impacts of the Proposed Action and Alternatives This rote exercise in tabulation is flawed	We believe that the appropriate boundary between the Kansas City and Waverly segments is at RM 357, which is the confluence of the LOMR and the Big Blue River.

Table 10.3-1 Comment-Response Matrix

Comment ID[a]	Comment	Response
	and should be completely redone because of the following errors: 3. Draft EIS has incorrectly distributed proposed dredging tonnage in the KC and Waverly segments by shifting the boundary river mile from RM 350 in the data request, to RM 357 in the Draft EIS analyses.	Please see Section 3.3 for details.
44-40e	Page 2-60 Table 2.6-1 Summary of Impacts of the Proposed Action and Alternatives This rote exercise in tabulation is flawed and should be completely redone because of the following errors: 5. Incorrectly assumes that new river sand plants would be built under Alternatives A and B. (Masters' Waldron location would comprise only 15% of the total market.)	Both The Master's Dredging Company, Inc. and Edward N. Rau Contractor Company have indicated in their application for a dredging permit that, if approved, they would exercise their permit, which would require associated sand plants. Consequently, there was no basis to exclude these companies from Alternatives A and B. Furthermore, the analysis of dredging impacts was not undertaken in relation to specific dredging companies; impacts related to all companies seeking to operate in a river segment were grouped together in the evaluation.
44-40i, 03-020	Comments suggest that the comparison of the Proposed Action to the No Action and other action alternatives must have a status quo for comparison and should have included impacts from development of alternate sources (for the No action and Alternatives A and B primarily)	NEPA requires that the decision maker be informed of the likely impacts of approving the proposed action, taking no action, or approving one of the alternatives. The purpose of Table 2.6-1 is to summarize the detailed impact assessment found in Chapter 4 of the Draft EIS in a concise format for the reader to obtain an overview. NEPA guidelines require inclusion of the No Action Alternative to allow the decision maker to compare proposed alternatives to the status quo, which is typically continuation of the present condition of the affected environment. In the case of issuing new dredging permits for the Missouri River, however, the No Action Alternative does not represent the continuation of the status quo because the existing condition includes dredging and the No Action Alternative would prohibit future dredging, which is a changed condition. NEPA regulations do not require the evaluation of the status quo; evaluation is required only of the decisions open to the lead agency. The commenter notes that Alternative C reasonably represents continuation of the current level of dredging. To the extent that the conditions attached to future dredging permits are similar to the conditions in the current permits, this is true. The Draft EIS includes characterization of the impacts associated with construction of the new sand plants proposed by two of the applicants. Because detailed plans for these plants have not been developed, the Draft EIS is not able to report impacts to the same level of detail as described for dredging activities.
44-40n	Page 2-60 Table 2.6-1 Summary of Impacts of the Proposed Action and Alternatives. This rote exercise in tabulation is flawed and should be completely redone because of the following errors: 14. Incorrectly concludes that barging sand – currently 80% of barge movement – is a negative impact to barge traffic.	The portion of Table 2.6-1 that summarizes Navigation and Transportation is found on Pages 2-62 and 2-63, not on page 2-60. The summary is provided by segment and does not state that barge movement is a negative impact to barge traffic. It does note that, for Alternative C, an increase in barge movements in the Waverly and St. Joseph segments would likely occur due to increased dredging in these segments as part of this alternative.

Table 10.3-1 Comment-Response Matrix

Comment ID[a]	Comment	Response
44-49, 44-51, 44-50	Page B-2 B.2 THE MASTER'S DREDGING COMPANY, INC. The Master's plan to dredge all material up onto the bank is not sustainable. First, permission must be obtained to operate a slurry pipeline over the Waldron Levee. Does Master's have permission for that pipeline? Second, the water carrying the sand must be returned or pumped back to the River, requiring a major wastewater permit. Third, an excess of fine sand will be brought to the bank that can never be marketed and current 404 permits do not allow reintroduction of solids in any significant quantity back into the River. These are major permitting and operational issues that must be addressed before an allocation of permitted tons is appropriate. Also, without the ability to navigate and move to other areas in the river, their deposit in front of their property will not likely meet their needs for concrete sand on a continual basis, but only on a seasonal or intermittent basis. Just look at Figure B-1 at the various dredge locations we use throughout the year. That is for a reason. If we could pump sand right in front of our dock all year we would. The river is full of sand, but one must go find the coarsest sand possible to be productive. Masters did not acquire land in Waldron solely for the purpose of River dredging. They optioned and purchased hundreds of acres for farming and possibly flood plain pit mining. The investment they made in many hundreds of acres was not likely made for just to dredge in the river. Their site is also problematic in regard to the intersection with 45 Hwy and the concerns for creating a sand pit behind the federal levee. They are facing local opposition.	The Final EIS notes that The Master's Dredging Company, Inc. plans to build a sand plant and includes a preliminary description of the facility. It also notes that a number of permits and approvals, as well as environmental review would be required for this facility to be constructed and operated in association with the requested dredging permit. Consideration of the Master's Dredging Company, Inc. application to dredge in the Missouri River does not confer any approval of the associated upland facilities even though those facilities have been generally described in this Final EIS.
Comment Category: Geology and Geomorphology		
06-002, 41-003, 43-003, 43-004, 43-010, 43-012, 43-043, 43-057, 43-070, 43-071, 43-072, 43-073,	Comments in this category attribute changes in the LOMR channel, including degradation, to BSNP structures, mainstem dams, and changes in sediment transport rather than dredging. Comments state that the Draft EIS analysis focused on dredging as the cause of degradation rather than the other factors.	See General Response #1 immediately following this Comment-Response Matrix.

Table 10.3-1 Comment-Response Matrix

Comment ID[a]	Comment	Response
43-074, 43-077, 43-079, 43-103, 43-107, 43-A011, 43-A012, 44-013, 44-015, 44-022, 85-001, 93-001, 95-001. 43-A013, 21-005, 40-005, 45-004, 44-045, 44-004, 43-A005, 43-106, 43-108, 43-033, 44-12, 44-40a		
03-001	The comment states that the Draft EIS does not provide sufficient information to assess environmental impacts that should be avoided in order to fully protect the environment. The comment asserts that (1) additional information is necessary to develop a sediment budget which would account for sediment transport, erosion, and deposition; and (2) with a sediment budget, development of sustainable approaches to sediment management in the river would be significantly improved.	The analysis in the Draft EIS of the geomorphology and potential degradation in the LOMR is the most comprehensive analysis conducted to date using the best available information. In addition to the alternatives analyzed in the Draft EIS, an Environmentally Preferred Alternative has been developed (Section 2.7) that balances potential impacts in each river segment with commercial sand and gravel extraction. Uncertainty in the data and analysis has been acknowledged and is addressed through mitigation and a monitoring and permit reevaluation process (Section 6.3).
03-005	We recommend considering opportunities to modify this alternative with regard to the St. Joseph reach so as to require a more broad distribution of dredging in order to moderate potential impacts within the area of concentrated dredging. In general, however, without additional information supporting these extraction quantities as sustainable and not likely to cause further bed loss, we believe it is more prudent to further limit extractions from all five reaches than has been proposed in this alternative. In addition, we would carryover our recommendation from Alternative A regarding further limiting dredging at locations within the three reaches experiencing acute bed loss.	The USACE has considered these comments carefully and addressed them in developing the Environmentally Preferred Alternative, as described in Section 2.7 of the Final EIS. Additional analysis of river bed degradation, measures to more broadly distribute dredging, and limiting dredging in areas with acute bed degradation were important considerations in development of the Environmentally Preferred Alternative.

Table 10.3-1 Comment-Response Matrix

Comment ID[a]	Comment	Response
03-017	Absence of a budget for the Missouri River precludes a determination of what could constitute a sustainable approach to sediment management in the river.	The sediment budget analysis in this EIS is the most comprehensive conducted to date and includes the most current data available from the USGS and the USACE. Bed material loads were estimated at three locations within the Project area with sufficient data to support the calculation (St. Joseph, Kansas City, and Hermann) for the period from 1994 to 2009 (see Section 3.4.5 and Appendix A). Although sufficient data were only available to estimate sediment loads for these three sites, they give a reasonable estimate of the dredging-sized material moving through the LOMR system. Given the variability and uncertainties associated with estimating future sediment loads and impacts, the USACE is proposing to monitor river conditions to limit potential degradation. See Section 6.3 for details on monitoring and an adaptive management framework. In regard to sustainable sediment management, this Project is only one component affecting sediment management on the LOMR. For example, the larger MRRP and other projects affecting sediment management are described in Chapter 5, "Cumulative Impacts."
04-010	Page 1-14 Section 1.5.3, Missouri River Bed degradation - This section should also note an indirect effect of bed degradation is the need to modify flows from the dams to meet the needs of water intakes in the lower river. We believe that information can be found in the Missouri River Master Manual EIS.	While it is correct that the Missouri River Mainstem Reservoir System Master Water Control Manual EIS examined the potential impacts of changes to the Missouri River Mainstem Reservoir Current Water Control Plan (CWCP) (the then-current water control plan) on water intakes, the flow alternatives were not designed to meet the needs of water takes. It would therefore be incorrect to indicate that an indirect effect of river bed degradation is the need to modify flows from the dams to meet the needs of water intakes in the lower river.
04-016	Page 3.2-10, last paragraph - According to numerous Corps documents, the CWCP is not an attempt to mirror pre-dam (natural) flows, but rather to dampen high spring flows to reduce flooding and augment low summer flows to provide navigation support, ideally through November. We recommend removing that sentence from the text.	Text has been revised in the Final EIS.
04-024	Page 4.2-19, St. Charles Segment - It is not feasible to dredge more than 100% of the bed load. The text appears to indicate that there is not enough bed load to satisfy this option, or that this option would lead to mining ancient deposits in this reach. Neither alternative is sustainable.	It is possible to dredge more than 100 percent of the bed material load; however, dredging at such a level would not be sustainable because it would involve removing all of the bed load and mining glacial deposits.
04-034	Page 5-16, Geomorphology – Much of the information in this section would be better presented in Affected Environment. We recommend that this material be moved and this section focuses	A description of the MRRP and other related programs is included in Section 3.2. Chapter 5 describes the cumulative impacts of other LOMR projects in conjunction with proposed activities. While the MRRP is potentially a significant source of sediment that

Table 10.3-1 Comment-Response Matrix

Comment ID[a]	Comment	Response
	on effects to these resources, rather than description of the resources themselves.	could affect commercial dredging on the LOMR, it is currently suspended by the Missouri Clean Water Commission through permit prohibition. To the extent that this prohibition may be lifted in the future, restoration projects may recommence, making them a likely future cumulative action and thus appropriately described in the cumulative impacts analysis.
06-001, 06-006, 41-004, 33-002,	The Draft EIS provides only a partial evaluation of the causes of Missouri River bed degradation. The importance of this decision requires that it be based on a comprehensive analysis. Therefore, I urge you to allow the continued extraction of sand and gravel from the Missouri River at the current rate until a comprehensive evaluation of bed degradation can be completed.	The analysis of the geomorphology and potential degradation in the Draft EIS is the most comprehensive analysis conducted to date. In addition to the alternatives analyzed in the Draft EIS, an Environmentally Preferred Alternative has been developed (Section 2.7 in the Final EIS) that balances potential impacts in each segment with commercial sand and gravel extraction. Uncertainty in the data and analysis has been acknowledged and is addressed through mitigation and a monitoring and permit reevaluation process (see Section 6.3 in the Final EIS).
06-007	The comments recommend incorporating the most recent (2010) CRP data into the Final EIS and revising the analysis of bed elevation changes using the revised CRP.	The 2010 CRP data were analyzed and are included in Section 3.4.6.1 in the Final EIS.
06-008	Section 3.4.6.1 – Methods of Measuring River Bed Changes Based on the hydroacoustic bed elevation data (HBED) analysis shown in Figure 3.4-21, and the stage trends shown in Figure 3.4-24, aggradation has been occurring in the Kansas City reach in 2008 and 2009. Incorporating the 2010 updated CRP into the analysis and comparing it with the 1990-2005 change in CRP water surface elevations (Figure 3.4-20 and other locations in Draft EIS) might provide further insight into how extensive this aggradation has been. Another benefit of incorporating the 2010 CRP would be to analyze the effectiveness of the restrictions put in place in August 2007, which were "intended to allow dredging to continue ... with less-than-significant impacts ..."	Based on the HBED analysis, portions of the Kansas City segment did appear to aggrade in 2009 relative to the 2007 and 2008 data. The 2010 CRP (Figure 3.4-19a), however, reduced the water surface elevation for most of the Kansas City segment relative to the 2005 CRP. The 2010 CRP estimated the 75-percent exceedance flow based on low-flow surface water elevation measurements in 2008 and 2009 and on modeled results. Direct comparison with the HBED analysis is limited because the HBED analysis spans an approximately 5-year time period and does not directly reflect river bed aggradation or degradation.
06-009, 43-015, 43-016	Several commenters requested clarification on the relationship between dredging intensity and river bed change.	Additional analysis has been incorporated into Section 3.4.6.3 and Appendix A in the Final EIS that shows the relationship between dredging intensity and total amount dredged with local bed degradation.
06-010	Section 3.4 – Conflicting data that requires further explanation. The data displayed in Figures 3.4-20 and 3.4-21 contain conflicting results, primarily at the confluence of the Grand River. Although Figure 3.4-20 displays water surface elevation, and Figure 3.4-21 displays average bed elevation both are used to	The commenter has noted a potential discrepancy between the low-flow water surface elevation data and the HBED analyses near the confluence of the Grand River and the LOMR near RM 250. Potential causes for the discrepancy include the difference in the type of data that the two graphs are displaying (water surface elevations vs. bed elevations) and the period of measured change (2005–1990 for water surface elevations

Table 10.3-1 Comment-Response Matrix

Comment ID[a]	Comment	Response
	interpret whether aggradation or degradation is occurring. Figure 3.4-20 shows a significant amount of aggradation occurring at this location, while Figure 3.4-21 displays degradation occurring at this location. This discrepancy is not addressed in the document, but it would be beneficial to have an explanation.	and 1998 to 2007–2009 for HBED). The water surface elevation change graph includes the 1993 flood event, while the HBED data do not. The confluence with the Grand River could be a location with significant effects from the 1993 flood. Other potential factors are changes in channel geometry (which would affect water surface elevations and bed elevations).
06-011	Section 3.4.6.1 – pg 3.4-71 (last sentence prior to Section 3.4.6.2) and Section 3.4.6.3 – pg 3.4-89 Commercial Dredging "Figure 3.2-2" does not exist. This reference should be removed, or corrected with what I believe is the correct reference of Figure 1.5-1. Also "Figure 3.2-3" does not exist and should be corrected with 1.5-2.	Text and figure numbers have been revised in the Final EIS.
06-013	Section 4.2 - pg 4.2-25 – Section 4.2.6 and Table 4.2-4 Under the description of Alternative A the statement is made: "would increase the amount dredged in the St. Joseph and Waverly segments." Table 4.2-4 shows a decrease from existing conditions in the amount dredged under Alternative A in the Waverly segment.	Text has been revised in Section 4.2 of the Final EIS for consistency with Table 4.2-4.
32-005	It also gave very limited consideration impacts to tributaries to the Missouri River that would be impacted by head cutting due to degradation.	Limited information is available on existing impacts to tributaries. The impacts analysis (Section 4.2) estimates potential impacts to tributaries for each alternative. Proposed monitoring includes monitoring the effects of changes on the mainstem LOMR on tributaries (Section 6.3).
33-001, 33-002, 41-004	The comments state that references are made to bed degradation throughout the Executive Summary of the Draft EIS. While some areas along the Missouri River are seeing bed degradation, it is wrong to assume and more importantly to blame the cause of the degradation on the dredging industry.	Although it is not the only cause of degradation, commercial dredging contributes to local bed degradation. See Section 3.4.6.3, "Commercial Dredging," for details. Also see General Response #1 immediately following this Comment-Response Matrix.
33-003	Comment suggests that additional factors related to bed degradation be incorporated in the description found in the Executive Summary for specific river segments.	The Executive Summary describes the mainstem reservoir system and the BSNP as major changes to the river. The Executive Summary also states that "dredging was considered by the USACE Kansas City District to be one of the contributing causes of river bed degradation..." The other causes of degradation are described in detail in Section 3.4.
39-002	One comment asks why, if the LOMR is degrading because of lack of sediment, does the St. Louis District have to conduct maintenance dredging and add dikes and chevrons in the	See General Response #1 (immediately following this Comment-Response Matrix) for a discussion of the causes of degradation and aggradation. Confluences are particularly dynamic locations that often experience aggradation or degradation in rapid succession because of the differences in their sediment transport capacities. Both the LOMR and

Table 10.3-1 Comment-Response Matrix

Comment ID[a]	Comment	Response
	Mississippi River downriver from the mouth of the Missouri River.	Mississippi River have large and different watersheds that can result in widely different river stages at any given time. If the LOMR is at a high stage with a high sediment load and the Mississippi River is at a low stage with a low sediment transport capacity, then the Mississippi River may not be able to move the sediment from the LOMR and aggradation may occur. If the situation is reversed, then the Mississippi River will not aggrade and the LOMR may aggrade near the confluence because of the backwater effect. This phenomenon also occurs at the confluences of the Grand, Lamine, Osage, and Gasconade Rivers.
39-003	When you look at 80 years instead of 5, there is no change. There has been someone dredging in Hermann since the 1950's and no change. Please take another look at the economics and look at more of a timeline in the river history. I have submitted elevation data and suspended sediment data that showed more sediment and a graph on river bed elevation in Hermann over the past 80 years to the Corps in previous documents.	Figure 3.4-27 indicates a long-term decline in average bed elevations at the USGS gage at Hermann from 1960 to 2010, a 50-year time span. Even with the recent aggradation since 2007, the 2009 bed elevation is lower than any point prior to the 1993 flood (the record begins in 1928).
43-011, 44-14, 44-19	Several commenters' suggest that dredging for the L385 levee should not be included in the report of dredging volumes or the analysis of dredging impacts.	See the updated analysis in Section 3.4.6.3 of the Final EIS regarding local bed degradation and dredging. L-385 dredging was not included in the analysis because it was not commercial dredging. The difference between the average amount dredged between 2000 and 2009 with and without the L-385 dredging (1.7 million tons) is approximately 2.5 percent. This variance does not affect the conclusions regarding river bed degradation in the EIS. See updated Table 3.4-20 in the Final EIS that includes the Jefferson City segment.
43-014	Page 1-14, paragraph 3. "River bed degradation has been demonstrated to result in extensive impacts on the characteristic of the river channel." – Delete extensive. Extensive impacts are not documented. Degradation creates problems. The river meandering throughout the valley without the BSNP would create more impacts to infrastructure, water intakes, agriculture, and industry. There has been no demonstration of (a) bed degradation or (b) that bed degradation relates to an impact. It is a presumption that remains untested over time. The authors and the USACE presume bed degradation to be permanent and ongoing. There is no demonstration of such an impact. The authors and the USACE speculate. The dredgers do not concur with internal USACE determinations that have not been peer reviewed. For purposes of this document and evaluation, they	Text has been revised on page 1-14 of the Final EIS as suggested. Please see Section 3.4.6 for a description of the extent and potential causes of river bed degradation on the LOMR. Impacts from degradation are described in Chapter 3 for each resource area.

Table 10.3-1 Comment-Response Matrix

Comment ID[a]	Comment	Response
	represent bad science and only evidence, mostly circumstantial and speculative.	
43-030, 43-069, 43-075, 43-105, 43-A002, 43-A023, 44-001, 44-002, 86-003	Comments suggest that the river is either not degrading or is aggrading over different time periods and locations.	As described in Section 3.4.6.1 and 3.4.6.2, the river has both aggraded and degraded at different locations and at different times. Data are available from USGS monitoring stations on the LOMR dating back to the 1930s for several gages, and for shorter periods at other gages. HBED are available for most of the river from 1998, 2007, 2008 (partial), and 2009. The 1990-2005 CRP adjusted low-flow water surface elevation (Figure 3.4-20) shows widespread reductions in water surface elevations between those two periods; and the 1998 to 2007–2009 data show degradation over that period, particularly at several locations on the LOMR where dredging has occurred in the past (Figure 3.4-21). Average bed elevation changes at USGS gages are described in Section 3.4.6.2. Some USGS gage locations, including Kansas City, Waverly (slight increase), Boonville, and Hermann have shown some aggradation since 2005 based on average annual bed elevation estimates. The HBED between 2007 and 2009 also show increases in average bed elevations on the upper half of the LOMR and variable change on the lower half of the LOMR. The period from 2007 to 2009 had higher average annual flows than the period from 1998 to 2007 and also had less dredging on average than that period. Both of these factors likely affected bed elevations on a regional and local scale, respectively. Future river conditions are unpredictable. The river could continue to experience above-average flows and continue to aggrade in some reaches, or it could experience below-average flows and degradation even in areas that have recently been aggrading. Irrespective of river conditions, high-intensity dredging is likely to cause local river bed degradation, as shown in the new analysis in Section 3.4.6.3 and in Figures 3.4-32a and 3.4-32b of the Final EIS.
43-031	Page 2-47, paragraph 1. "…analyses to date show a strong correlation between the locations, time frames, and quantities of dredging in the LOMR and degradation of the river bed." – We do not concur. We believe the analysis is weak. We believe the analysis does not demonstrate the full range of water flow characteristics. We do not believe that it demonstrates a true cause as the Corps limits the ability of the river to receive sediment in flow in massive quantities. In addition, the BSNP robs the river of available material through the Corps-designed structures. There are other equally strong correlations, including	See additional analysis incorporated into Section 3.4.6.3, "Commercial Dredging," regarding dredging volumes and intensities in relationship to local bed degradation. The bed material load estimate includes periods of average flow and below-average flow, and annual estimates of bed material loads are based on the daily average flow that sums the variable flows throughout the year. A river bed degrades when more sediment leaves the system than is supplied to the system. That can occur if the sediment supply decreases but the river's sediment transport ability remains the same. It can also occur if the river's incoming sediment load remains the same but the river's sediment transport ability increases, or if sediment

Table 10.3-1 Comment-Response Matrix

Comment ID[a]	Comment	Response
	the number of registered vehicles, the number of hair dryers, the number of pennies in circulation, and our personal favorite, the number of USACE employees by office location. The analysis to date targets dredging. It is an answer seeking a question.	is removed from the river. When river velocities increase or sediment is removed by commercial dredging, the river has more energy than is required to carry the sediment it has and is in disequilibrium. The excess energy will erode sediment from the most easily eroded source. If the river banks are armored, as are the banks of the LOMR in many areas, then the excess energy will erode sediment from the river bed and from the mouths and banks of tributaries.
43-036	Page 2-52, first bullet point, Annual tonnage. The choice of tonnage is arbitrary and presumed bed degradation has a negative consequence.	The annual tonnage for Alternative A is based on an analysis of the bed material load, as described in Sections 2.4.1 and 3.4.
43-063	Page 3.2-12. "The USGS has preliminarily estimated that, for a 700-mile stretch of river, approximately 37 million tons of sediment per year and 562 million tons of sediment over 15 years could be released through ongoing and reasonably foreseeable restoration projects…." – This Draft EIS clearly establishes that substantial additional volume could be generated toward the river in order to support the pallid sturgeon with regard to its recovery. If 37 million tons of material were added per year by the Shallow-Water Habitat Program, 562 million tons over 15 years would result in a 457 million ton surplus over the temporal time frame of this EIS. A conclusion that a portion of this material will not support additional bed development is inconsistent with the data. At a minimum, these contributions would slow bed degradation and assist in sustaining a balance to support the current 7 million ton demand by the six existing dredgers. The persons with the most knowledge of size, fraction, and material on the river, the six existing commercial dredgers, do not concur with the conclusion reached by the authors that such projects are likely to be predominantly the wrong size fraction that is desirable for dredging. See Appendix A of this comment letter for analysis of the geomorphology of the river.	Construction of chute and shallow-water habitat and dike notching increase sediment discharge and loads on the LOMR. Some of that sediment could meet commercial dredging specifications. However, the USACE is conducting these restoration activities under the MRRP rather than for purposes of mitigating impacts from commercial dredging. Potential cumulative impacts on geomorphology associated with the MRRP are discussed in Section 5.3.2. The specific timing, location, and potential effects of sediment from restoration projects are beyond the scope of this EIS—particularly because the potential projects in Missouri are currently on hold as a result of opposition from the Missouri Clean Water Commission.
43-068	This section does not provide adequate citations to track the logic and methodology of the authors with regard to the geomorphology examination.	Citations were included for references and materials reviewed and cited in the EIS. A detailed description of the methods used in the geomorphic and sediment transport analysis is provided in Appendix A.
43-069	Comments suggest that the river is either not degrading or is aggrading over different time periods and locations.	Section 3.5 of the EIS describes the past and current status of infrastructure on the LOMR for the project area. The LOMR is a dynamic system; degradation and aggradation have occurred at different locations and over different time periods

Table 10.3-1 Comment-Response Matrix

Comment ID[a]	Comment	Response
		throughout the LOMR. Section 3.4 describes the past and present geomorphic configuration of the LOMR; specific information on degradation and aggradation is located in Section 3.4.6. Comment 43-030 specifically addresses questions regarding degradation and aggradation on the LOMR.
43-106	The Draft EIS states dredging causes bed degradation because of the volume of material removed from the LOMR. The same argument can be applied to the construction of dikes in the LOMR. Sediment is removed from the LOMR by deposition behind the dikes. The material captured from the sediment stream and deposited behind the dikes is estimated at approximately 1 billion tons. If the removal of sediment occurred over a period of 50 years, that would correspond to an average of 20 million tons per year. Sediment removed by commercial dredging is a fraction of the sediment removed from the main channel during the implementation and continuation of the BSNP. Numerous other conclusions can be made from the very same data presented by the authors.	The BSNP was authorized by Congress and implemented by the USACE to create a stable navigable waterway that is in dynamic equilibrium. "Dynamic equilibrium" refers to an open system in a steady state in which there is a continuous inflow and output of materials, and in which the form or character of the system remains unchanged. Such a stable channel would transport the water and sediment produced by its watershed in such a manner that the stream maintains its dimension, pattern, and profile without aggrading or degrading. River beds degrade when more sediment leaves the system than comes into the system. That can occur if the sediment supply decreases but the river's sediment moving ability remains the same. It can also occur if the river's incoming sediment load remains the same but the river's sediment moving ability increases, or if sediment is removed from the river. When river velocities increase or sediment is removed from the river (such as by commercial dredging), the river has more energy than is required to carry the sediment it has; it is in disequilibrium and known as "hungry." The excess energy will erode sediment from the most easily eroded source. If the river banks are armored, as are the banks of the LOMR in many areas, then the excess energy will erode sediment from the mouths and banks of tributaries or from the bed of the river itself. Bed degradation increases with the intensity of dredging that occurs at a given location on the river (please see new analysis in Section 3.4.6.3 and Figures 3.4-32a and 3.4-32b in the Final EIS). Dredging represents a direct removal of sediment from a system that tends toward dynamic equilibrium. If sediment is removed from a system that is in dynamic equilibrium under a given flow condition, erosion will occur. If excess sediment for a given flow is present, deposition will occur. The deposition of millions of tons of sediment behind the dikes represents sediment in excess of what the LOMR could transport and indicates that the LOMR, in general, was not sediment limited by mainstem dams or the BSNP during the period the BSNP was constructed. Also see General Response #1 immediately following this Comment-Response Matrix.
43-A004	Introduction page 1-15 states: "The Missouri River Bed Degradation Reconnaissance Study Report (Reconnaissance Study Report) (USACE 2009b) describes the many potential causes of river bed degradation (BD) and concludes that river BD in the. Kansas City reach and other reaches of the lower 498 miles of the Missouri River is the result of a combination of	The Missouri River Bed Degradation Reconnaissance Study Report (USACE 2009b) does in fact describe the many potential causes of river bed degradation and recognizes that river bed degradation in the Kansas City reach and other reaches of the lower 498 miles of the Missouri River is the result of a combination of causes. Analyses presented in the Draft EIS and additional analyses presented in Sections 3.4 and 4.2 and in Appendix A of the Final EIS demonstrate the effects of commercial dredging activities to

Table 10.3-1 Comment-Response Matrix

Comment ID[a]	Comment	Response
	causes. However, data collected over the last 15 years suggest that increased removal of river bed sediment by dredging, working in concert with the BSNP, has become the dominant cause of river BD (USACE 2009b)." Changes in the stream hydrograph (waterdata.usgs.gov) for the LOMR at Kansas City clearly show a reduction in -low flow rates and high flow rates during the aforementioned 15-year period. Therefore changes in bed elevations cannot be attributed directly to dredging activities.	river bed degradation, which is especially clear in areas of concentrated dredging.
43-A009	There are a number of errors in graphs and figures. Figure 3.4-24 shows Elevation and Stage. The stage is based upon an arbitrary datum, and in the Kansas City U.S. Geological Survey (USGS) gage, had a 10 ft shift in 1989 so stage cannot be used synonymously with elevation over time at the Kansas City USGS gage. Also, the figure has Stage (feet) and Elevation (feet) that do not agree in length, 28.0 ft on the Stage axis equals 29.6 ft on the Elevation axis. The USGS data for this location was downloaded from the USGS web site and plotted to reproduce Figure 3.4-24, the plot of the USGS data does not match Figure 3.4-20. The plotted average bed approximates the average bed in Figure 3.4-20 from 1980 to 1992. Deviations between the plotted average bed and Figure 3.4-20 occur from 1993 to present. The plotted flow rates do not match Figure 3.4-20. This raises questions as to the validity of the conclusions presented in the Draft EIS.	Plots were from USACE spreadsheets and reports (USACE 2007b), which were based on USGS gage data, as cited in the Draft EIS. Data supplied from the USACE are available from the USACE and are part of the administrative record. As described in Section 3.4.6.2 and as indicated on the graphs, the USGS changed how data were collected in the late 1990s, resulting in a potential shift in the results. Data are otherwise adjusted to the reference datum for each site. Figure 3.4-24 has a different scale on the two Y axes – one axis is for stage, the other axis is for elevation. While both are in units of feet, they do not need to have the same scale or baseline because they represent two different measurements (elevation and stage). The commenter asserts that their analysis using USGS data does not match the results in Figure 3.4-24 (we are assuming the commenter is referring to Figure 3.4-24 throughout this comment and that the reference to Figure 3.4-20 is in error). The commenter did not supply the data cited or plotted flow rates; therefore, no comparison to the commenter's analysis is possible.
43-A010	The USGS considers a 3% variation in flow rate the same number. When creating a new graph using the publicly available USGS data, a range of plus and minus 3% was used. Plotted data varied as much as 2.5 feet from the Fig 3.4-24. As with many items in the Draft EIS, reproduction of graphs and figures are not possible because methodologies were not given nor discussed.	Plots were from USACE spreadsheets based on USGS gage data, as cited in the Draft EIS. A 3-percent variation in flow rate may be considered within the error of measurement and represents an elevation variation on the order of 2.5 feet; however, of primary significance is the trend in bed elevation trends that is clearly downward in Figure 3.4-24, especially in recent years.
43-A014	Quantitative comparisons of data (bed elevations, sediment loads, flow rates, magnitude and frequency of food events) for the period prior to the Missouri River Mainstem Reservoir System to data collected' after completion of the Mainstem Reservoir System are inappropriate for predicting change in the BD.	Discussions of conditions prior to dam completion were included to give historical context for the Affected Environment section.

Table 10.3-1 Comment-Response Matrix

Comment ID[a]	Comment	Response
43-A015	The procedure of averaging the five equations given in Section 3.4 and Appendix A.4 for computing Bed Material Transport is not a standard analysis technique. The equations should be evaluated for their underlying assumptions and proper application and the equation best representing the physical properties of the LOMR should be used. If the intent is to define a range of reasonable Bed Material Transport values then a confidence interval analysis should be applied to the selected methodology.	A representative bed material load value was estimated by using a weighted average of the five equations with extra weight given to the SEMEP equation because it incorporated additional suspended sediment data from the LOMR (see Appendix A for details). A "standard analysis technique" for this analysis scenario was not available from the scientific literature. As described in Section 3.4.5.5 of the Draft EIS, all of the bed material load equations were appropriate for the LOMR. The range of results is presented in Table 3.4-18, with the details on limitations and assumptions presented in Appendix A.
43-A016	Section 2.4.2 states: "…estimates were made for two time periods, 2000-2009 (representing below average flow conditions) and 1994-2009 (representing average flow conditions)." Overlapping and inconsistent time frames raise questions as to the validity of the conclusions presented in the Draft EIS.	The time periods were selected based on data availability, flows, overlap with dredging data, and significant events such as the 1993 flood. The results are averaged over the two time periods and represent below-average flow conditions (2000–2009), and near-average flow conditions (1994–2009).
43-A017	Flow Duration Curves on the LOMR shown in Figure 3.4-11 show an increase in the annual probability of frequency of low flow rates of 20,000 cfs from 74% to 98%. Stream flow rates of 40,000 cfs increase in annual probability from 35% to 75%. The changes in flow rate frequency will have a pronounced impact on sediment transport volumes and composition. The changes in flow rate frequency have not been sufficiently addressed in the Draft EIS.	Please see General Response #1 immediately following this Comment-Response Matrix. When compared to historical flows, the increased flows have affected the geomorphology of the LOMR along with changes in sediment loads and channel configuration due to the BSNP. Since these changes have been in place since the completion of the Gavin's Point Dam in 1955 (with some changes in how releases are managed), the river has had time to adjust to the new flow regime. The BSNP was constructed and has been adjusted based on post-dam flows. The EIS analysis focuses on the portion of degradation caused by commercial dredging rather than analyzing the effects of all potential sources of degradation.
43-A018	Page 3.4-90 shows the "Evidence of Degradation Caused by Commercial Dredging" with no considerations given to velocities in the specific reaches or changes in the hydrograph for the years in question.	Modeled velocities and average daily flows were used to estimate average annual bed material load estimates. Other analyses that used HBED and low-flow water surface elevation data were limited to years with available data and were done at a river-wide scale. Effects of below-average flow conditions between 1999 and 2007 were considered.
43-A019	A visual inspection of the dredging volumes on Fig 3.4-30 shows BD upstream of the dredge and some show downstream BD. If BD were occurring from dredging activities, BD should be greater downstream of the dredging operations due to lack of sediment in the water column.	Degradation can occur both upstream and downstream of intensely dredged areas from headcutting and erosion, respectively (for more details, see Kondolf 1997). A more detailed analysis of localized bed degradation is included in Section 3.4.6.3, "Evidence of Degradation Caused by Commercial Dredging."
43-A020	Page 3.4-58 states: "…sediment load is a function of flows and flows vary overtime, comparisons of these data must consider the effects of flow variations over time." Yet no attempt is made to	The text was revised in the Final EIS to clarify meaning. The statement referenced on page 3.4-58 of the Draft EIS is to caution the reader when interpreting the tributary sediment data, which were provided to allow a general comparison between sediment

Table 10.3-1 Comment-Response Matrix

Comment ID[a]	Comment	Response
	statistically evaluate the frequency and magnitude of stream discharge associated with sediment transport. The quoted statement uses the ambiguous term "flow". We can assume the writer intends to describe changes in flow rate with time or it could be flow volume, velocity, etc,	loads on tributaries to sediment loads on the mainstem LOMR. As indicated in Table 3.4-17, the period of record for each tributary is variable and does not necessarily overlap with data from the mainstem. Therefore, caution must be used when comparing data from differing time periods because flows and sediment loads vary from year to year. "Flow" is a general term that is used interchangeably with "discharge." Where a more specific term was warranted, it was used.
43-A021	The use of CRP flow profiles are of little or no value to most readers outside of the Corps of Engineers, Attempts to reconstruct, verify or duplicate the CRP would be impractical and likely irrelevant.	Although the CRP is primarily used by the USACE for maintaining structures on the LOMR, the CRP provided additional data for analysis of the affected environment and provided a benchmark for normalizing low-flow water surface elevation profiles. Details on how the USACE develops the CRP are available from the USACE and are included in the administrative record.
43-A022	Stream bed depths were often measured around bridge piers. Local scour at the piers does not extrapolate to general BD.	Bore log data near bridge piers were cited in the Draft EIS because data were available at those locations. The Draft EIS indicates that the bed elevation change at these locations is likely influenced by localized scour. HBED and low-flow water surface elevation data, however, were not influenced by scour at bridge piers.
44-003	The Corps own Dredge Hole Study demonstrated that dredge holes do not erode upstream (headcut). Something other than dredging	The referenced study was a limited, short-term study that examined the rate at which depressions in the river bottom caused by dredging (holes) were refilled by bed load moving along the river bottom. Because it monitored only one dredging and recovery cycle it was not designed to show the effects of repeated and long-term dredging and therefore does not address whether dredge holes erode upstream over time.
44-008	From Page 3.4-96: "Up to two-thirds of the material dredged in some areas of the Kansas City segment is too fine to meet specifications for making concrete and is discharged back into the river. Consequently, the actual volume of material extracted from the river bed may be up to three times greater than the retained dredging volumes indicate." The amount of sand that must be wasted in the Kansas City reach has been overstated in the Draft EIS by a factor of 5:1 (12% vs. the stated 60–70%). See explanation below. Page A-12 Figure A-6 Representative Bed Material Particle Size Gradations at Missouri River Gaging Sites (2001–2009) Study of the plotted bed material gradations reveals the following: 1. Nebraska City gradation is as coarse as Hermann is. As Nebraska City is over 60 miles upstream of Rulo, how can you say that the bed material gets finer as you proceed upstream? This disproves that generalization from within the Draft EIS itself.	A number of issues are raised in this comment, including the primary comment that considerably less than two-thirds of the dredged material is returned to the river because it does not meet specifications. The two-thirds estimate was based on observations and comments made by Dredgers during a visit to operations in Fall 2009, an analysis of dredging locations in the Kansas City segment, and an analysis of the size distribution of river bed sediment. As indicated in Figure 3.4-16, the cumulative size frequency distribution of bed material in the Kansas City segment falls below the minimum specification for Missouri State Concrete sand. This indicates that, on average, the sediment is finer than the specifications for concrete sand, which is the primary product produced by dredgers. Although dredgers will seek deposits that most closely match the specifications that they require, dredgers that can sort material on the river can dredge any deposit and retain only the material that meets specifications. The estimate that up to two-thirds of the material is discharged back into the river reflects the ability of dredgers to dredge sub-optimal deposits. Dredging location records indicate that most non-restricted miles of the Kansas City segment have been dredged historically, which

Table 10.3-1 Comment-Response Matrix

Comment ID[a]	Comment	Response
	2. The KC gradation plotted in Fig. A-6 is only 12% from satisfying the Missouri Concrete specification (requiring wasting 12% of the minus 0.25 mm). This does not agree with the Draft EIS statements that in KC, only 30 to 40 percent of the sand dredged is saved and therefore 60 to 70 % is returned to the bottom. 3. The sand gradation in St. Joseph is up to 10% finer than the Kansas City gradation (yet there is no degradation issue in St. Joseph). While dredging, when finer sand is encountered, every attempt is made to save the sand and use it for products other than concrete sand. If it is not excessively fine, it can be used for commercial asphalt sand. Since we dry our sand enough to place individual piles on the barge, the finer piles are conveyed to stockpiles other than concrete sand. (This is another advantage to having on-board processing.) If the sand is excessively fine for more than a barge load or two we move the dredge to find coarser sand. …Page 4.2-12 " Short-term impacts in all segments under the Proposed Action would include a local decrease in sediment availability as the dredged area captures sediment transported by the river, and erosion occurs downriver as the river replaces the captured sediment. The amount of fine sediment in the water column would increase below the active dredge location as the dredging operation discharges unusable material back into the river." Again we say, the zero to 30% (averaging closer to 20%) sand we waste is not "fine" sand (defined as -0.25mm). It is medium sand – similar to the "average" bed material of 0.35mm. Our wasted sand is 0.25 to 0.6 mm. This size sand does not stay suspended in the water column. …4.2-13 Paragraph 1 "For example, up to two-thirds of the material dredged in some areas of the Kansas City segment is too fine to meet specifications for making concrete and is discharged back into the river. As a result, the actual volume of material extracted from the river bed may be three times greater than the dredging records indicate, increasing local impacts on sediment availability and coarse sediment." Again, this is an incorrect assumption. Why, because we don't dredge just anywhere in the river. We find areas that are naturally coarser because they are on the outside of bends and downstream of dikes. This is why we	indicates that sub-optimal areas have been dredged in addition to the "sweet spots." On average, material that is returned to the river is finer than the material retained; depending on flows, material returned to the river could remain entrained in the water column for some distance.

Table 10.3-1 Comment-Response Matrix

Comment ID[a]	Comment	Response
	travel up and down the River – finding those sweet spots. We cannot afford to waste that much production. However, this is exactly the situation in a land based pit in the floodplain. It is way too fine and the overburden is still there so the added costs are tremendous – over double the costs of river dredging. …Page 3.7-10-11 "Approximately 60–70 percent of all dredged sediment from the Kansas City and St. Joseph segments does not meet the required materials specifications and is discharged into the LOMR via the slurry water." As we have stated, this statement is not correct. Our waste averages about 20%. …Page 4.2-2, Para 4 "Because most of the commercially dredged material must meet detailed specifications, dredging operations return the material that is too fine or too coarse to the river. This results in an increase in fine sediment transported downriver as this fine material is discharged into the river from the dredging operation (Kondolf et al. 2002)." Bottom line: we do not waste more than 20% on the average and the size of the sand we waste is 0.25 to 0.40 mm. It was stated that the d50 of the bed material in KC is 0.35mm. In essence we are wasting the typical medium sand that there is an excess of in the river. This is necessary for a well graded concrete sand, that minimizes voids and cement.	
44-04	Major commercial dredging has been going on in KC since before the 1950's yet on Page 3.4-75, Paragraph 2, of the Draft EIS it states: "The rate of decline in average river bed elevation appears to have been relatively steady from 1955 until the 1993 flood event." Relatively steady means the river bottom at the KC gage on the Hannibal Bridge in downtown KC dropped 6 feet over 38 years (0.16 ft/year). Obviously the concern is how fast it drops, not that it is steadily dropping. But, whether there is dredging or not, the river bottom will continue to drop. This is the steady scour from the BSNP constricted channel.	Although there has been long-term river bed degradation in the Kansas City segment, the assertion that the channel will continue to drop in the absence of dredging due to the BSNP is not correct. In the absence of dredging, the bed will either become coarser to resist erosion or the slope will decline to a point where degradation ceases. See General Response #1 immediately following this Comment-Response Matrix for a more detailed description of geomorphic processes, and Section 3.4.6.3 for more details on how dredging affects bed degradation.
44-05	From Page A-62 Paragraph 2: "The reason for the decrease in bed material load between Kansas City and Hermann may be attributable to several factors. First, based on the hydraulic modeling results, the Hermann reach has lower flow velocities and boundary shear stresses at a given flow than the Kansas City reach, which results in lower sediment transport rates." Bottom	As described in Section 3.4.6.3, several factors are likely contributing to degradation in the Kansas City segment, including commercial dredging and BSNP structures. Higher bed material load transport due to higher velocities and shear stress relative to other locations does not necessarily mean an increase in degradation and scour; it depends on sediment availability, sediment size, and other factors. Please see General Response #1 immediately following this Comment-Response Matrix for more details.

Table 10.3-1 Comment-Response Matrix

Comment ID[a]	Comment	Response
	line: velocities and the resulting shear stresses in KC are too high and they are scouring too much sediment from the riverbed in KC.	
44-06, 44-12	Degradation is Reversing -Dike Modifications In 2004 and again in 2007 the Corps began to lower the sill dikes near KC. In addition, the drought ended and the bed is showing signs of some recovery near the KC gage. The sill dikes were specified to be 2 feet below 1973 CRP or underwater at normal navigation, but they have been 5 feet or more too high for possibly 20 years or more. The Corps even lowered them somewhat below their relative height, CRP minus 2 feet, for the first time. Now look at Figure 3.4-24 on page 3.4-75 and see how the degradation has reversed since then. Here is our explanation. Sill dike elevations corrected below CRP Elevation: low flows (navigation support releases) are supposed to stay within the narrow dike channel, keeping velocity up and removing sediment. Greater flows, normally occurring several times each year, are supposed to overtop the dikes and spread out, removing excess sediments behind the dikes and even depositing sediment in the channel. As soon as the river drops back within the dikes, it begins to scour and maintain the channel again. [For the first time that we can recall, the sill dikes above KC are now underwater at normal navigation stage.] However, when the sill dikes too high: normal raises are dammed up at each dike creating higher than intended stresses on the bed, creating excessive eddys and scouring, and actually depositing fines behind the dikes where it is not wanted. The only flows that top the dikes and drop out sediments in the channel are high water events. High water events don't happen every year. During the drought from 1999 to 2007, no raises probably ever topped the dikes and the river scoured all year for all those years. This is the period of the greatest degradation rates at the KC gage. The regular fill/scour cycles each year became only scouring. This higher stress concern were again described in the Draft EIS: From Page .4-87 Paragraph 2: "Consequently, stages for high-discharge events such as the 1993 flood have increased at all gage sites since the 1950s (USACE 2007c). Higher stages increase the shear stress on the river bed, and these higher stresses can result in river bed degradation and	As described in Section 3.4.6.3, several factors are likely contributing to bed degradation in the Kansas City segment, including commercial dredging and BSNP structures. In general, if the river bed degrades (and dike elevations remain the same), higher flows are directed into the navigation channel, increasing the likelihood of scour and degradation. The USACE has reduced the height of the dikes in the Kansas City segment twice since the year 2000 in response to degradation in the reach (see General Response #1 immediately following this Comment-Response Matrix). It is unclear how this has affected the apparent aggradation observed in the past 2 years, as indicated by the HBED analysis depicted in Figure 3.4-31 and in Figure 3.4-21. There appears to be little to no aggradation between 2007 and 2008 in the Kansas City segment and widespread aggradation upriver from the Waverly gage between 2007 and 2009. Since the aggradation is not confined to the times and locations where the dike modification occurred, it is more likely due to increased flows in the past few years in combination with reduced commercial dredging. The forthcoming Degradation Feasibility Study is focused on the causes of degradation in the Kansas City segment and throughout the Project area.

Table 10.3-1 Comment-Response Matrix

Comment ID[a]	Comment	Response
	increased sediment transport capacity during storm events" The 1993 flood is being described, but the same principal would apply to anything that increases stage or depth and shear stress on the river bed. In 2004 the Corps notched the dikes, but this did not adequately reduce excessive water depth and energy acting on the channel bottom. We are grateful to the Corps for taking further action in 2007. We believe it should be studied even further to determine if more modifications are required to keep the bed recovery going in all reaches, not just at the downtown gage.	
44-07	The Draft EIS has concluded that dredging is the cause of the greater degradation in KC because the sand is finer in the River near KC and dredging makes it even finer and increasing scouring of sediments. The Draft EIS points out geologic reasons and displays numerous sand gradation tests. RM 270 to 350 is the location of the wide river valley rock cut (see Figure 3.4-2). We would expect to find finer deposits in the flood plain in this reach. However, there is not necessarily any correlation between the gradation of the deposits in the flood plain and those in upper 30 feet of the modern day river channel. Even before the BSNP, the modern river flows were changing the deposits in the top 30 feet of the flood plain. Then the BSNP further classified sands the modern 600 foot navigation channel deposits, coarsening them even further. The theory that the modern river bed was for all time classified by the original rock cut and therefore finer upstream, has not been substantiated by dredging experience. We have done extensive core-drilling in the flood plain. It has proven highly variable deposits that were obviously classified by countless flooding since glacial times. If you look at Brian Kelly's (USGS) river cross sections in his Simulation of Ground Water Flow report, you will see that everywhere there was an actual drill hole there is a highly variable deposit. In between the drill hole locations the strata/deposits look very consistent and homogenous, going from coarse on the bottom to fine on the top. This is only a trend. In reality you will find that it is very often not the case where the substrate has been actually drilled and investigated. Looking again on Brian's cross	Observations on river bed sediment sizes were based on samples collected from the river bed throughout the LOMR. When plotted linearly, the plot shows that, on average, the D50 sediment size is smaller above RM 150 than below (Figures 3.4-16 and 3.4-17). The data and sediment size distribution are highly variable. A statistical analysis was not conducted; therefore, it has not been determined whether the size difference above and below RM 150 is statistically significant.

Table 10.3-1 Comment-Response Matrix

Comment ID[a]	Comment	Response
	sections, the more drill information, the more variable the strata seem to become. This is not a coincidence. It's a mixed bag! Also note the variability in the rock cut channel from one side to the other. The location of the modern river in the rock cut moves from side to side adding even more variability in the river bottom deposits. This is another reason why we move the dredge around for miles. We firmly contend that there is more variability in the river sand deposits from one bend to the other than there is generally from one reach to another. The wide rock cut = fine sand deposits in the River theory makes no sense anyway as the rock cut is actually narrow through the KC reach and widens in St. Joe and Waverly (where there is little degradation with respect to dredging). It's not the sand grain size that causes degradation; it's the velocity head forces acting on the river bottom. What about the sand gradations in the Draft EIS? Let's look more carefully at the data used in the Draft EIS to substantiate the "sand is finer upstream (and in KC)" theory. See Page A-7 Table A-1 Standard Deviations of the "Percent Finer Than" Values for the Particle Size Classes Used To Estimate the Average Gradation in Bed Material Cumulative Frequency Curves in Figures A-2 through A-5 (%). The variance in the % finer in the 0.5 and the 1.0 mm sizes from Nebraska City to St. Joe to KC to Hermann is exceeded by the statistical variances as shown in Table A-1 on page A-7 with a standard deviation of plus or minus 4 to 16%. The actual differences in the means (averages) are only 5 to 20% total. The pattern of change from the mean values is rendered "meaningless" by the variance in the data. What this does prove is there is a lot of variance in the gradation of the bed material at any location, just as much as from reach to reach.	
44-12	We strongly believe that degradation in dredge areas is an effect from inadequate sediment deposition resulting from overly aggressive BSNP scour. Naturally we have focused on the KC reach. See Page 3.4-88 "In particular, the Kansas City segment is more constrained than other segments of the LOMR. This is due to the extensive infrastructure in the Kansas City metropolitan area and	Please see the response to Comment 44-06 and General Response #1 immediately following this Comment-Response Matrix. The BSNP was acknowledged in the EIS as a potential contributor to degradation in the Kansas City reach, along with other factors such as increased flows and commercial dredging. Construction of the BSNP accounted for changes in flows and drainage areas to balance sediment loads and flows, as described in General Response #1 and in Section 3.4.3.2 of the Draft EIS. However, the system is dynamic; degradation and aggradation have occurred at different times and at

Table 10.3-1 Comment-Response Matrix

Comment ID[a]	Comment	Response
	the location of the Kansas River confluence. As stated in the 2009 USACE Reconnaissance Study Report: This set of river conditions has resulted in the installation of a very constrictive dike system to maintain a navigation channel. The construction of that dike system has resulted in a reach of river that is very efficient at "cleaning" and maintaining the low-flow channel (USACE 2009a)." This statement from the Draft EIS says it all, but somehow gets ignored in the other sections of the report when discussing the impacts of dredging. Entrix wouldn't come out and say it, but they lay it between the lines: Reducing dredging in KC to reduce degradation will not be of benefit unless the very constrictive dike system in KC is modified. Is the Channel Wide Enough? Page 3.4-28 Paragraph 5 "For example, the drainage area increases significantly (by 15 percent) between the St. Joseph and Kansas City gages where the Kansas and Platte Rivers join the Missouri River, resulting in a 19.9-percent increase in mean annual flow." Note that only 50 feet is added to the channel width from Rulo to the Kansas River confluence. This is only an increase of 10% (from 550' to 600' sill dike width) where the mean annual flow increased 19.9% (See Page 3.4.31 Figure 3.4-7 Cumulative Drainage Area and Mean Annual Flows for the Lower Missouri River). Dike heights (relative to the CRP) remain the same until below the Grand River. Would this not result in above normal energy from below the Platte River, to the Grand? It is also likely that the Platte River flows have increased with development in its corridor? What happens when the Kansas River does flood? See Table 3.4-9 Significant Tributaries to the Lower Missouri River Notice the potential for runoff from the Kansas River which dwarfs all other tributaries. Granted, there are numerous reservoirs, but then consider what happened in 1993 – essentially the Kansas reservoirs overflowed created the flooding on the Kansas River rather than reducing it. We witnessed the Missouri River flowing upstream at the Kansas River confluence upstream of downtown Kansas City. That is the magnitude of the energy – the River was essentially dammed-up upstream of downtown by the floodwaters of the Kansas River. Even though the bed recovered half of what was lost in the flood that still represents a huge amount of material	different locations for different reasons, as described in Section 3.4.6 of the EIS. While other potential causes of degradation are considered by the EIS, the focus is on potential impacts from commercial dredging, which is the activity under consideration in the EIS.

Table 10.3-1 Comment-Response Matrix

Comment ID[a]	Comment	Response
	that had to relocate from somewhere upstream (headcut). We believe this accounts for much of the degradation at RM 380. We are convinced that this event coupled with the ensuing drought (see above: Degradation is Reversing) and to an unknown extent, the Corps' dredged fill for the L385 Levee, resulted in a huge net loss of sediment upstream of Kansas City which has migrated to mile 380. Mix in the extra velocity below the Platte River and the reach will not fully recover until the velocities are reduced. See Page 3.4.31 Figure 3.4-7 Cumulative Drainage Area and Mean Annual Flows for the Lower Missouri River Note the greatest increase in drainage area and the 19.9% increase in flows (between St. Joe and KC). Does it seem logical that there is no adjustment to the dike Structure Height Criteria in this reach until below the Grand River? The sill dike heights are designed to be low enough to allow medium to high flows to spread out bank to bank, reducing water depth and scouring energy. But what happens if the sill dikes are too high, not allowing medium to high flows to spread out. We believe greater depth of flow, greater energy on the bottom and greater scour. We strongly recommend that before dredging is reduced below what is currently needed, areas of degradation should be modeled to analyze the velocities at various flows to see if modifications to the BSNP structures are needed to restore the bed. (If the velocities are too great, the reach will never recover regardless of the amount of sediment reporting there.) (Note: In 2004 and 2007 the Corps did some major notching and then lowering of the dikes upstream of KC and that will help tremendously. Unfortunately this has failed to be factored into the Draft EIS. It should be.) Page 3.4-35 Figure 3.4-11 Flow Duration Curves on the Missouri River Measured at Kansas City, Missouri Notice how the low flows have increased: 20kcfs from 72% to 98% of the time 40kcfs increased 35% 60kcfs increased 24% This is the same thing we told the Corps in 1985 concerning degradation on the Kansas River after the reservoirs were constructed. Low and high flows have been replaced with medium flows. On the Kansas River this brings the riverbanks down, on the Missouri River it brings the channel bottom down. No one listened on the Kansas River because what could be done, take out the dams? The Missouri	

Table 10.3-1 Comment-Response Matrix

Comment ID[a]	Comment	Response
	River is different in that the dikes can be adjusted. Page 3.4-37 Figure 3.4-13 Mean Daily Discharge and Annual Flow Peaks Measured on the Missouri River at Kansas City, Missouri (1929–2008) Look at the graph of flows over the years. Sit back and look at the white area under all the curves. Notice how the white area greatly increases as you move to the right. This increase in area below the lines is the increased occurrence of low to medium flows. These are the flows that cause degradation day in and day out. 3.4-46 Paragraph 3 "However, the sandy river bottom likely contributes sediment in degrading reaches, as do tributaries that undergo headcutting as a result of degradation in the main river channel." Why wouldn't a tributary which is often discharging relatively cleaner water in turn erode the Missouri River bed at the outfall? Page 3.4-87 Pre-Flood Average Bed Elevation Post-Flood Average Bed Elevation Figure 3.4-28 River Bed Elevations Based on Hydraulic Depth before and after the 1993 Flood at the Kansas City Gage "Consequently, stages for high-discharge events such as the 1993 flood have increased at all gage sites since the 1950s (USACE 2007c). Higher stages increase the shear stress on the river bed, and these higher stresses can result in river bed degradation and increased sediment transport capacity during storm events."[bolding added] This indicates that the dikes had been too high prior to that time (1993) in order for accretion to have occurred behind the dikes. Normal raises should have topped the dikes and removed the sediments. Entrix points out that the plotted bed elevations in Fig. 3.4-28 show the river healed after the 1993 flood from an initial cut of 9 feet (707 down to 698) to a permanent drop of 2 feet (back to 705). We don't know how far upstream the cut of 9 feet went, but this could definitely account for degradation increasing upstream as 7 feet of sediments refilled downtown. These sediments came from somewhere.	
44-16	Page 3.4-90 Evidence of Degradation Caused by Commercial Dredging Correlation does not prove causation. Commercial sand dredging is too valuable an industry to be regulated based on	The EIS was completed using the best information available at the time the EIS was prepared. Since completion of the Draft EIS, additional analysis has shown a statistically significant relationship between dredging and local bed degradation (See

Table 10.3-1 Comment-Response Matrix

Comment ID[a]	Comment	Response
	correlations. There is really no need to even attempt to use correlations to prove that dredging causes degradation. Common sense tells us that dredging tons should not exceed bed load tons. If they did, then that would be some proof of degradation. However, if dredging is less than bed load ton movement through a degrading reach, you have to look elsewhere, at dikes and the velocities. All this points to the need for completion of the Degradation Study before finalizing dredge permit limits. Bottom line: first data and then analysis is needed rather than an assemblage of correlations.	Section 3.4.6.3 and Appendix A in the Final EIS for details). As discussed in General Response #1 (immediately following this Comment-Response Matrix), even while the amount dredged in a segment may be less than the bed material load, it may cause bed degradation as the river seeks to transport sediment at its full sediment transport capacity by removing bed material. When the results of the Degradation Feasibility Study become available, they may be considered in addition to monitoring data (Section 6.3) during the next permitting reevaluation cycle.
44-17	Figure 3.4-32 Correlation between Dredging and Changes in Stage at 40,000 cfs for Gages on the Lower Missouri River (2000–2005) The cumulative tons don't make sense – they seem too high: 6 years dredging in KC = 23 million tons?	Please see the revised analysis regarding dredging intensity and local bed degradation in Section 3.4.6.3 of the Final EIS.
44-18	Page 3.4-93 Paragraph 2 "The bed material load is composed of sediment that is on average smaller in size than the material removed from the river bed by dredging" This generalization is incorrect. The bed load size is dependent on the location in the river and the velocities acting on it. We dredge where we find coarser than average bed material. Those areas exist and we repeatedly dredge them as do other dredgers in their respective reaches. Obviously for them to fill originally or repeatedly, the bed material load must be refilling them to our satisfaction. You are assuming that we dredge everywhere with no regard to the varying sand size found in different areas. The following is true if you wish to make an accurate statement: The bed load material is composed of sediment that is on average somewhat smaller in size (0.25 mm smaller) than the average material found in the river bed. (However that average material is too fine to make concrete sand from efficiently.)	The comment is consistent with the finding in the EIS. As illustrated in Figure 3.4-16, the bed material at the Kansas City and St. Joseph USGS gages is finer than the Missouri State specifications for concrete sand, which is the material typically retained by dredging operations. For more detail, see Section 3.4.5.4, "Bed Material Particle Size."
44-20	Page 3.4-89 "Dredging levels generally increased to a peak in 2002, at 8.7 million tons per year. Figure 3.2-3 shows dredging levels by river mile for dredging that has occurred in the last 10 years." We believe this includes 1.7 million L385 tons and that should be noted here….Page 3.4-91 Figure 3.4-30 Cumulative Dredging and Changes in the CRP-Adjusted Low- Flow Water	Text was added to Section 3.4.5.4 in the Final EIS. Some generalizations were made in the EIS in order to describe the entire approximately 500-mile Project area. As the commenter notes, the river system is complex and heterogeneous at the local level. Although the same location can be dredged repeatedly, it fills with new material deposited from upstream. If glacial material is mined from the river bed, it will be replaced with material in active transport. In the case of the long-term degradation in the

Table 10.3-1 Comment-Response Matrix

Comment ID[a]	Comment	Response
	Profile between 1990 and 2005. Page 3.4-90 Note that the intensive and concentrated L385 dredging is included on the tons dredged curve, making the curves and the entire correlation inadmissible - as contract dredging was a separate authorized activity and is not the purpose of the commercial dredge permit. For example: if one were drafting a Draft EIS on commercial air traffic noise impacts in order to evaluate the re-licensing of a commercial airport, would you include the noise from the air traffic from the nearby military base? Well that has been done here when you include L385 dredged tons. Just like the noise from airplanes, it's impossible to separate impacts from commercial dredging and government contract dredging in the same reach. Conclusion: Throw out Figure 3.4-30 – it can't be used in the correlation as it includes impacts from other dredging projects.	Kansas City segment, glacial deposits have been removed over time by erosion or dredging. See Section 3.4.6.3, "Mining Glacial Deposits," for more detail.
44-21	"The combination of less aggressive dredging techniques with a more resistant geological layer in the St. Charles segment may reduce rates of bed degradation from commercial dredging in that segment." Again, what is dredged or not dredged 15 to 30 feet below the surface of the river bottom has no bearing on the erosion of the surface of the river bottom. Gravel, clay and cobbles are not encountered anywhere near the surface of the river bottom, but are deep below the river bottom. In KC, we also stop dredging when we hit hardpan. Our continuous chain type cutter is more of a traveling screen than a chain saw (at a top speed of only 30 fpm). It bounces on hardpan and we have no incentive to dredge hardpan and damage our expensive chain.	The USACE believes that subsurface geologic and sediment conditions do have a bearing on the erosion and geomorphic conditions in the LOMR. The most obvious example of this is where resistant bedrock or consolidated sediments act as resistant layers, controlling erosion and channel shape at locations within the river. While subsurface conditions below the actively mobilized sediment layer may be unaffected during lower flow conditions, during high flow and flood conditions, the sediment may be mobilized to a greater depth. During such conditions, instability of the deeper sediments caused by dredging may well become important to sediment transport and river bed degradation. Cutter-head dredges have been prohibited by the USACE in some dredging operations to avoid this potential.
44-30	Page 4.2-5 Paragraph 3 "Tributary degradation is most likely to occur in areas of concentrated dredging, where river bed degradation and reductions in low-flow water surface elevations are expected to occur as a result of dredging. Table 4.2-1 lists the tributaries by river segment in the areas where existing dredging has been concentrated. These tributaries are at greatest risk of degradation under alternatives where lowflow water surface elevations are expected to decline as a result of dredging in those areas." This comment is correlation based and should never be worded the way it is. The Osage, the Grand and the Platte Rivers all have degradation but no dredging near them. If you are going	Text in the Final EIS has been changed to read: "Tributary degradation is most likely to occur where river bed degradation and reductions in low-flow water surface elevations are expected to occur. Table 4.2-1 lists the tributaries by river segment in the areas where existing dredging has been concentrated. These tributaries are at greatest risk of degradation under alternatives where low-flow water surface elevations are expected to decline as a result of dredging in those areas."

Table 10.3-1 Comment-Response Matrix

Comment ID[a]	Comment	Response
	to use a correlation then it needs to apply "across the board". A correct statement would be: tributary degradation occurs when the outfall elevation of the tributary lowers. The study has identified other causes of degradation (cutoffs, headcuts, and confluences) that we have direct evidence of. Any clear water discharge is going to erode directly below it as sediments are picked up. This is an established fact. The contribution from commercial dredging is inconclusive at best. Dredging has been restricted from the areas at least 1000 feet upstream and down from tributaries. The Little Blue no-dredge zone extends 4490 feet, Line Creek 3700 feet, Kansas River 4000 feet. Tributaries themselves flood and erode and contribute to their own instability. Undermining of the structures on the tributaries could be attributed to improper design and construction which can in itself cause erosion below the structure. (This was the case on Line Creek where the footings were built atop the mud from the 1993 flood fill. (Engineers told us later that they knew there would be problems with it from the beginning.) The only dredging that occurred within 3700 feet of Line Creek was the L385 dredging which was a huge concentrated dredging project immediately upstream of the Creek. But somehow commercial dredging has become the cause.	
44-32	One comment asks why, if the CRP was continuously being adjusted downward after 1990 and the flood of 1993, were the dikes not adjusted downward along with the CRP in order to maintain design flow elevations between the dikes?	The CRP elevations were developed in 1973 and updated in 1982, 1990, 2002, 2005, and 2010. Comparison of the 1973 and 1990 CRP in the Kansas City reach shows that the 1990 CRP is lower than the 1973 CRP between RM 352 and RM 373, with a maximum difference of 1.6 feet, and is essentially the same outside those river miles. Comparison of the 1974 and 1990 water surface profiles shows a similar divergence but of less magnitude. By contrast, the 2002 CRP and 2002 water surface profiles show significant degradation compared to the 1990 CRP and 1990 water surface profiles, respectively. Therefore, the degradation in the Kansas City reach was not an established trend until 2002. The dikes were lowered in 2004 and 2007. Water surface profiles since 2002 show a significant downward trend until 2006, minor recovery above RM 368 after 2006, and minor degradation or stability below RM 368 after 2006.
44-33	Page 4.2-8, Section 4.2.3.1 Changes in Sediment Loads and River Bed Composition "Dredging generally removes the bed material load-sized sediment and returns the finer sediment and the coarser gravel and cobbles to the river." The D50 for most of the River fluctuates between 0.3 and 0.5 mm. A look at the	Between approximately RM 500 and RM 140, the average D50 of the bed sediment ranges between approximately 0.25 and 0.60 mm. Below approximately RM 140, both variability in particle size and the size of particles increase, resulting in a bed D50 range of approximately 0.28 to 1.0 mm. As the commenter suggests, the particle size distribution within each reach of the river is highly variable, and the D50 in the Hermann

Table 10.3-1 Comment-Response Matrix

Comment ID[a]	Comment	Response
	variability in Figure 3.4-17 shows that there is a trend, but the greatest variance is within each reach of the river, not between reaches. There are areas in Hermann finer than Kansas City. The only accurate conclusion: there are areas in Hermann that are coarser than the coarsest in KC.	area can be coarser than the average D50 in the Kansas City area of the LOMR. Text was added to Section 3.4.5.4, "Sediment Particle Sizes and Transport Mechanisms – Bed Material Particle Size," in the Final EIS to reflect the variability of particle sizes at any given location on the river.
44-34	Flow Conditions Page 4.2-11 Paragraph 2 "Although they can measurably affect river bed elevations, extreme flood or drought scenarios were not considered in the analysis because they cannot be accurately predicted." This is contradictory with the selected data years of 2000-2009 which mostly overlap the drought years of 1999 to 2007 which were the most extreme of recent times.	The period from 1999 to 2007 does represent below average flows but is not likely to include an extreme event that may occur every 100–500 years. The impact analysis assessed impacts based on the assumption that flows would continue at below-average levels similar to what occurred between 1999 and 2007 as a worst-case scenario.
44-35	Page 4.2-22 Kansas City Segment "Under the No Action Alternative, the Kansas City segment likely would experience slight to moderate aggradation in the short term and moderate to substantial aggradation in the long term. Other factors likely to influence the amount of aggradation in this segment include the BSNP structures in the segment that effectively scour the navigation channel and reduce deposition of new sediment; flow modification from upstream dams that increase moderate flows and eliminate the lowest pre-dam flows from the annual hydrograph; and the Kansas River, which contributes flows but likely has reduced sediment delivery due to dredging and dams. These factors reduce deposition of sediment in this segment and may limit aggradation or recovery of the river bed in this segment Finally the bottom line: "These factors reduce deposition of sediment in this segment…" There it is in a nutshell. Even with the No Action (no dredging) Alternative, there will be no change in the degradation in KC. The excessive velocities and scour shear stresses in the upstream KC reach will not allow "deposition of new sediment". It doesn't matter if there is a headcut, a cutoff, levee dredging, or flood scour, there is no redeposition of sediments if the velocity is excessive (2.73 fps in Kansas City versus 1.8 fps at Waverly and 1.66 fps at Hermann all measured at 20,000 cfs - source USGS). When we have a high flow and the river spreads out above the dike elevation material is deposited. Unfortunately, as soon as the river levels drop within the dike	As the Draft EIS states, the Kansas City segment will likely experience slight to moderate aggradation in the short term under the No Action Alternative and moderate to substantial aggradation in the long term. The rate of aggradation, or bed elevation increase, would likely be influenced by current river conditions such as the BSNP, flow management, and sediment regime changes.

Table 10.3-1 Comment-Response Matrix

Comment ID[a]	Comment	Response
	width the sediments placed in high water are lost downstream where the velocity is normal (evidenced downstream of KC). Once the Corps is adequately motivated and authorized to fix this problem in KC and likely all other degrading reaches, the degradation will be over and will recover quickly. This will not occur as long as it is assumed that dredging is the problem!	
44-38	Page 4.2-2 Para 3 "Erosion of the river bed occurs both upriver as a headcut and downriver from the dredging depression, as the river entrains sediment to replenish its transport capacity (Kondolf 1997; Simons, Li, and Associates 1985; Rinaldi, Wyzga, and Surian 2005)." We do not agree that a dredge hole headcuts in the MO River (see below) Absence of Headcutting – 2007 Dredge Hole Survey* We have included with our comments profile cross-sections of the Corps' multi-beam Dredge Hole Survey that demonstrates that there is NO HEADCUT and only a slight downstream sediment pickup related to the dredge hole. You can see that most of the tailings, sand and oversize gravel go right back in the dredge hole, but occupy a small portion of the total sand made back in. The absence of a headcut flies in the face of conventional transport theory. But there it is – look for yourself – no trace of a headcut. Sediment carrying rivers are evidently nothing like clear streams and defy traditional transport theories. The moving bed creates entirely different phenomena on the river bottom. ...Conclusions from the April 2007 KC Dredge Hole Survey: • The dredge hole fills in quickly • Most dredge tailings are returned to the dredge hole • The dredge hole itself does not erode or grow once dredging is completed • There is no evidence of a headcut upstream • There is evidence of some minor erosion occurring immediately downstream (within 1000 feet) of the dredge hole, but at a fraction of the amount dredged [Two humps, at Sta 2+50 and 4+00 are of unknown origin. We had not operated in that vicinity prior to this dredge hole. The humps were probably sand as they disappeared when the flows increased to 79.2Kcfs.]	The 2007 Dredge Hole Survey Study was reviewed and cited in the EIS. Although headcutting did not result from the dredging studied in the 2007 survey, the study represents only two individual case studies. There is some evidence that degradation upstream of concentrated dredging in the Kansas City segment is the result of a headcut. Headcutting as a result of dredging is described in general in Kondolf 1997, and in detail in Simons, Li, and Associates 1985 for the Kansas River.

Table 10.3-1 Comment-Response Matrix

Comment ID[a]	Comment	Response
44-40b	Page 2-60 Table 2.6-1 Summary of Impacts of the Proposed Action and Alternatives This rote exercise in tabulation is flawed and should be completely redone because of the following errors: 2. Draft EIS assumes that degradation will cease/reverse with reduced dredging.	Commercial dredging has exacerbated local bed degradation in areas with intense dredging (see Section 3.4.6.3, "Commercial Dredging"). In general, if dredging intensity is reduced or dredging is eliminated, the local river bed is likely to recover over time. In some areas where long-term degradation has been occurring, other factors such as the BSNP may affect the rate and extent of recovery.
44-41	We propose to: 1. Survey and monitor the riverbed in and beyond our dredging reach. All benchmark elevations should be checked prior so more accurate water surface and riverbed elevations and therefore slopes can be determined. 2. Use ADCP to measure actual channel bottom velocities at the cross section locations throughout the dredge reach. With this data modeling can be done on the bottom of the river. 3. Facilitate complete multi-beam dredge hole surveys in various reaches and flows to gather precise data that can be used to model the exact impacts from dredging. The rate of dredge hole fill is real data that will more accurately determine the bed load rather than using theories and samplers that only approximate it. (See the attached data and our evaluation from the Corps' April 2007 Dredge Hole Survey in Kansas City.) 4. Monitor the percentage of waste along with tons removed to approximate total tons dredged. With this information we can begin to fully understand what happening in the river bed. Again, we strongly urge the Corps to maintain the status quo by reverting back to the 2009 permit levels until all this data can be collected and evaluated. The Draft EIS is inconclusive as it is with regard to degradation.	See additional analysis in Section 3.4.6.3, "Commercial Dredging," for an updated analysis on dredging and local bed elevation change. Detailed recommendations for monitoring were considered for the revised section "Monitoring and Adaptive Management Framework" (Section 6.3 in the Final EIS). Additional studies such as the one described will provide useful data for monitoring and adaptive management purposes.
44-55	Page 4-3, Paragraph 1 "Adverse and beneficial impacts to a particular environmental resource (e.g., aquatic resources) were identified based on the direct impacts of dredging and indirect effects that are generally manifested through changes in the river channel geometry and water elevations, as compared to the baseline. Indirect impacts were based largely on the projected changes in the river channel based on the results of the geomorphic analysis." The premise that dredging can significantly impact bed and water level should only be listed as a "Key Assumption", as there is no	See revisions to Section 3.4.6.3, "Commercial Dredging," in the Final EIS for an updated analysis on dredging and local bed elevation change. The impacts analysis focuses on the potential additional contribution of dredging on bed elevation and other geomorphic change as opposed to all factors potentially affecting bed elevations and channel geometry.

Table 10.3-1 Comment-Response Matrix

Comment ID[a]	Comment	Response
	real geomorphic analysis determining its level of indirect effects through channel morphology compared to other stated causes of degradation, i.e. the BSNP (which was designed for that purpose –bed material scour - and has been highly successful – especially in Kansas City above the Kansas River - considering the almost complete absence of channel maintenance dredging required). The absence of anything more than correlations showing that where there is dredging there is degradation (and therefore the opposite is true – where there is degradation, there is dredging – ridiculous, yes, but that is all a correlation proves, coincidental occurrence) and the misunderstanding that dredging in the Kansas City reach involves much more wasted fine sand than anywhere else in the river, which causes increased degradation.	
44-57	Page 4.2-2 Para 4 "Consequently, rows of coarse material can form on the river bottom as the dredge moves up and down the river. Bed sediment also can become coarser below dredging operations as finer material is picked up by the river to replenish what was deposited in the dredging depression (Kondolf 1997; Rinaldi, Wyzga, and Surian 2005)." The attached Dredge Hole Survey shows that the oversize rock (1.5" to 6") is dropped back in the dredge hole and there was no evidence of any humps when completed.	Coarse material that does not meet specifications is returned to the river. Depending on the configuration of the dredge (the dredge head can be located some distance from where material is returned to the river) and the direction of movement of the dredge, material could be returned to the dredge hole as the commenter suggests, or it could be deposited on the riverbed outside of the dredge hole. Material that is deposited on the riverbed can form piles of coarse material on the riverbed, and material that is deposited back in the dredge hole will tend to increase the concentration of coarse material in the hole.
50-001	3.2-10 "The CWCP attempts to mirror the pre-dam annual flow cycle…." Fails to put naturalization of the CWCP into perspective. It would be more accurate to state : "The CWCP attempts to restore some elements of natural variability of the pre-dam annual flow cycle by instituting pulsed flows in the spring. In approximately one out of every three years, the March pulse is designed to achieve as much as the 11th percentile of the pre-dam pulse magnitude and the May pulse is designed to achieve the 6-10th percentile of the pre-dam pulse magnitude (Jacobson and Galat, 2008)".	Text on page 3.2-10 has been updated in the Final EIS.
50-002	3.2-12 "In the short term, the amount …." It would be more accurate to state: "The amount of sediment released from any particular restoration site would be small relative to current suspended sediment load over the duration of construction. The	Section 3.2.6.1 in the Final EIS has been amended to include this information.

Table 10.3-1 Comment-Response Matrix

Comment ID[a]	Comment	Response
	total sediment added to river from all sites over the projected 15-year time period of construction would be greater, as much as 62% of the current suspended-sediment load, but would be a transient pulse, diminishing after construction as the sites equilibrate to the prevailing sediment load of the river (Jacobson and others, 2009a)."	
50-003	3.4-39 "Spring pulse releases…. as Hermann, Missouri (USACE, 2009b)." Should be cross checked with Corps presentations that indicate that the flow pulses will attenuate to immeasurably small levels downstream of the Kansas River (Roy McAllister, I believe). Moreover, pulse-related stage changes downstream of the Kansas River been minimized operationally by decreasing flows from Kansas reservoirs. These observations/facts would help up the pulses in perspective.	Text on page 3.4-21 in the Final EIS has been modified.
50-004	3.4-53 Supply limitation: Data presented in appendix A and reported by Jacobson and others (2009) show that total suspended sediment and suspended sand increase with increasing discharge. This indicates that sediment supply does not limit transport. Leveling off of the transport curves or would support supply limitations; this isn't evident in the data. I agree that most of the suspended load is wash load and that the percent sand does not show a systematic increase with discharge; I do not agree with the interpretation that the lack of increase indicates supply limitation – or at least this argument has not been supported sufficiently. The lack of relation may simply mean that the particle size distribution of the available sediment does not change with discharge. A-13 See comments from page 3.4-53 about whether the case has been adequately argued that sand percentages indicate supply limitations.	Text on page 3.4-54 in the Final EIS has been modified.
50-005	3.4-64 "…lie within a reasonable range of each other." First, I think the preparers of this report did a state-of-the-art job of estimating bed-material loads. Using a variety of available models is entirely appropriate to provide some measure of variance. This statement asserts that the variation in results in reasonable, which is a fairly subjective concept. It would be useful to present variance in terms of percent difference ("the L-385 report estimates bed material	Text on page 3.4-6 in the Final EIS has been modified.

Table 10.3-1 Comment-Response Matrix

Comment ID[a]	Comment	Response
	load only 33% higher than this report") and to cite, if possible, other studies or standards for what level of agreement would be expected, hence reasonable.	
50-006	3.4-65 The annual bedload flux cited from Gaeuman and Jacobson (2007) is in metric tons, so should convert to 6.9 million (short) tons.	Text was revised in the Final EIS in response to the comment.
50-007	3.4-95 For dune dimensions, you can cite a peer-reviewed report with many systematic observations (Elliott and others, 2009). Table 8 provides summary data for Miami, Missouri (near Waverly). The text states: "In the Miami reach, characteristic dunes varied in height for all of the surveys from 0.52–1.45 m (fig. 22, table 8). Dune length varied from 5.04–38.7 m. " p. 43.	Text on page 3.4-101 in the Final EIS has been modified.
50-021	A-3 In the general discussion/definition of washload and bed-material load it would be useful to clarify that all of the analysis is on a cross-sectional average basis, essentially a 1-dimensional hydraulic view of the river. The 1-dimensional view is reasonable for the scale of the broad questions about bed stability and relates directly to streambed elevation and water-surface elevation data. The 1- dimensional view does not, however, describe what happens within a reach where lateral variation in sediment transport, erosion, and deposition determine reach-scale channel morphology and habitat. Hence, the D10 and Rouse number criteria for the transport modes may be valid on a cross section averaged basis, but does not describe lateral variation that results in habitat. Particles that are transported in suspension in the thalweg may be transported in traction (bedload) on the inside bend. And, of course, turbulent bursts and sweeps produce at great deal of variability at finer temporal and spatial scales. Generally: a caveat here about limitations of the 1-d approach would delineate uncertainties and demonstrate rationale for adaptive management.	Text on page A-2 of Appendix A in the Draft EIS has been modified in the Final EIS.
50-022	A-6 Last paragraph: important to note that "The maximum particle size measured for the USGS data…."	Text on page A-6 of Appendix A in the Draft EIS has been modified in the Final EIS.

Table 10.3-1 Comment-Response Matrix

Comment ID[a]	Comment	Response
50-023	A-43 Inherent limitations of 1-d models. Large scour holes associated with every wing dikes (see, for example, maps in (Reuter and others, 2008)) attest to complex 3-dimensional sediment transport processes associated with flows through, over, and around navigation structures. Unstable sandbars between navigation structures attest to sediment transport, erosion, and deposition processes within the dike complexes. These observations indicate that the assumption about bed-material transport being limited to the navigation channel are not completely valid, especially as they relate to maintenance of marginal habitats. It is not clear, however, whether the assumption is unwarranted relative to understanding total fluxes.	Text on page A-43 of Appendix A in the Draft EIS has been modified in the Final EIS.
50-024	A-67+ Section A.4.3. The rationale for a weighted average of modeled bed-material load (and the proportional weight given to SEMEP) is not well explained. I would agree that SEMEP is different and potentially a more valid representation – but I would not know how to weight it relative to the others. Also: Under predictions of bed-material loads in SEMEP relative others at Hermann is notable (table A- 16). Speculation on what is happening in the Hermann reach (pp. A-81-82) could include bed armoring (apparently not taken into account sufficiently in SEMEP (?), probably due to coarse sediment introduced from Osage and Gasconade rivers), and increased dominance of wash load (due to influxes of fine sediments and agricultural land uses in Chariton/Grand rivers).	Comment noted. Text has added on page A-82 of Appendix A in the Final EIS.
51-001	I have witness the U.S. Army Corps of Engineers Dredging down river from the mouth of the Missouri River because of all the sediment. Where did it all come from?	Localized impacts may result from dredging even with a “surplus” of sediment in other areas due to the size and complexity of sediment transport on the LOMR. See General Response #1 (immediately following this Comment-Response Matrix) and the response to comment 39-002.
51-002	Please look at more than the last recent years. There was a drought involved and if you do a scope of say the last 50 years you will see a different picture. Dredging has been done in Hermann as far back as I can remember with no complaints.	Although the analysis in the Draft EIS focuses on recent trends, the full record was considered in the impacts analysis. Some records included data back to the 1930s.

Table 10.3-1 Comment-Response Matrix

Comment ID[a]	Comment	Response
Comment Category: Infrastructure		
03-018	Given the number of flood control levees along the lower river, we recommend that the Corps provide a characterization of the lower river levee system and the risk potential (toe integrity, certification standard, protection levels of 25 to 500 years) of those levees placed along the three reaches with the highest amount of bed loss.	The November 5, 2009 memorandum summarized the information available at the time of a request for an additional permit extension. In summary, the Kansas City's 7 Levees Project conducted a reliability analysis of all federal flood control projects within the Kansas City reach and found (under existing conditions) minimum weaknesses/deficiencies in the system. The Kansas City's 7 Levees Project did not address the Missouri River bed degradation scenarios, with one exception – the Lower Fairfax Unit. ED-GD MFR (an internal USACE memo) dated December 3, 2008, identifies two additional units impacted by channel degradation (East Bottoms and North Kansas City). The level of effort and results in the aforementioned MFR were qualitative and did not define uncertainties and reliabilities of those units. However, sufficient information existed as a result of these assessments to make recommendations at the time the memo was prepared. Qualitative evaluation of these three areas of concern were also incorporated into the Missouri River Bed Degradation Reconnaissance Study, in that this was part of the supporting information used in determining that sufficient evidence existed to support the USACE participation in a cost-shared Feasibility Study. The Feasibility Study will address river bed degradation and its effects on the short-term and long-term stability of the federal flood risk management systems within the lower 498 miles of the Missouri River. The Feasibility Study's purpose is to ensure continued flood protection for areas currently protected by federal flood control systems. At the completion of this study, the USACE would have a better understanding of the expected performance and reliability of the federal flood control systems and non-federal infrastructure.
04-014	Page 2-18, Infrastructure - It is not clear in this section if Alternative B is being compared to the No Action, Alternative A, Alternative B, Alternative C, or Proposed Action. The final EIS should clarify this.	There is no description of infrastructure on Page 2-18 of the Draft EIS. However in a paragraph on infrastructure found on page 2-81 of the Draft EIS, reference is made to changes in infrastructure costs. As with all other descriptions of impacts, these impacts reflect change from the existing conditions described in Chapter 3 for each resource including infrastructure.
04-017	Page 3.2-10, last paragraph. This would also be an appropriate section to note that bed degradation in the lower river can affect the releases, both total amount and rate, from the upstream dams to meet water supply needs.	A description of the relationship between water surface elevations and water withdrawal for municipal and industrial supplies is found in Sections 3.5 and 4.3.
04-018, 04-025	Several commenters' recommend that the EIS include an evaluation of effects to the City of Columbia's well field in McCain.	Horizontal collector wells potentially could be impacted by dredging through direct contact of the dredge with a lateral well arm, removal of a portion of the coarse sand that

Table 10.3-1 Comment-Response Matrix

Comment ID[a]	Comment	Response
		provides natural filtration of the river water extracted by the well, and replacement of that coarse sand with finer silts and clays that could reduce the rate that water could be pumped. Because the City of Columbia obtains its water supply from a system of conventional vertical wells drawing water from the alluvium beneath the LOMR floodplain rather than from horizontal wells drawing water from directly beneath the Missouri River, river bed degradation would not directly affect the City's system. Consequently, conventional well fields—including but not limited to the well field of the City of Columbia at the McBaine Bottoms—were not included in the analysis of impacts to water supply wells in the EIS. The potential effects of dredging on water quality are discussed in Sections 3.7 and 4.5. The following link directs you to the 2009 Columbia Water and Light Water Quality Report: http://www.gocolumbiamo.com/WaterandLight/Water/WaterQualityReport.php
06-005, 06-016, 44-24	Several commenters' recommend that the EIS needs to provide a comprehensive and quantitative analysis of risk to infrastructure.	The investigation into changing river bed elevations and changes in low and high water surface elevations was based on analytical data available from studies prepared by the USACE, including the Missouri River Bed Degradation Reconnaissance Study (2009) and the report Missouri River Degradation and Causes (Lower 498 River Miles) for Committee on Missouri River Recovery and Associated Sediment Management Issues (2009). The USACE acknowledges the need for a comprehensive monitoring program to detect and monitor threats to existing infrastructure from ongoing river bed degradation.
06-014	Section 4.3 – Infrastructure -The Department recommends that the Draft EIS includes an analysis of potential impacts to contaminated sites located along the lower Missouri River that may be impacted by dredging.	The Draft EIS includes an analysis of potential impacts to contaminated sites located along the LOMR that may be affected by dredging. Section 3.7.3.5, "Sediment Quality and Toxicity" includes a general description of the presences of contaminated sediments in the LOMR and the potential for dredging to disturb those sediments. The text in this section states that "Current dredging operations disturb sediments and the associated pore water, some of which may contain contaminants. The LOMR is a large river with a high potential for mixing and dispersion (USACE 1990); therefore, most elevated levels of contaminants due to dredging would quickly return to background levels." In addition, Section 3.7.3.6, "Metals," provides a general description of metal concentrations in the LOMR. The text in this section stated "Ongoing dredging operations disturb sediment and pore water that may contain elevated metal concentrations. The USGS study in Omaha, Nebraska suggests that, even if metal-contaminated pore water is released, waters would not be sufficiently toxic to exceed USEPA toxicity thresholds."

Table 10.3-1 Comment-Response Matrix

Comment ID[a]	Comment	Response
06-015	Section 4.3 – Infrastructure -Potential threats to facilities that are located immediately adjacent to the Missouri River should be evaluated.	The EIS analyzed the potential effects on existing infrastructure located immediately adjacent to the Missouri River. The primary focus was the potential effects of river bed degradation and changes in water surface elevations on man-made structures located in the channel cross section.
13-001, 30-007, 30-012, 32-002, 34-001, 90-002	Several commenters' suggest the EIS underestimates the cost to modify intake structures and pumps.	Text in sections 4.3.3.2, 4.3.6.2, and 4.3.7.2 has been revised in the Final EIS to reflect updated information on costs provided by representatives of the Missouri American Water Co, City of St. Louis, and WaterOne.
15-001	One of the City of Independence wells is a horizontal collector well whose arms collect water from beneath the Missouri River at approximately River Mile 353.5. This well produces 6,940 gallons per minute which accounts for a significant percentage of the water we provide to our customers… We would respectfully request that a no-dredge zone be created 2,000 feet upstream and 2,000 feet downstream from our well at River Mile 353.5 to reduce possible impact to this well.	The text in Sections 3.5.4.3, 4.3.3.3, 4.3.5.3, 4.3.6.3, and 4.3.7.3 has been revised in the Final EIS to include updated information on the City of Independence's horizontal well at RM 353.5. The Final EIS has identified an Environmentally Preferred Alternative that would allow a level of dredging and associated restrictions that are anticipated to result in no more than slight river bed degradation in the near term and long term. The EIS also has concluded that the existing permit conditions provide dredging exclusion zones that adequately protect water intakes from water quality issues. The Final EIS does not, however, determine what will or will not be permitted. That decision will be based on the Environmentally Preferred Alternative with modifications determined through the permit evaluation process required by Section 404(b)(1) of the CWA. The factors considered (including these public comments) and conclusions reached in that process will be described in the ROD that will be published no sooner than 30 days following publication of this Final EIS.
18-001, 18-005, 18-006, 18-007, 18-008, 30-002, 30-003, 89-004	Several commenters' recommend increasing the No-Dredge Zone to protect water supply and infrastructure.	Dredging could potentially affect water supply intakes and through bed degradation and suspended sediment and contaminants. These potential impacts are fully discussed in Sections 4.02 and 4.05. This EIS describes the anticipated consequences of the Proposed Action and alternatives and identifies the Environmentally Preferred Alternative that balances the various public interests including the need for aggregate and the need for a stable water supply. The Final EIS has identified an Environmentally Preferred Alternative that would allow a level of dredging and associated restrictions that are anticipated to result in no more than slight bed degradation in the near and long term. The EIS has also concluded that the existing permit conditions provide dredging exclusion zones that adequately protect water intakes from water quality issues. The Final EIS does not, however, determine what will or will not be permitted. That decision will be based on the Environmentally Preferred Alternative but with modifications determined through the permit evaluation process required by Section 404(b)(1) of the

Table 10.3-1 Comment-Response Matrix

Comment ID[a]	Comment	Response
		CWA. The factors considered (including these public comments) and conclusions reached in that process will be described in the ROD that will be published no sooner than 30 days following publication of this Final EIS.
18-003	The lowering water levels reduce the saturated thickness in the aquifer which will reduce the capacity of your horizontal collector wells. As you are aware, these wells are the only raw water source for the Nearman Water Treatment Plant which serves over 145,000 residents in Kansas City, Kansas and Wyandotte County. In addition, the lower river levels caused by streambed degradation will lower the submergence on the Nearman Power Plant's raw water pumps at the power plant intake which will increase operational costs and reduce the capacity of the pumps. If levels drop below the intake ports, the cooling water supply may not be functional and the power plant may have to shut down, as has been the concern this winter due to the extremely low levels on the Missouri River.	Comment acknowledged. The information in this comment was taken into consideration during preparation of the Draft EIS (see Section 4.3.3.3 and response to Comment 18-001).
30-004	WaterOne believes the proposed extraction rate for The Master's Dredging Company, Inc. is far too high for the 7 mile reach from Mile 383 to 390. WaterOne's new Horizontal Collector Well is located in the reach and WaterOne has plans for 3 more of these wells in its Master Plan.	Comment acknowledged. Mitigation measures described in Chanter 6 related to dredging intensity are designed to reduce localized dredging impacts and river bed degradation. This information was further considered in development of the Environmentally Preferred Alternative.
30-009	Pg 4.3-11 Kansas City segment from RM 391 to RM 357 clearly includes the WaterOne Horizontal Collector Well and narrowly misses the Independence Wellfield. Dredging restrictions should apply to these locations as well as the ones listed….Page 4.3-40 - Alternate C, Impacts to Water Supply Wells, Sl. Joseph and Kansas City Segments	These comments have been addressed in the Final EIS; appropriate corrections have been made. This EIS describes the anticipated consequences of the Proposed Action and alternative actions, and identifies the Environmentally Preferred Alternative. However, it does not determine what will or will not be permitted. That decision is reached through the permit evaluation process required by Section 404(b)(1) of the CWA. The factors considered (including these public comments) and conclusions reached in that process will be described in the ROD that will be published no sooner than 30 days following publication of this Final EIS.
30-010, 30-008	Pg 4.3-22 No mention is made of the bridge, pipeline and cable crossings near the mouths of tributaries where headcutting can and will occur.	The potential impact on infrastructure located on tributaries to the LOMR was considered in the EIS, but the assessment was limited by the lack of data for tributaries. The likelihood that tributary degradation would increase under an alternative was based on the change in low-flow water surface elevations on the mainstem LOMR occurring near the tributary, as estimated in the geomorphology analysis. In general, low-flow water surface elevations would need to decrease a “moderate” or “substantial” amount before tributary headcutting would occur and existing infrastructure would be affected. This

Table 10.3-1 Comment-Response Matrix

Comment ID[a]	Comment	Response
		information was further considered in development of the Environmentally Preferred Alternative in order to limit degradation to "slight" and substantially reduce the potential impacts to tributaries.
30-011	Pg 4.3-36 As in comment 30-009 there are other wells, not mentioned in this discussion….Page 4.3-40 - Alternate C, Impacts to Water Supply Wells, Sl. Joseph and Kansas City Segments	Text in Sections 4.3.3.3, 4.3.5.3, 4.3.6.3, and 4.3.7.3 have been revised in the Final EIS.
32-004	The EIS failed to identify several critical utility water sources including the new WaterOne Horizontal Collector Well and the City of Independence Well Field.	Text in Sections 3.5.4.2, 4.3.3.3, 4.3.5.3, 4.3.6.3, and 4.3.7.3 have been revised in the Final EIS to include updated information on WaterOne's horizontal collector well at RM 385.5. Text in Sections 3.5.4.3, 4.3.3.3, 4.3.5.3, 4.3.6.3, and 4.3.7.3 have been revised in the Final EIS to include updated information on the City of Independence's horizontal well at RM 353.5.
43-052	Page 2-79, paragraph 1, Land Use and Recreation/Wetlands, Floodplains, and Terrestrial Ecology/Federally Listed Species. "…alternate sources of sand and gravel are developed in the long term to offset losses of production for the LOMR…." – Development of pit mines behind levee areas in levee districts will result in increased risk of failure that must be presented inside the scope of this document. Increased risk of failure as a result of pits behind levees was well documented in 1993.	Siting and development of open-pit mines near existing levees would require acquisition of permits, including a review of the mine development plan by any adjacent levee district. Such reviews should identify any potential mine development conflicts and resolve them as part of the permitting process.
43-078	This section presumes that these enterprises are given an entitlement to the status quo and are not required to make adjustments or replace facilities over a given life expectancy. This is a fatal flaw in the analysis and fails to take into account the fact that at any time the BSNP can be eliminated by a simple act of Congress or its provisions modified by the Corps.	The intent of Congress was, and the effect of the BSNP has been, to stabilize the LOMR so that the river could be more readily used for navigation, water supply, and various other uses. The water intake structures were generally designed to accommodate the river surface fluctuations expected to occur on the LOMR at the time of construction. However, river bed degradation was never expected to occur when these water intake structures were designed.
43-081, 43-108, 43-163, 44-46	Several commenters' suggest that funding the cost to repair infrastructure on the river is inappropriate unless there is a direct effect from the proposed project.	The EIS concluded that dredging is one of several factors causing river bed degradation in the LOMR but did not determine how much of the degradation was caused by each of the contributing factors. Dredging and public water supply are only two of the various uses of that public resource known as the Missouri River. It may not be within the purview of the USACE to require the Dredgers to pay for economic losses or expenses experienced by LOMR water users due to river bed degradation or to require the water users to compensate the Dredgers for economic losses associated with dredging restrictions needed to protect water supplies. This EIS describes the anticipated consequences of the Proposed Action and alternatives and identifies an Environmentally Preferred Alternative that balances the various public interests, including the need for

Table 10.3-1 Comment-Response Matrix

Comment ID[a]	Comment	Response
		aggregate and the need for a stable water supply. The Final EIS has identified an Environmentally Preferred Alternative that would allow a level of dredging with associated restrictions that are anticipated to result in no more than slight bed degradation in the near term and long term. The Final EIS does not, however, determine what will or will not be permitted. That decision will be based on the Environmentally Preferred Alternative with modifications determined through the permit evaluation process required by Section 404(b)(1) of the CWA. The factors considered (including these public comments) and conclusions reached in that process will be described in the ROD that will be published no sooner than 30 days following publication of this Final EIS.
43-109	Page 4.3-1, paragraph 2. "Water suppliers and electric utilities commented that declining low water levels from ongoing dredging has compromised the performance of water intakes that provide cooling and process water to several electric generating stations." – There is no citation to the location of the commenter.	Citations have been added to Section 4.3.1 in the Final EIS.
43-110	Page 4.3-2, bullet point six, "Wharf and dock facilities." – No dredgers were interviewed regarding their docks and facilities on this issue. The cumulative sand plants may represent the greatest number of large docking facilities on the river.	The Project team did make field reconnaissance inspections of the Hermann Sand & Gravel, Inc. facilities at Hermann and Jefferson City; the Capital Sand Company, Inc. facility at Rocheport; the Holliday Sand & Gravel Company, L.L.C. facility at Riverside; and the Limited Leasing facility near St. Charles. In addition, in a data request (dated 28 August, 2009), the Dredgers were asked to provide a description of all docks, piers or other shoreline facilities used by vessels associated with a shore terminal facility for off loading and processing dredged material, maintenance, and lay-up or short term moorage.
44-23	Table 3.5-12 Wharf and Dock Facilities – Kansas City Segment "Holliday Sand and Gravel Co. Sand and gravel unloading dock 386.2 Holliday Sand and Gravel Co. Sand and gravel unloading dock 378.3" Holliday Sand does not have unloading docks at either of the locations noted above. Instead, Holliday's unloading dock at RM 371.8 needs to be added.	Text in Section 3.5.4.2, Table 3.5-12, and text in Section 4.3.3.7 have been revised in the Final EIS to reflect the updated information. Figure 2.2-1 showing the location of sand plants has also been updated in the Final EIS.
44-25	Page 3.5-19 paragraph 1: "The existing condition of the river bed at RM 370.1, near the Charles B. Wheeler Downtown Airport, is estimated to have dropped 24 feet, resulting in loss of rock fill toe protection at one storm sewer outlet." From when to when? This has traditionally been the site of a very deep hole since the 1980's, prior to any dredging in the area. Check out old	The degradation at RM 370.1 is indicated by the difference between current bed elevations and the bed elevations shown on the as-built drawings of the Broadway Extension reconstructed after it was destroyed in the 1950 flood. Neither the Degradation Reconnaissance Study or this EIS concludes that dredging is the sole cause of the degradation at this location but did identify this as a critical location that could be further jeopardized by excessive dredging.

Table 10.3-1 Comment-Response Matrix

Comment ID[a]	Comment	Response
	hydrographs.	At RM 370, the river curves around the levee-protected airport in a comparatively tight bend. Bed elevations on the outside of the bend are lower than surrounding bed elevations because of the higher velocities on the outside of the bend. Data from the USGS gage at RM 366 indicates a long-term bed elevation decline of approximately 15 feet since the early 1940s. Based on the 1990–2005 CRP adjusted low-flow data, the bed has dropped a maximum of approximately 7 feet in the vicinity of RM 370. Dredging has occurred at RM 370 and peaked in 2001, based on data from 1998 to 2009. The geomorphic analysis in the EIS was conducted on a scale to address potential geomorphic changes at a segment scale rather than at specific sites. The forthcoming Degradation Feasibility Study will include a more detailed analysis of site-specific degradation.
44-26	Page 3.5-19 Fairfax-Jersey Levee Unit "Analysis of the existing river bed condition at RM 367.8 indicates that a drop of 20 feet in the river bed already has occurred and is threatening a slide in the riverside bank (USACE 2009a)." We have not dredged below 368.2, some 2000 feet above the Unit. The RM 367.8 location noted with the threatened riverbank slide is only 1500 feet upstream of what we could call "ground zero" or the mouth of the Kansas River which enters on the sharpest bend in the River, a 1600 foot radius above a 160 degree curve just below the Levee Unit. It should be stated that this is not a dredging zone and it is in an unstable location – the headcut of the Kansas River. Instead, by omission it implies that dredging has caused this scouring. Good news, the dikes can be lowered and shortened in this reach as there are no property issues across the River if they were shortened and some bank was lost. What are we waiting for?	Given the complexities of the river configuration in the Kansas City segment, multiple factors likely contribute to the degradation observed at RM 367.8, including BSNP structures, floods, changes in flows, and commercial dredging. Although dredging has not been concentrated from RM 366 to RM 368 over the past decade, extensive dredging has occurred immediately upstream and downstream of this area at RM 365 and RM 369. As described in Section 4.2.2.2, river bed degradation can occur upriver and downriver from dredged areas.
44-27	Page 3.5-20 Bank Stabilization and Navigation Project Facilities "The Kansas City reach has required installation of additional dikes to manage the sediment load from the Kansas River." It is our experience and observation that no sediment is coming out of the KS River except in flood events. Have the dikes been modified since completion of KS River dams, as they have eliminated most events that moved sand through the KS River? If not, they should be to reduce velocities that are no longer needed. We are not aware of any maintenance dredging needing to be done at the mouth of the Kansas River, which in itself is a no-dredge zone.	Although sediment loads have been reduced due to upstream impoundments, the Kansas River remains a significant contributor of sediment to the LOMR (See Table 3.4-17). As described in Section 3.4.6.3, the USACE has installed a dike system to maintain the navigation channel. The dike heights in the Kansas City segment have been adjusted twice since 2000, primarily in response to changes in channel bottom elevations and changes in the CRP (see Section 3.4.6.1 for details on the CRP).

Table 10.3-1 Comment-Response Matrix

Comment ID[a]	Comment	Response
44-28	Page 3.5-20 Bridge, Pipeline, and Cable Crossings It was not explained what the impacts would be on bridge piers that extend to bedrock. Obviously the bridge pier itself creates significant scour. Do any bridges across the Missouri River not have piers extending to bedrock? What is the expected life of pipelines placed 6 feet deep in sand? Since the River has been uniformly degrading 0.16' feet a year for over 40 years it would be 38 years before they are uncovered (at the KC gage degradation rate). What maintenance has been done (we recall that some has been done). It should be noted here that no dredging occurs within 500 feet upstream or downstream of a pipeline or bridge pier, and that this requirement has never been questioned, or changed. What is the point of this list of infrastructure if there is no dialogue on the potential for impacts from dredging (cost of maintenance or replacement).	The potential impacts from the Proposed Action on bridge piers located within the five river segments were analyzed in the Draft EIS, as described in Section 4.3.3.6. Similar descriptions for Alternatives A, B, and C were presented in Sections 4.3.5.6, 4.3.6.6, and 4.3.7.6, respectively. The types of bridge pier foundations present in each river segment, and their respective condition, are described in Section 3.5 (to the degree information was available). All major bridges identified in the Draft EIS are founded on bedrock or other competent material. Regarding the expected life of pipelines buried in sand, an estimate of expected life would depend on site-specific conditions. As stated in Section 3.5.2.5 "Pipelines and underwater cable crossings rely on relatively consistent river bed elevations to provide adequate cover to subsurface infrastructure. Pipeline and underwater cable crossings that become exposed are susceptible to damage from debris flows and vessel anchors. Exposed pipelines can also be at risk of failure due to buoyancy effects."
44-29	Page 3.5-21 Wharf and Dock Facilities It appears that this list is very old and many of these facilities are no longer in existence. Without any up to date data on the condition and status of these docks and whether there has been degradation impacts, what benefit is this to decision making concerning commercial dredging?	Section 3.5.3, "Availability of Data" acknowledges that most of the commercial/industrial wharves and dock facilities originally identified in the USACE navigation charts have been abandoned due to lack of use. A description of potential impacts to these facilities was included in the Draft EIS to provide an indication of the potential effect on these facilities, should their use increase in the future.
89-001	Kansas City, Missouri, has seen river levels decrease over 82 years and have seen significant decreases over the past ten years. Kansas City, Missouri, Water Services Department has made five modifications to its intake facilities in order to compensate for low water in the river at a price of over $6 million. In section 4.3.3.2, impact to water intake facilities, it states that major investments to making modifications to existing facilities or new construction can be passed on to the taxpayers. Kansas City, Missouri, rate payers will be seeing significant rate increases to fund the $2.5 billion combined sanitary sewer system overflow control project program. Additional modifications to waste water treatment plants are being undertaken in response to new disinfection regulations, which will be paid through increased rates. Thirdly, Kansas City's rate payers are also being asked with upgrading its aging infrastructure. Expecting tax payers to allow	Text in Section 4.3.3.2 has been revised in the Final EIS to reflect updated information on costs incurred by the Kansas City, Missouri Water Department to upgrade water intakes within the Kansas City segment. The information was presented at the August 26, 2010 Information Meeting on the Missouri River Dredging EIS. The Final EIS has identified an Environmentally Preferred Alternative that would allow a level of dredging with associated restrictions that are anticipated to result in no more than slight river bed degradation in the near term and long term. The Final EIS does not, however, determine what will or will not be permitted. That decision will be based on the Environmentally Preferred Alternative with modifications determined through the permit evaluation process required by Section 404(b)(1) of the CWA. The factors considered (including these public comments) and conclusions reached in that process will be described in the ROD that will be published no sooner than 30 days following publication of this Final EIS.

Table 10.3-1 Comment-Response Matrix

Comment ID[a]	Comment	Response
	rates to increase because the dredging industry wishes to take more products from the river for profit will not be easily received by the public.	
89-002	In the winter of 2003-2004, the river level got to 714.3 feet USGS, which is minus 7.96 feet Kansas City datum gauge level at a flow of 16,000 CFS. Under the Kansas City segment, section 4.3.3.2, it states that segments from RM391 to RM357 could experience between two and four feet of river bed degradation in the next five years. Translating this to our datum, this would mean Kansas City would be at risk of not being able to draw from the river with any pumps except two, 30 million gallon a day auxiliary pumps. The combination of these pumps and our wells will not supply all of Kansas City, Missouri's customers need with water. The minimum flow from the intake during winter conditions is 110 million gallons a day. Fourteen million gallons a day is returned to the river as sedimentation flushing. The U.S. Army Corps of Engineers would have to increase their releases from Gavin's Point to an additional - 9,000 CFS to 21,000 CFS from the 12,000 CFS to provide a river level of no less than 714.3 feet USGS for Kansas City to safely draw water from the river.	Text in Section 4.3.3.2 has been revised in the Final EIS to describe the risks of continued degradation on the ability of the Kansas City, Missouri Water Department to meet the water demands of its customers. This information was presented at the August 26, 2010 Information Meeting on the Missouri River Dredging EIS. The Final EIS has identified an Environmentally Preferred Alternative that would allow a level of dredging with associated restrictions that are anticipated to result in no more than slight river bed degradation in the near term and long term. The Final EIS does not, however, determine what will or will not be permitted. That decision will be based on the Environmentally Preferred Alternative with modifications determined through the permit evaluation process required by Section 404(b)(1) of the CWA. The factors considered (including these public comments) and conclusions reached in that process will be described in the ROD that will be published no sooner than 30 days following publication of this Final EIS.
89-003	In Section 4.3.3, impact to water supply wells, Kansas City segment, the Draft EIS fails to discuss the impact to other water utilities that use wells along the river in this segment. Other water utilities including but not limited to independents, Gladstone, North Kansas City, and Parkville have wells located along the river.	The analysis of impacts on water supply wells in the EIS focuses on the potential effects of river bed degradation on horizontal wells located below the Missouri River. The Gladstone, North Kansas City, and Parkville systems use conventional vertical wells that draw water from the alluvial aquifers in the adjacent floodplain and do not use horizontal wells. These vertical wells would not be affected by river bed degradation and thus did not need to be included in the EIS. .
89-006	If the Kansas City, Missouri, Water Department was unable to supply adequate water to its customers, the result in economic loss could translate to $90 million a day or more.	Comment acknowledged.
90-001	The report doesn't address our new horizontal collector well in the Wolcott area. It's in the Kansas City reach and should be considered for the potential impacts to it by dredging activities.	Text in Sections 3.5.4.2 and 4.3.3.3, 4.3.5.3, 4.3.6.3, and 4.3.7.3 has been revised in the Final EIS to include updated information on WaterOne's horizontal collector well at RM 385.5.

Table 10.3-1 Comment-Response Matrix

Comment ID[a]	Comment	Response
Comment Category: Navigation and Transportation		
02-002, 05-005, 21-006, 43-049, 43-056, 43-059, 43-060, 43-061, 43-086, 43089, 44-047, 43-151, 43-148	Various comments concerned the relationship of dredging to navigation. Several commenters stated that the Draft EIS fails to adequately address all the adverse impacts that any reduction in dredging would have on navigation. Some comments stated that reducing dredging would lead or contribute to the demise of river navigation by barges and increase truck traffic. Other comments expressed the idea that commercial dredging is needed to maintain adequate depth of the navigation channel. Several comments point out that navigation is the primary Authorized Purpose of the LOMR und the 1944 Flood Control Act and argue that dredging is navigation and an authorized use of the LOMR. These comments also indicate that the Draft EIS downgrades or fails to consider the congressionally Authorized Purposes under the 1944 Flood Control Act in its assessment of the potential environmental impacts.	It is correct to say that navigation of the LOMR is a primary authorized purpose of the 1944 Flood Control Act. Transporting the extracted aggregate from the proposed dredging activities to their sand plants has comprised approximately 85 percent of commodities transported on the LOMR in recent years. The Final EIS recognizes the congressionally authorized purposes and considers impacts related to these purposes throughout the document. The Final EIS specifically addressed the consequences of the proposed and alternative actions on navigation that are directly associated with dredging. The Draft EIS also addressed the potential consequences of dredging on the navigability of the LOMR by other users. The actual extraction of aggregate is a form of mining rather than navigation. Mining is not a congressionally authorized purpose of the LOMR under the 1944 Flood Control Act and is granted no special consideration. Additionally, the 1944 Flood Control Act does not exempt activities that may affect navigation from the NEPA and CWA public interest review. Concerning the claim that commercial dredging is needed to maintain the depth of the navigation channel, the BSNP is designed to maintain a stable navigation channel. Dredging is not normally necessary to maintain the LOMR navigation channel.
06-017	Section 4.4 – Table 4.4.2 The value shown under Alternative C for Estimated Tons Delivered Per Day in the Kansas City Segment Total row is incorrect. It is not a valid number.	The value in Table 4.4-2 has been corrected in the Final EIS.
43-082	FHWA and MoDOT, after the release of this Draft EIS, have recently designated the Missouri River as Marine Highway 70 in anticipation of increasing volume of traffic on the river.	Text in Section 3.6.2.1 has been revised in the Final EIS to include information on the U.S. Department of Transportation Marine Highway Program and Marine Highway 70.
43-114	Page 4.4-5, paragraph 1. "There are numerous abandoned sunken barges and other vessels and large objects in the Missouri River (USACE 1991a, 1991b; Wheeler pers. comm. 2010)." – No captain of any tug or vessel owned or operated by the applicants was interviewed for their opinions regarding operations on the river. Page 4.4-5, paragraph 1. "…the shelves may become more exposed (Chapman pers. comm. 2010, USCG 2009)." – Mr. Chapman's experience operating tugs on the river is nominal. No captain of any tug or vessel owned or operated by the applicants was interviewed for their opinions regarding operations on the	USACE Contractor Staff participated in field visits to dredging operations, including travel via a tug and tug/barge combination on the river. During this field reconnaissance, the tug operator was interviewed. In addition, the USACE has responsibility for maintenance of the navigation channel, including charting of obstructions.

Table 10.3-1 Comment-Response Matrix

Comment ID[a]	Comment	Response
	river. Page 4.4-5, paragraph 2. The entire paragraph is speculative and relies on anecdotal information. No person involved in the drafting of this section has extensive time navigating the river or would they qualify as a deckhand on one of the tugs. They have limited knowledge of the river and the operational requirements of tugs and barges.	
43-115	Page 4.4-5, paragraph 1. "…near the Charles B. Wheeler Downtown Airport (RM 368). This area becomes impassable during periods of low water (Wheeler pers. comm. 2010)." – The USACE was advised that additional water being provided during the summer low flow period would address numerous navigational issues regarding compliance with the 9-foot deep channel requirement.	Comment noted.
43-116	Page 4.4-6. In this section, the calculations of traffic projections are not sufficiently detailed or consistent with MoDOT, KDOT, or FHWA standards. The traffic analyses throughout the document do not represent detailed models that would be employed by MoDOT, KDOT, or FHWA in the analysis for road building purposes.	The comment states that the calculations of traffic projections presented in the Draft EIS are not sufficiently detailed and are not consistent with MoDOT, KDOT, or FHWA standards. The traffic analyses throughout the document do not represent detailed models that would be used by the MoDOT, KDOT, or FHWA in an analysis for road-building purposes. As explained in response to Comment 06-022, the transportation-cost model is based on straight-line distances between supply and demand nodes and is not route specific. Consequently, it is not possible to calculate traffic projections by roadway, which would require estimating levels of service.
43-117	Page 4.4-6. "…originate from the Master's-Waldron sand plant." – Master's volume should be deleted from the analysis or a sub analysis developed based only upon existing dredgers.	The USACE has received 11 permit applications from eight companies to dredge sand and gravel from selected locations between RM 0.0 and RM 447.7 on the LOMR for commercial uses. The USACE considered the all of the applications together in the EIS. See the response to comment 43-008.
44-36, 44-52	4.4-2 Paragraph 1 "This estimate assumes an average truck capacity of 20 tons and 216 delivery days per year." Entrix has failed to consider the commercial zone around KC on the Missouri side. This is a huge factor in the delivery of sand in KC. The commercial zone allows loads in excess of 30 tons depending on the axle configuration and tare weight of the truck. These loads greatly reduce the cost and increase the efficiency of delivering sand within the commercial zone. Most of the alternate sources cited in the DEIS are outside the commercial zone and are restricted to approximately 20 tons. The existing sand pits within the commercial zones have a limited supply depending on their	Comment noted. Because the destination of the trips may or may not have been in the commercial zone, it was not possible to determine which portion of all trips would operate at the higher tonnage limit. Rather than make an arbitrary assumption about the allocation of trips at different load limits, a single load limit assumption of 20 tons per trip was used.

Table 10.3-1 Comment-Response Matrix

Comment ID[a]	Comment	Response
	sales. New pits will be outside the commercial zone. More truckloads, more miles to market, you can see the trend.	
44-37, 44-40h	Page 4.4-6 4.4.3.3 Changes in Truck Traffic. The changes in truck traffic are flawed. Entrix oversimplifies and applies a correlation: permit tons = trucked tons. Masters Dredging Company could have requested a 10 million ton permit but there will not be over 300,000 tons sold from that location because there is limited demand anywhere near that area.	The EIS analysis must assume that each applicant will operate to the maximum limit requested in their application in order to evaluate worst-case effects. Further, there is no basis to assume that an individual applicant will operate at any lower lever.
Comment Category: Water Resources		
03-003, 03-007, 03-008, 30-006, 32-007	Several comments were received suggesting that the dredging activity may not comply with Section 404 of the Clean Water Act (CWA) and that a compensatory mitigation and monitoring plan be developed prior to issuance of the CWA Section 404 permit. Other monitoring recommendations from commenters included a Blue River dredging exclusion area and water quality monitoring at discharge sites.	As discussed in Section 1.4, the EIS identifies and discloses the environmental consequences of the Proposed Action and the alternatives. The USACE will prepare a separate Section 404(b)(1) analysis that will be coordinated with this EIS but issued as a separate and independent document. The USACE will complete the Section 404 (b)(1) analyses prior to issuing the Final EIS and will include the analysis as an appendix to the Record of Decision (ROD). The final mitigation measures beyond current permit conditions (as described in Section 6.1), which may include monitoring, will be determined upon completion of the Section 404(b)(1) analysis and the ROD. Chapter 6 of the Final EIS discusses potential mitigation measures, including monitoring and dredging exclusion zones near water intakes to protect drinking water.
03-022, 06-018	Commenters suggest a text clarification regarding water quality standards when discussing the results of habitat restoration project water quality testing.	The comment regarding “water quality standards” and the lack of numeric criteria for nutrients is noted. USACE testing found that no adverse impacts to water quality in the Missouri River from nutrients or other tested constituents would occur by reintroduction of the sediments excavated or dredged at any of the five shallow-water habitat creation testing sites. As discussed in Section 3.7.3 of the EIS, the MDNR has proposed classifying the LOMR flowing between Atchison and Jackson Counties and Gasconades and St. Charles Counties in Missouri as impaired on the proposed 2010 Section 303(d) list. These counties cover the stated WBID #s 0226 and 1604.

Table 10.3-1 Comment-Response Matrix

Comment ID[a]	Comment	Response
06-019, 18-004, 18-005, 44-40l	Several commenters indicated that adequate alternate source water quality evaluations were not complete. These commenters indicated that new pit mines would result in increased resource disturbance and that in stream mining produces elevated turbidity levels.	Section 2.6.2.2 summarizes the potential alternate aggregate sources. Because decisions to increase production are made individually by facility owners, the facilities that would provide offsetting sand and gravel supplies cannot be specifically identified, nor can the impacts associated with specific facilities be defined. Section 4.5 has been updated in the Final EIS to include additional impacts to water resources due to the disturbance of land for open-pit mines. In stream mining could result in land disturbance and discharge of process water, which could increase sediment runoff into adjacent water bodies.
18-004	Comments stated that riverbank filtration uses river bed material to filter turbidity, pathogens, bacteria, and viruses. The comments stated that a reduction of the river bed through dredging would increase the possibility that these contaminants can pass through horizontal collector wells to the treatment plant.	See response to Comment 06-019. As discussed in Section 4.5.3.3, in general, the relationship between the quality of groundwater that is extracted from collector wells and thickness of the alluvial material between surface waters and collector wells is not well understood. The hydraulic conductivity of the river bed material influences the interactions between the LOMR and groundwater, and the alluvial aquifer thickness is an important component of providing filtration for municipal collector wells. Alluvial aquifer materials near the river may function as filters for river-borne particulate material and other contaminants from the river water, particularly for municipal groundwater collector wells.
43, 43-084	A commenter indicated that current dredging operations have state 401 certifications, indicating that dredging does not violate water quality standards or jeopardize endangered species.	The 401 certifications expire when the associated Department of the Army (DA) dredging permits expire. Section 401 certification will be conducted by the states for the new Section 404 permitting that is described in this section. The states can decide to issue or deny 401 certification with or without additional conditions based on the information available at the time of their decision. Section 401 certification under the CWA is a separate process from the ESA consultation that would determine potential impacts on federally listed threatened or endangered species.
43-118	Page 4.5-2. "…increased dredging would result in an elevated potential for vessel collisions or leakage of fuels, oils, and chemicals." – This statement is not realistic. The river is designed for increased shipping. It is currently underutilized. An increase in general shipping would have the same result, and the river is currently underutilized based upon the design criteria. Tomorrow, 30 tows and 180 barges could be contracted to come up the river. The risk does not change. Increased dredging would not change any of the risk. This statement continues to demonstrate bias against commercial sand dredging in the drafting of this document.	The risk of accident and spill is directly related to exposure as measured by the number of tug/barge miles traveled. Increased traffic, which may still be within the navigation design limits for traffic on the river, will nevertheless increase (or decrease) relative to overall traffic on the river.

Table 10.3-1 Comment-Response Matrix

Comment ID[a]	Comment	Response
43-119	Page 4.5-3, paragraph 1. "Note that suction-head dredges produce substantially lower levels of suspended sediment compared to cutter-head dredges because cutter-head dredges extract glacial deposits that are not part of the base load." – This statement is not correct as it applies to cutter-head dredges. Cutter-head dredges do not extract glacial deposits that are not part of the base load. Cutter-head dredges do not go deeper than suction head dredges. It is the position of the cutter-head operators that the authors do not understand how cutter heads work or their use on the river.	This comment addresses two issues. First is the relative amount of suspended sediment produced by suction versus cutter-head suction dredges. On this matter, research has shown that, in general, sediment resuspension by a plain suction dredge should be much less than that of a cutter-head dredge, in view of the absence of a rotating cutter in the plain suction dredges (Herbich and Brahme 1991). The plain suction dredge operates better in free-flowing sand and unconsolidated sediments and therefore causes less turbidity (Herbich and Brahme 1991). Cutter-head dredges, by virtue of their ability to excavate and loosen bottom materials, are capable of going deeper into hardpan or consolidated sediments than are plain suction dredges. Little information is available to characterize the amount to which this occurs on the LOMR.
43-121	Page 4.5-18. "Groundwater contamination associated with the use of alternate sources would be similar…." – Open pit mining in the floodplain will result in greater risk of flood hazard through the loss of integrity of inner basins protected by levees. Flood events will surface in the pit mines, undermining flood control. This has been documented numerous times, including during the major floods in 1993 and 1995.	Comment noted. Siting and development of open-pit mines near existing levees would require acquisition of permits, including a review of the mine development plan by any adjacent levee district. Such reviews should identify any potential mine development conflicts and resolve them as part of the permitting process.
43-152, 43-153	Commenter suggests that since the Dredgers do not impact water quality, the cumulative impact should not extend past the free-flowing reach of the Mississippi River.	The USACE does not agree that dredging has no impact on water quality. As discussed in Sections 3.7 and 4.5 of the Draft EIS, commercial dredging results in the temporary suspension or resuspension of sediments, increasing total suspended sediment and potentially increasing associated nutrients and contaminants. Although these water quality impacts were generally considered to be minor, it is recognized that cumulative impacts can result from individually minor but collectively significant actions taking place over a period of time (Draft EIS, page 5-1; 40 CFR 1508.7). Recognizing the national significance of anoxic zone conditions in the Gulf of Mexico, the USACE chose to address the potential for cumulative impacts.
44-53	A commenter described dredger efforts to test for contaminated sediments prior to and during dredging activities. The commenter indicated that testing results were indicative that dredging does not negatively impact water quality.	Comment acknowledged. Sediment contamination in the LOMR has been documented in some recent studies, but overall this topic has limited documentation. Researchers conducting USACE testing in support of levee construction concluded that, while elevated concentrations of contaminants were detected in elutriate water, the mixing would quickly reduce any elevated contaminant concentration to background levels and no significant release of contaminants would occur due to dredging in sand bed sediments. For these reasons, as discussed in Section 3.7.3.5, dredging would likely only slightly increase contaminant concentrations temporarily in the water column, if dredging were to occur in a location containing contaminated sediments.

Table 10.3-1 Comment-Response Matrix

Comment ID[a]	Comment	Response
44-54	The comment indicated that USACE dredging of side channels to create habitat do not result in similar nutrient impacts as commercial dredging. The commenter stated that commercial dredging does not discharge any overburden or soil as is the case with the habitat restoration dredging. Therefore, the commenter indicated that commercial dredging makes no contribution to the nutrient levels in the Missouri River and has no impact on hypoxia in the Gulf of Mexico.	Current dredging operations temporarily suspend sediment, which may release dissolved oxygen-lowering nutrients into the LOMR water column. As stated in Section 3.7.3.3 of the Draft and Final EIS, the disturbance of sediment during current commercial dredging operations is not likely to greatly increase the nutrient load of the LOMR or the Gulf of Mexico.
50-010	4.5-7 I think the Jacobs et al. (2008) citation is meant to be Jacobson et al (2009). In references, the name is correct but the date needs to be changed (p. 4.5-28).	The text on page 4.5-7 has been corrected in the Final EIS.
Comment Category: Aquatic Resources		
04-013	Page 2-80, Aquatic Resources/Wetlands, Floodplains….. - This section states there would be no change. However, Table 2.6-1 indicates stabilizing to increasing amounts of these resources by retarding or reversing some of the bed degradation. This should be clarified.	The text on page 2-80 has been revised in the Final EIS.
04-027	A commenter noted that Section 4.6.6.2 considered only existing currently permitted sources of aggregate as alternate sources in the discussion of potential impacts on aquatic species. The commenter suggested that if new sites or sources of aggregate were considered, then this section should include the potential to increase aquatic habitats within the river and the floodplain.	The Draft EIS evaluated the level of dredging proposed by the applicants, as well as other levels of dredging including the No Action Alternative, or denial of all permits and cessation of dredging in the LOMR. Inherent in these alternative actions was the assumption that any demand for aggregate not met by dredging in the LOMR would be met in the short term through other existing and already permitted sources, including dredging operations in other rivers such as the Kansas and Mississippi Rivers, floodplain sand pits, and upland sand pits and quarries. The environmental consequences associated with development or expansion of these existing sources was discussed generally in the Draft EIS. The Draft EIS also generally identified potential sources and sites that could be developed over the long term in lieu of dredging in the LOMR and the general environmental consequences of developing those alternate sites or sources. The Draft EIS acknowledges that development or expansion of upland or floodplain open-pit mines could eventually result in the creation of some sort of aquatic habitats. However, it is not practicable to precisely identify the potential consequences of specific projects that are currently unidentified.

Table 10.3-1 Comment-Response Matrix

Comment ID[a]	Comment	Response
43-126	A comment noted that dredge methods and the associated impacts differ depending on several site-specific and operational conditions.	Section 4.6.3.4 was revised in the Final EIS to state clearly that the size of the elevated suspended sediment plume downstream of the dredge depends on a variety of factors, including the hydrodynamic conditions of the dredging site, the type of dredge used, operational methods, and sediment type.
50-008	The commenter provided additional references that describe aquatic habitat in the LOMR.	The suggested references have been reviewed, and the information and citations have been incorporated into the Final EIS where appropriate.
50-012	In third paragraph it would be useful to add a more-available (somewhat higher-quality) publication (Jacobson and Galat, 2006) to back up the Johnson, Jacobson, DeLonay (2006) citation.	The citation was added on page 4.6-4 of the Final EIS.
50-014	4.6-11 First paragraph: better (more direct) citation than Jacobson, Johnson, Dietsch for the reduction in sediment load is Jacobson, Blevins, Bitner (2009). Best citation for reduction in turbidity is (Blevins, 2006).	The text on page 4.6-11 has been revised in the Final EIS.
Comment Category: Wetlands, Floodplains and Terrestrial Resources		
04-003	The comment notes that restoration activities under the MRRP have been designed to mitigate for habitat loss due to navigational maintenance. The MRRP does not mitigate for any habitat loss associated with commercial dredging.	Comment noted.
04-012, 04-026	Commenters identified the need for a qualitative analysis of the proposed Project's impacts on shallow-water habitat. Further, a commenter expressed the belief that certain alternatives would degrade sensitive habitats. Support was requested for an introductory statement regarding potential Project related impacts to this habitat type.	Comments noted. Section 4.6 discusses potential Project-related impacts to aquatic habitats, including shallow-water habitat. Section 4.6.5 contains a qualitative evaluation of potential effects associated with Project alternatives on river bed elevation and the potential for alterations of shallow-water habitat. Section 4.6.2.2 discusses potential indirect alteration of shallow-water habitat from Project-related dredging.
04-015	Page 2.81 - This section appears to have eliminated Aquatic Resources/Wetlands, Floodplains, etc.…	The text in the Final EIS has been updated to summarize these resource areas.
04-019, 04-031, 43-085, 43-128, 43-129, 43-136, 50-009	A commenter suggested an additional reference to characterize the relationship between wetlands, groundwater, and river stage. Another commenter stated that pre-1993 wetland estimates may underestimate the amount of wetlands within the Project area. Several comments argued against statements or conclusions regarding potential Project-related consequences to wetlands, with one commenter stating a belief that there would be no	The suggested reference has been incorporated into the Final EIS. NWI wetland coverage was used as this data set provided the most comprehensive wetland coverage of the general Project area. Section 3.9.4 acknowledges that the NWI dataset may not account for changes in wetlands due to the 1993 flood, agricultural wetlands, or restoration sites. Note that the wetlands sections describe the existing conditions, which includes

Table 10.3-1 Comment-Response Matrix

Comment ID[a]	Comment	Response
	wetland impacts as a result of the proposed Project. A commenter acknowledged that multiple factors, including duration, season, and source of water in wetlands influence wetland function and value and requested that the EIS evaluate the project-related effects to wetland functions and value.	dredging in a largely channelized river system. The impacts analysis compares the Project dredging alternatives to the No Action Alternative, not to natural conditions. River bed degradation in the LOMR has occurred as a combined result of several factors, including commercial dredging (see Section 3.4.6). River bed degradation lowers the river stage level, particularly during low-flow periods, which lowers the frequency and duration of surface water flows and lowers groundwater levels, resulting in decreased wetland acreage and changes in wetland types. Section 4.7 addresses potential Project-related impacts to wetland resources, including changes in water surface elevations and changes in the water table. While there would not likely be any direct alteration of wetlands due to dredging in the river, changes in surface water elevations could result in changes to wetland hydrology. Potential wetland impacts as a result of geomorphic changes in the LOMR are discussed in Section 4.7.2. Sections 3.7, 4.5, and 3.9 discuss the relationship between river stage, alluvial aquifer levels, and wetland hydrology. Response of wetlands to changes in river stage is site specific and depends on multiple factors. Increases in river stage, such as those under the spring rise under the MRRP, could result in increased groundwater levels in the floodplain, which could affect land drainage.
04-028	Page 4.7-5, Table 4.7-1 – Given the significant limitations on the available data, the figures in this table are not helpful. Quantifying impacts to two decimal places implies far more precision than is the case. We recommend you delete the table and include a qualitative evaluation, similar to shallow-water habitat.	The acreages of potential wetlands that may be influenced by groundwater have been updated to remove decimal numbers. While NWI data may not fully characterize wetland resources that are potentially influenced by the LOMR alluvial aquifer, the data represented in Table 4.7-1 provide a relative comparison of the quantity of wetlands present and potentially impacted under each alternative within each Project segment.
43-120	A commenter noted that increased surface water elevations may result in poor drainage in agricultural wetlands and that elevated surface water elevations could also change wetland hydrology. Further, the commenter noted that a lower water table could have a beneficial economic impact through increased farm yield or increased wastewater treatment applications.	Increases in river stage, such as those under the spring rise under the MRRP, could result in increased groundwater levels in the floodplain, which could affect land drainage. The commenter notes that a lower water table can have a beneficial economic impact on agriculture. It is acknowledged that there are potential agricultural benefits from reducing groundwater levels in certain cases, particularly in areas with high groundwater levels and with crops that cannot tolerate excessive soil moisture. These benefits must be weighed against increased pumping costs in agricultural areas where groundwater is used. Accordingly, the net economic impact on agriculture from changes in groundwater levels is site specific and must be considered on a case-by-case basis. The commenter also states that municipalities who utilize bottomland farmland for the application of wastewater treatment plant sludge will have more consistent operations and opportunities. To the extent that decreased groundwater levels would provide more capacity for the application of wastewater sludge, the Project could provide operational

Table 10.3-1 Comment-Response Matrix

Comment ID[a]	Comment	Response
		benefits to municipalities by concentrating disposal activities in fewer locations, thereby potentially resulting in more cost-efficient operations.
43-127	The commenter noted that increased sediment may reduce non-native species' reproductive capacity.	Section 4.6.3.4 in the Final EIS was updated to state that non-native fish species, compared to native species, may be more sensitive to elevated turbidity levels.
43-130	For the record, we note a numbering discrepancy in this section as there are two sections numbered "4.7.1."	The text has been corrected in the Final EIS.
44-40d	Page 2-60 Table 2.6-1 Summary of Impacts of the Proposed Action and Alternatives This rote exercise in tabulation is flawed and should be completely redone because of the following errors: 4. DEIS incorrectly evaluated the impacts and suitability of in-stream and flood plain alternatives.	The commenter does not provide details of the alleged incorrect evaluation; therefore, a response is not possible.
44-40k	A commenter suggested that the EIS failed to identify the likely loss of emergent agricultural wetlands from new pit mines.	Any expansion of existing or new land-based mining due to the use of alternate sources may affect wetland resources and could result in conversion of wildlife habitat or vegetative land. Similarly, new or expanded open-pit and floodplain mining under the No Action Alternative could result in conversion of wetlands, wildlife habitat, and vegetative land cover to industrial land covers. Any expansion of existing or new land-based mining that would directly affect wetland resources, including emergent wetlands, would be required to obtain a CWA Sections 404 and 401 permits and certification. Appropriate wetland permitting of alternate sources would require implementation of avoidance, minimization, and mitigation measures.
50-017	5-23 3rd and 4th paragraphs: the extent to which sediment released from the floodplain in creating shallow-water habitat can compensate for dredging depends as well on the particle size of the floodplain sand compared to the bed-material load of the river. This analysis has not been made, to my knowledge. Presumably, floodplain sedimentation and sedimentation in accreted lands would have smaller sand particles, on average, than bed-material load. A significant portion of the accreted land sedimentation may have been from what would be considered wash load on a cross-section averaged basis, but was deposited from traction or suspension in slow velocities on the floodplain or in accreted areas. Although there is a lot of sand in accreted land and the floodplain, it follows that most of it would be transported as wash load with present-day channel velocities.	The text in Section 5.3.2 has been revised in the Final EIS to include a discussion of sand particle size in the accreted floodplains and its suitability for dredging or availability for creation of shallow-water habitat.

Table 10.3-1 Comment-Response Matrix

Comment ID[a]	Comment	Response
Comment Category: Federally Listed Species		
03-009, 43-131, 43-B007, 50-001, 50-013, 50-015, 50-016, 50-020, 43-045	Several individuals and agencies commented on the potential Project-related impacts on pallid sturgeon, and they expressed support for potential mitigation measures. A commenter provided additional citations and suggested text edits to describe pallid sturgeon habitat use in the LOMR. Further, several comments indicated that pre- and post-spawning pallid sturgeon may migrate through the Project area during dredging operations and, therefore, the EIS should evaluate the potential Project-related impacts on pallid sturgeon migration. Several comments indicated that the BiOp identified a need for increased sediment and turbidity in the LOMR to support pallid sturgeon. These commenters stated that sediment is limited by storm water restrictions and that tributary headcutting under some of the Project alternatives may be beneficial to pallid sturgeon due to introduction of sediment. A commenter contested a statement in the Draft EIS that tributary headcutting could result in reduced pallid sturgeon habitat connectivity.	Sections 3.10 and 4.8 have been updated in the EIS to include additional references for pallid sturgeon, where appropriate. Section 4.8 has also been updated to discuss pallid sturgeon movement in the LOMR and the potential for dredging to cause a barrier to migration. As discussed in Sections 4.6, 4.8, and 6.4.5, there are limited studies identifying potential entrainment rates and any associated population-level effects associated with dredging in the LOMR. The USACE has completed a Draft Biological Assessment which concluded that the pallid sturgeon is not likely to be adversely affected by the Environmentally Preferred Alternative, and the USACE is currently in informal consultation with the USFWS under Section 7 of the ESA. Known pallid sturgeon spawning areas have been identified, and dredging has been restricted in these areas under the current permits (and will be continued under the Environmentally Preferable Alternative). As described in Section 4.8, tributaries may be used for sturgeon foraging. The current restrictions were not implemented to protect potential feeding habitat that may be present in tributaries. As discussed in Section 4.2, some of the dredging alternatives may result in increased tributary headcutting, which may result in an impassable barrier to fish migration. As discussed in Section 4.6.3.4, native aquatic species evolved in the LOMR under historically turbid conditions, and turbidity that mimics the historical environment has largely been eliminated in the LOMR. Because of the historical context and role of suspended sediment in the LOMR system and the general reduction in suspended sediment in recent history, the introduction of suspended sediment would likely result in a temporary improvement in habitat conditions for native aquatic species.
04-020, 08-001	Commenters requested that Sections 3.8 and 3.9 be updated to discuss state conservation lands, state parks, USACE mitigation lands, and state-listed aquatic species critical habitat. Further, the state of Kansas noted that a Kansas Department of Wildlife and Parks Action Permit may be required if Project activities were to occur within state-designated aquatic critical habitat.	Section 3.9.7.1 has been updated to discuss Missouri Department of Conservation Opportunity Areas, federal mitigation lands, and parks. Section 3.8.6 has been updated to identify state-identified critical habitat. Dredgers would be responsible to complete any required state permitting or consultations, as appropriate, prior to initiation of Project activities.
04-021	The commenter noted that bald eagle breeding in Missouri is increasingly common.	Text has been updated in the Final EIS to reflect that bald eagles have been a more common breeder in Missouri since the 1990s, including along the LOMR in some locations.

Table 10.3-1 Comment-Response Matrix

Comment ID[a]	Comment	Response
04-022	Page 3.10-2, Consultation with USFWS - Please revise the text to indicate the Corps, as the federal action agency, makes the determination of project effect to federally listed species.	Text on page 3.10-2 has been updated in the Final EIS.
04-023, 04-030	Commenters requests that Section 4.8 be updated to include White Nose Syndrome (WNS) as a threat to the Indiana bat.	Text on page 4.8-11 has been updated in the Final EIS.
04-029	Page 4.8-6, Second paragraph – The text should include the river stage that corresponds to 75,517 acres of water surface (?) in the project area. In addition, 25% of the project area under dredging permits seems quite large considering the number of conditions on the permit. The final document should confirm this figure.	The text referred to, now on page 4.8-6 has been updated in the Final EIS.
05-003	Comment notes the potential from impacts during in stream mining, including impacts to threatened and endangered species.	The environmental effects of existing in stream mining permits, including the effects on threatened and endangered species have been considered. Development of any new in stream gravel mines or other alternate sources would be required to secure all appropriate permits, which would identify the environmental effects of such operations. It is not possible within the scope of the EIS to speculate on the location of new mines; therefore, the general environment effects have been summarized in Section 2.3.2.1 of the EIS.
43-122, 43-123, 43-132, 43-161, 44-44	Support was requested for several introductory statements regarding potential Project-related entrainment. Also, a comment stated that dredging uses a small fraction of river water and that water use for dredging is substantially less than power plants and municipal water intakes. A commenter also noted that dredges have been monitored for entrainment on the Mississippi River.	Sections 4.6.3.1 and 4.6.3.2 contain a full discussion, including citations, of Project entrainment potential. As stated in Sections 4.6 and 4.8, limited information is available regarding the rate of pallid sturgeon entrainment in the action area and throughout the species' range. There is uncertainty about the population-level effects of entrainment due to the uncertainty of egg, benthic juvenile, and drift larvae mortality that may occur naturally or from entrainment. Further, multiple factors such as individual location relative to the dredge, swim speed, response to noise and turbidity, and localized abundance and distribution impact the rate of entrainment. Entrainment rates and potential mortality are not exclusively determined by the rate of water intake. Due to the uncertainty associated with potential dredging-related entrainment, Chapter 6 discusses potential monitoring to determine pallid sturgeon entrainment rates. Further, the USACE is consulting with the USFWS regarding necessary pallid sturgeon minimization measures. Consultation with the USFWS will consider the direct, indirect, and cumulative impacts of the Environmentally Preferred Alternative on pallid sturgeon. Among other potential effects, this consultation will consider potential entrainment. The cumulative impact evaluation for the Environmentally Preferred Alternative would consider impacts from other non-federal actions, including potential entrainment from non-federally funded or permitted sources. All federal actions potentially resulting in

Table 10.3-1 Comment-Response Matrix

Comment ID[a]	Comment	Response
		impacts on federally listed threatened or endangered species would require consultation under Section 7 of the ESA.
43-124, 43-125	Several text edits were suggested to clarify potential tug boat propeller entrainment.	Tow boat propellers have been found to cause entrainment in the Mississippi River, but no propeller entrainment studies have been identified for the LOMR. While the rate of entrainment has not been determined on the LOMR, entrainment may occur, depending on towboat traffic, location, and the river channel geometry. As discussed in Section 4.6.3.2, rates of entrainment on the LOMR may vary based on these site-specific and species-specific conditions. The text in the Final EIS was clarified to avoid implying that the overview discussion of potential vessel impacts was comparing the individual Project alternatives to existing conditions in the LOMR.
43-133	Page 4.8-7, paragraph 2. "Increasing the dredging or degradation limits in the Kansas River dredging permits would require a new EIS and consultation with the USFWS regarding potential impacts to federally listed threatened and endangered species, including the pallid sturgeon." – Add the following sentence: "As a result, the Kansas River is not an available alternate source to replace Missouri River sand."	The requirement that alternate sources be permitted through appropriate federal and state jurisdictions does not dictate the conclusion that such a source is not available. The analysis in the Draft EIS does recognize that the current limitations to dredging in the Kansas River could limit the amount of any increase in production from this source. See the response to 43-023 (AS),
43-137	Page 4.9-10, paragraph 1. "Sand plant construction under the Proposed Action would require land-clearing activities that could result in overland runoff or erosion from uncontained storm water." – Under current law, provided appropriate zoning, assessments, and Best Management Practices are followed. These activities are legal. Speculation that some harm will occur is acute paranoia and pure presumption. In fact, the Corps, in notching river structures in the immediate area of this proposal, increase the amount of erosion and sediment runoff into the river. This is a completely legal act. Humans have a right to do something. This section should be deleted.	Comment noted.
Comment Category: Land Use and Recreation		
04-002a	The comment requests further consultation with the NPS regarding campsite locations.	Information on how Lewis and Clark Trail campsite location interpretations were used will be provided to Trail Geographer Ryan Cooper. Consultation regarding these sites with the NPS will continue.

Table 10.3-1 Comment-Response Matrix

Comment ID[a]	Comment	Response
04-032	Comment recommends consultation with the National Park Service regarding impacts to a campsite located in the St. Charles Segment that may be impacted under the Proposed Action.	Comment noted.
43-047	Page 2-77, paragraph 2, Land Use and Recreation. "A minor increase in the risk of washout of land-based recreation trails during high-flow events would take place in Jefferson City…." – This is simply not factual.	Portions of state recreation trails approach the river at several locations along the Jefferson City segment and are at risk of erosion from major high-water events; the increased risk of such erosion was rated as minor.
43-134	Page 4.9-2, third paragraph. "Therefore, impacts on recreationists using the river portion of the Historic Trail are categorized with direct impacts to recreational boating from the presence of dredges and barges." – Congress has established the priority of activity on the river. Navigation is given the primary priority of the Authorized Purposes. This has been supported by the courts. Therefore, recreational boating is actually a direct impact on dredges and barges, potentially creating hazards for navigation and the desire for operators to protect individuals…Page 4.9-4. "…an increase in barge trips on the river related to the increase in material dredged could affect recreation boating, both in terms of the area available for boating and the quality of experience." – Navigation is a priority authorized by Congress. The question is not, "What is the impact of tows and dredges on the boating recreational experience?" Rather, it is the other way around, "How do additional recreational boats affect navigation?"	The USACE recognizes the rights of commercial dredge and barge operators to navigate and operate on the Missouri River. Although navigation and recreation are both Authorized Purposes of the LOMR as established by Congress and navigation is of higher priority than recreation, NEPA still requires evaluation of the potential impact of the proposed dredging on recreation. The USCG is the agency primarily responsible for safety and navigation on the river. The referenced text in the Draft EIS was not intended to portray recreational boating as being more important than dredge and barge operations or to convey that dredges and barges operating with valid permits should be subject to any disadvantage for the benefit of recreational boaters. The only reference to potential mitigation for recreational boaters is in Section 6.4.1, which states "Boat ramps are susceptible to local scour and deposition due to river bed degradation limiting or impeding access to the river. Boat ramps could be monitored periodically during low-flow seasons and repairs made to ensure access."
43-135	Page 4.9-6, paragraph 1. "…required closure during low-flow periods because of scour damage, no other public access points would be available near the reach." – This is not accurate. The Capital View Access provides access to the river in this area with a safer entry location	Text on page 4.9-6 has been revised in the Final EIS to include reference to use of Capital View Access as an alternative to the Noren Boat ramp. Capital View Access offers bank fishing and canoe access to Cedar Creek one-half mile before it flows into the Missouri River.
43-138	Page 4.9-12, paragraph 1. "Barge traffic in the river would be substantially reduced, increasing the river area available for recreational boaters and increasing recreational opportunities." – Another wrong presumption presented by the authors. With an 84% reduction in navigation, the BSNP may be terminated and all federal levees allowed to collapse as they have no further purpose. The river will once again become a high-risk waterway	Comment acknowledged.

Table 10.3-1 Comment-Response Matrix

Comment ID[a]	Comment	Response
	and recreational boating will actually decrease. The authors are reminded that the Authorized Purposes as provided for by Congress place a primary Authorized Purpose for navigation, not recreation. This has been litigated and decided. It is not a question.	
Comment Category: Economics and Demographics		
02-001	The comment states that the Draft EIS grossly understates the importance of commercial river sand in the State of Missouri, the direct impact of commercial river sand on the cost of concrete in the State of Missouri is significant, and its importance to the concrete industry in Missouri cannot be understated.	It is not the intent of the Draft EIS to minimize the importance of commercial river sand from the LOMR to the concrete industry, nor to the entire Missouri economy. The economic analysis presented in the Draft EIS supports the statement that the LOMR represents a source of high-quality and low-cost material that generates economic activity throughout the state. Specifically, the analysis indicates that reduced LOMR supplies, as would be the case under the No Action Alternative, would result in substantial increases in the delivered cost of sand and gravel to wholesale customers, including the concrete industry (see Table 4.10-2). For this analysis, it was assumed that these cost increases would ultimately be passed on to retail consumers of sand and gravel products, thereby adversely affecting income levels and resulting in a decline in economic activity attributed to reductions in household spending levels. However, it is also acknowledged that displaced production from LOMR could potentially be replaced by alternate sources in the region, thereby resulting in a shift in economic benefits from existing dredging operations to other mining operations in Missouri and adjacent states, as well as potential benefits in the transportation industry. Also refer to response to Comment 43B-012 for more information on forward-linkages in the economy, which represent direct impacts to the concrete and construction industries in Missouri.
05-001, 06-003	The comment suggests increased expenditures for transportation of sand and gravel from alternate sources negatively affects the regional economy.	The economic analysis is intended to demonstrate the economic effects associated with changes in dredging allocations from the LOMR. The Draft EIS acknowledges that the increased cost of sand and gravel in the market would adversely affect end users of sand and gravel products and ultimately the public. Although not explicitly stated, these effects also apply to public agencies using sand and gravel resources, such as the MoDOT, that rely on these materials for road construction projects. Such an increase in public-sector costs would represent an economic burden on taxpayers in the state, either in the form of reduced number of projects and/or higher taxes. The regional economic effects associated with increased sand and gravel costs, including employment impacts, are presented in Section 4.10 of the Draft EIS.

Table 10.3-1 Comment-Response Matrix

Comment ID[a]	Comment	Response
06-003	The commenter states that the Corps should reconsider the economic impacts to taxpayers, MoDOT and other commercial users of Missouri River sand and gravel and ensure that all the potential economic impacts have been thoroughly analyzed.	The economic analysis in the Draft EIS assumes that potential increases in the cost of sand and gravel would ultimately be passed through to end users of sand and gravel products. Accordingly, there would be a resultant reduction in disposable income and household spending levels that would result in indirect effects on the local economy (as outlined in Section 4.10 of the Draft EIS). In the case of public agencies, such as the MoDOT, the economic effects would ultimately fall on taxpayers in the state (as outlined in response to Comment 05-001).
06-004, 06-020	Commenters suggest that the Draft EIS did not include the future variability of fuel costs as it would affect overall sand and gravel transportation costs and that the analysis be modified to incorporate such variability.	The transportation-cost model used in the economic analysis is a static model; therefore, it is not possible to account for variations in fuel costs over time. The estimated cost of shipping implicit in the model is $0.20 per mile, which falls in the upper end in the range of shipping costs provided by dredging operators on the LOMR. It is acknowledged that fuel prices are volatile and will change over time. To the extent that shipping costs are greater than $0.20 per mile, the estimated increase in the delivered cost of sand and gravel in the region would be greater than what is reported in the Draft EIS. Conversely, if fuel prices decrease, the impacts on sand and gravel costs would be less severe.
06-021	Section 4.10 – Economics and Demographics. It would be beneficial to see more than the average short term cost of sand and gravel produced by the transportation-cost model. A table could be provided for each segment of the alternate sources chosen by the model, the amount of sand and gravel produced under each alternative from that source, the transportation cost, and the distance from the demand center.	The commenter would like to see more detailed results from the transportation-cost model, including the alternate sources chosen by the model, the amount of sand and gravel produced under each alternative from that source, the transportation cost, and the distance from the demand center. The type of information requested forms the basis for the estimated changes in the short-term delivered cost of construction sand and gravel presented in Table 4.10-2 of the EIS. When aggregating the individual combinations of supply and demand combinations, the transportation-cost model is an approximate representation of real-world conditions. However, it is not appropriate to evaluate the viability and market patterns of each alternate supply source and the relationship to demand centers in the primary market area because each individual market combination is not intended to be a prediction of the specific response that would occur, but rather only one component of an integrated model that represents how the market would respond in general terms. Further, the logic inherent in the model is that the demand for construction sand and gravel would be met by alternate supply sources that are most proximate to demand locations. While intuitive, it is acknowledged that other factors, beyond transportation distance, play a role in establishing market patterns; therefore, to look at predicted market patterns by individual supply and demand nodes is not appropriate. Instead, the model, as a whole, is used to approximate adjustments to the construction sand and gravel market on a macroeconomic (rather than microeconomic) scale.

Table 10.3-1 Comment-Response Matrix

Comment ID[a]	Comment	Response
06-022	Section 4.10 - Economics and Demographics. For example, under Section 4.04: Navigation and Transportation, this information could be used to provide some base estimate of the effects from truck transportation on surface roads from alternate sources, such as maintenance and repair costs… Although these alternate sources may not be the ultimate source chosen if a reduction in dredging is implemented and it cannot be known what kind of production increase may occur at these sources, they would at the very least provide a limited quantified view of a possible scenario, rather than solely a qualitative view for several areas of the Draft EIS.	The comment states that information on production and shipping distances from the transportation-cost model (see response to Comment 06-021) should be used to estimate effects from truck transportation on surface roads associated with alternate sources, such as maintenance and repair costs. Information on production and shipping distances from the transportation-cost model was used in the Draft EIS to qualitatively assess the transportation-related impacts of the various alternatives under consideration. It is also acknowledged that increased transportation requirements would affect maintenance and repair costs on affected roadways. However, the transportation-cost model is based on straight-line distances and is not route-specific; therefore, impacts to specific roadways, such as repair and maintenance costs, cannot be quantified.
21-001, 40-002, 45-001, 40-006, 45-005	The comment suggests that the Draft EIS underestimates the value of dredging on Missouri's economy.	Section 3.12 of the Draft EIS addresses the role of sand and gravel production in the Missouri economy. Specifically, Section 3.12.6 describes the economic benefits of all construction sand and gravel production in the State of Missouri, and Section 3.12.7 highlights the economic value and economic activity supported by existing dredging operations on the LOMR. In addition, page 3.12-17 of the Draft EIS notes the contribution of construction sand and gravel to the intermediate and final products of certain industries (i.e., forward-linkages), and the importance these linkages to the total economic benefits generated by commercial dredging activity on the LOMR. Also see the response to Comment 43B-012.
21-002, 40-006, 45-005	Several commenters' suggest that factual errors and conclusions have been reached about Missouri construction, shipping and transportation.	The comment did not cite specific examples; therefore, a detailed response cannot be offered.
21-004, 45-003, 40-004	Several commenters suggest that out-state sand and gravel sources are not available in sufficient volume and are too costly to ship do not provide the same volume, type, grade and quality of material available from the Missouri River, and even if they could, the shipping costs alone would drive up the cost of the end product.	It is acknowledged that sand and gravel from the LOMR generally represents a high-quality and low-cost source of construction aggregate based on geological characteristics and the proximity of the resource to major demand centers along the river. However, sand and gravel from alternate sources considered in the Draft EIS, namely material from the Kansas and Mississippi Rivers, are of comparable quality to LOMR supplies. Other alternate sources considered in the analysis may be of lower quality but were assumed to meet basic construction requirements for many uses that are currently served by LOMR supplies. Further, it was not possible to evaluate the quality of sand and gravel reserves at all alternate mining operations. The transportation-cost model used in the analysis supports the claim that shipping costs associated with alternate sources of material would increase, driving up the delivered cost of construction sand and gravel in the region.

Table 10.3-1 Comment-Response Matrix

Comment ID[a]	Comment	Response
37-001	The comment suggests that restricting or prohibiting dredging on the LOMR would negatively impact the regional home building industry through increased material costs.	The transportation-cost model used in the economic analysis supports the claim that shipping costs would increase if LOMR sand and gravel were no longer available, which would drive up the overall cost of construction. Table 4.10-2 presents the estimated costs for delivered sand and gravel across market areas. The adverse economic effects of reductions in LOMR dredging on the regional economy are the focus of the economic analysis presented in Section 4.10. It was assumed that increased construction costs would be passed through from the home building industry to the public in the form of higher building costs. The economic analysis did not consider the temporal aspect of delivering supplies from more distant alternate sources to demand centers. It is acknowledged that increased transportation distances and ramp-up periods for capacity expansion at alternate mining operations could result in project delays; however, the magnitude of economic costs associated with project delays is unknown and difficult to quantify.
39-001	The commenter suggests Missouri pit mines would be unable to make up the short fall in sand and gravel supplies from the Missouri River under some of the alternatives evaluated. The commenter suggests the Mississippi River would instead be the major supplier and would have a major effect on price comparison and emissions that would come from the extra truck traffic. The commenter also notes that under current conditions sand and gravel from the Missouri River is delivered at distances of up to 120 mile from the LOMR.	The economic analysis does not claim that pit mines around the State of Missouri would be able to make up the shortfall from displaced supplies from LOMR. Instead, the Draft EIS states that a combination of alternate sources could potentially make up the shortfall in the short term, including the Kansas and Mississippi Rivers, Meramec River, open-pit mines, and in stream sand and gravel operations. In addition, in the long run, new floodplain pit operations would likely be developed in proximity to demand centers as an additional source of sand and gravel. The Draft EIS acknowledges that there would be a short-term increase in the delivered cost of sand and gravel in the state, as well as additional truck traffic based on an increase in shipping requirements. It is further acknowledged that sand and gravel from the LOMR generally represent a high-quality and low-cost source of material based on geological characteristics and the proximity of the resource to major demand centers along the river. As such, the Draft EIS does not claim that alternate sources would be more profitable relative to LOMR supplies; instead, the Draft EIS illustrates that the cost of sand and gravel would increase without LOMR supplies.
40-004	The comment states that out-state sand and gravel sources do not provide the same volume, type, grade and quality of material available from the Missouri River, and even if they could, they would be doing so because transportation costs at present.	See response to Comment 21-004. Further, it is acknowledged that alternate sources in the region do not currently serve demands for sand and gravel in the primary market area due to relatively higher transportation costs.
41-002, 43-048, 43-B026, 43B-023, 85-002, 87-002	Several commenters suggest that sand and gravel production from the LOMR under the Proposed Action would have a significant economic effect in contrast to the conclusions stated in the Draft EIS.	The economic analysis of the Proposed Action is multi-faceted based on two different assumptions regarding production levels. In one scenario, it was assumed that dredging levels under the Proposed Action would conform to historical demand (approximately 6.9 million tons per year), as it is unlikely that production would occur at levels that

Table 10.3-1 Comment-Response Matrix

Comment ID[a]	Comment	Response
		exceed demand. Under this scenario, production would not change, and the related economic benefits of dredging (as measured by output, income, and employment) would not change noticeably from baseline conditions. The other scenario considers production levels at maximum permit levels (approximately 11 million tons per year). This scenario was evaluated qualitatively. In the second scenario, two potential outcomes are expected: (1) increased dredging production would result in expansion to new markets, thereby potentially displacing existing land-based producers of sand and gravel; or (2) dredging operations would stockpile excess sand and gravel, which would provide flexibility in meeting future demands. It was implicitly assumed that demand would remain constant in either case. Refer to pages 4.10-4 and 4.10-5 of the Draft EIS for more information.
43-006	Page 1-4, end of paragraph. "The market area is determined largely by the shipping costs for the finished sand and gravel, which is primarily the cost of hauling by truck." We suggest the following addition at the end of the sentence, "and by the location of the proposed major projects."	Comment noted and text in the Final EIS has been changed accordingly. Also see response to Comment 43B-001 (E5).
43-044	Page 2-77, top of page, Wetlands, Floodplains, and Terrestrial Ecology. "…associated groundwater and wetland impacts." – There is no economic or public health analysis inside the context of this document regarding either (a) the loss of farmland and its impact on public health or (b) the reduction of mosquito populations and their impact on future health scenarios.	See response to comment 43-120 regarding the potential loss of farmland due to groundwater levels. It is acknowledged that there are potential human health benefits from reducing groundwater levels and wetlands in certain cases. To the extent that the Project would provide mosquito control if the Project were to result in decreased numbers of wetlands or decreased groundwater levels, there could be a mosquito control benefit to municipalities. Overall, the magnitude and value of reduced groundwater levels and the associated mosquito control would be site-specific.
43-058, 43-111, 43-159, 43-099	Several comments indicated that although division of the LOMR into five different segments may be useful for characterizing environmental effects, it is not an appropriate structure for analysis of changes in truck transportation. Comments also indicated that the dredgers object to and will oppose any use of the segmentation structure for allocation of dredging amounts in the permits because it does not take into account market demands or the differences in dredging, marketing, and transporting sand by the various applicants and does not meet or follow the most recent permitting structure because the segments do not correlate with the property rights vested in recent permits nor correlate with business operations amongst the applicants.	The comment suggests that the analytic structure of the EIS analysis and specifically the geomorphologic analysis should be based on the structure of the sand and gravel industry not the natural resource. The choice of a segmentation approach for the LOMR is based on three factors, 1) the LOMR is not homogenous throughout its length so it must be analyzed in some manner by segments, 2) data describing sediment loads is only available at a limited number of locations and 3) major sediment input from tributaries make tributaries the most logical break points in a segmentation scheme. As discussed in Section 3.3, these factors were used to select the segment boundaries used for the analysis. While economics and in particular socio economics are one element of the EIS analysis, the USACE believes the EIS has been able to assess these impacts accurately within the chosen framework. Relative to existing permitting structure, Section 404 permits do not create vested or unalterable legal rights. They are subject to reevaluation and modification based on available information. In addition, the

Table 10.3-1 Comment-Response Matrix

Comment ID[a]	Comment	Response
		permits in question have completed their established lifespan. The USACE can provide no assurance of renewal of a permit as it is required to assess the public interest in such an activity. Although dredging has been permitted in the past, the federal action and associated public interest review in question is the proposed dredging for the applications to dredge in the future. The USACE recognizes equity and property considerations as it determines the appropriate way to incorporate the findings of the public interest review, including the EIS, into its Record of Decision and ultimately its permits.
43-083	As stated in the document, the transport of sand as aggregate and other aggregate materials transported by the Missouri commercial sand dredgers is in excess of 85% of current navigation on the LOMR. Consistent with the economics evaluation in Appendix B of this comment letter, the No Action Alternative, Alternative A, and Alternative B will result in elimination of the majority of the 85%. Other indirect effects were not reviewed by the authors.	The comments states that (1) the transport of sand as aggregate and other aggregate materials transported by commercial sand dredgers is in excess of 85 percent of current navigation on the LOMR; and (2) the indirect effects of eliminating this navigation on the LOMR were not evaluated in the Draft EIS. It is not clear what types of indirect effects are being referenced in this comment. The direct and indirect regional economic effects of reducing sand and gravel production from the LOMR are the focus of the economic analysis presented in Section 4.10. Direct economic effects include employment of dredging operation workers; indirect effects include employment of workers in support industries, such as businesses that provide barge shipping services to dredging operations.
43-087	The commenter makes several statements in this comment. First, the commenter believes that the economics and demographics chapter and the economics and demographics analysis of alternatives are flawed and inaccurate and the assumptions are misguided and inappropriate. They also present their own economic analysis that was prepared by Edward Howard Robb, Professor Emeritus, University of Missouri. Second, the conclusion of their independent economic analysis is that the Draft EIS authors erred in their methodology, conclusions, and most importantly the ability of tonnage lost from the Missouri River to be supplanted and replaced by sand tonnage from the Kansas and Mississippi Rivers and other alternative outlying sources; in particular, alternative outlying sources do not exist and there is not sufficient quantity and type of material to meet the requirements. Third, their economic analysis has determined that the transportation theory is flawed. Fourth, they believe the economic section needs to be withdrawn and revised with real Missouri presumptions added based on actual Missouri data.	In response to the first statement, the comment is noted; however, specific flaws and inaccuracies are not referenced, so it is not possible to respond to this statement. In response to the second statement, see response to Comment 43-023(AS), which provides a comprehensive discussion of the rationale related to the viability of alternate sources and addresses key issues raised by the commenter. In response to the third statement, see response to 43B-001 (E5). In response to the fourth statement, the comment is noted; however, the economic analysis was based on the best available information and assumptions at the time the analysis was prepared.

Table 10.3-1 Comment-Response Matrix

Comment ID[a]	Comment	Response
43-140	The commenter believes the economics analysis included in the Draft EIS to be flawed.	The comment does not indicate specific flaws in the economic analysis; therefore, a response is not provided.
43B-001 (E5), 41-001, 43-112, 43B-008, 43B-009, 43B-010, 43B-011, 43-045	These comments generally indicate that inappropriately defining the market area, particularly the 25-mile radius for market area, flaws the economic analysis presented in the Draft EIS. The comments provide instances where sand and gravel from the LOMR is hauled around the state (beyond the 25-mile radius) to meet market demands and construction requirements for major projects. Therefore, the primary market area is not consistent with actual markets now served by dredging operations on the LOMR. The comments suggest revisions to the market areas based on MSA definitions and local understanding of the affected markets. The proposed definition of the primary market areas would expand geographic area under consideration in the economic analysis and is perceived to better define the market area with regard to the demand for commercial sand and gravel.	The economic analysis presented in the Draft EIS is based on a "primary market area" for construction sand and gravel served by existing dredging operations on the LOMR. A comprehensive definition of the primary market area is presented in Section 3.12.3 of the Draft EIS. A number of comments contend that the market area used in the analysis was too confined and did not represent real-world conditions. The Draft EIS acknowledges that construction sand and gravel produced from the LOMR is used throughout Missouri and in other states (see footnote 2 on page 3.12-3). However, for the purposes of the transportation-cost model, a market area had to be defined that approximates the extent of demand currently being met by existing dredging operations on the LOMR. Accordingly, the analysis presented in the Draft EIS takes into account research on the sand and gravel industry and information provided directly by the dredging operators to develop a reasonable approximation of the primary market area served by existing LOMR dredging operations. Although any model is intended to replicate real-world conditions, it is acknowledged that it cannot account for every possible market combination of supply sources and demand centers; instead, the transportation-cost model is intended to provide a generalized framework to estimate anticipated changes in production and distribution patterns in the sand and gravel industry in Missouri. Research on the sand and gravel industry indicates that transportation costs represent a limiting factor in defining the extent of the market. In addition, the Dredgers were queried as to the locations they served in order to gain a better understanding of the sand and gravel market in the Missouri River region. Some respondents provided detailed data on the markets served, while others provided anecdotal information. After reviewing the data and information, it appeared that LOMR dredging operations were fairly typical for the sand and gravel industry, primarily serving a localized demand in response to limitations on transportation costs (Dredgers responses to market locations served generally ranged from a distance of 20–60 miles), although some Dredgers stated that they serve more distant locations throughout the state (up to 120 miles in some cases). However, it is clear that a much smaller market was generally required in order to be economically competitive. Based on this information, a 25-mile radius of existing sand plants was used to define the primary market area. However, the primary market area actually extends beyond the 25-mile buffer in certain locations because it captures entire counties that fall predominantly within this buffer area. In addition, the primary market area used in the analysis captures most of the major urban areas in the

Table 10.3-1 Comment-Response Matrix

Comment ID[a]	Comment	Response
		state, which represent key centers of demand and tend to be located along the LOMR corridor (i.e., Kansas City, Jefferson City, St. Charles, and St. Louis). Specifically, the market area, as defined, captures a large proportion of the total population in the state (approximately 62 percent of the total population in Missouri), which serves as a key proxy for sand and gravel demand. It is acknowledged that the location of future projects, especially large roadway projects, will also influence demand; however, it is not possible to forecast the location of the future projects. It should also be noted that expanding the primary market area in the transportation-cost model would demonstrate that economic efficiency would improve (i.e., cost would decrease) if LOMR supplies were reduced because the model would use alternate sources in the region that are closer to demand centers (with lower transportation costs) in more distant regions of the state. Because this is not an intuitive result of reducing LOMR production, the primary market area was defined more tightly to more accurately reflect anticipated changes in the delivered cost of sand and gravel in the region. The fact that some dredging operations ship their products outside the primary market area indicates that LOMR supplies are demanded for certain uses irrespective of cost; however, it was not possible to account for variations in the quality of materials produced from the LOMR versus the quality of materials produced from other mining operations in the state nor the preferences of individual points of demand.
43B-002, 43B-016, 43B-021	Commenters suggest that the analysis should be disaggregated and treat sand and gravel as separate commodities.	It is acknowledged that the primary commodity extracted by LOMR dredging operations is construction sand for concrete and asphalt manufacturing, although other byproducts are also produced. All data collected by the USGS and MDNR group construction sand and gravel as a single commodity; therefore, it was not possible to disaggregate the proportion of sand versus gravel produced at individual mining operations or across the state. Accordingly, it was not possible to disaggregate sand and gravel production when developing estimates on available capacity at alternate sources. Without this type of information and supporting data, it was implicitly assumed that the breakdown of sand versus gravel produced from the LOMR is similar to that at alternate sources.
43B-004	Distances between mines and demand centers are estimated using great circle distances - or as the bird flies. This technique probably underestimates true travel distances and costs by 20 to 25 percent for most mines.	For modeling purposes, it was not possible to estimate shipping requirements using road network distances. Using straight-line distances is likely representative of the relative differences in shipping requirements from supply sources to demand centers. It is acknowledged that this shortcoming would result in an underestimation of potential increases in the delivered cost of sand and gravel as estimated by the transportation-cost model.
43B-006, 43B-012, 86-001,	The commenter states that the issue of the forward-linkages of the industry to the intermediate and final products of the	The benefits associated with forward-linkages to the sand and gravel industry are referenced on page 3.12-17 of the Draft EIS; however, a comprehensive and

Table 10.3-1 Comment-Response Matrix

Comment ID[a]	Comment	Response
88-001, 21-001	manufacturing (concrete in particular) and construction industries is noted, but not otherwise quantified or addressed.	quantitative analysis of forward-linkages was outside of the scope of the study. To address this issue, a planning-level analysis of the concrete manufacturing and construction industries in Missouri has been conducted as part of the Final EIS based on industry data from the IMPLAN regional economic model. The objectives are to understand (1) the linkages between construction sand and gravel production (and related truck transportation services) with the ready-mix concrete manufacturing sector; and (2) the linkage between concrete manufacturing and the construction sector. The analysis is based on the production functions characterizing these sectors in the IMPLAN model, which relate the output of an industry to the amount of inputs, typically capital and labor. The production function for ready-mix concrete manufacturing (IMPLAN Sector 161) shows that sand and gravel production and truck transportation play significant roles in the production and cost of concrete. Specifically, for every $1 of concrete production, truck transportation services (for all commodity shipments) and sand and gravel production account for 9.9 percent and 7.5 percent of total cost, respectively. For this analysis, it was necessary to isolate truck transportation services related specifically to sand and gravel. This was accomplished by allocating truck transportation costs across three primary inputs to production requiring transportation services, namely sand and gravel, cement, and natural stone. Based on this allocation, it was estimated that truck transportation requirements attributed directly to sand and gravel account for approximately 2.5 percent of total production costs for ready-mix concrete. As described in the Draft EIS, the anticipated increases in the delivered costs of sand and gravel are driven primarily by changes in shipping requirements and related costs due to production shifts to more-distant sources of supply. FOB costs of sand and gravel are expected to change only minimally based on price differentials across regions in the state. Under the No Action Alternative (the worst-case scenario for cost increases), the greatest increases in the delivered costs of sand and gravel are expected in the St. Joseph market area, followed by Waverly, Kansas City, Jefferson City, and St. Charles. Excluding the FOB price for sand and gravel, it was estimated that, under the No Action Alternative, transportation costs would increase between 45 percent in the St. Charles market area and by as much as 11-fold (1,118 percent) in the St. Joseph area. Based on anticipated increases in shipping costs and the production function for concrete manufacturing, it was estimated that elimination of dredging under the No Action Alternative would increase concrete costs in all market areas, including St. Joseph (+28.5 percent), Kansas City (+18.2 percent), Waverly (+18.2 percent), Jefferson City (+11.9 percent), and St. Charles (+1.2 percent). These cost increases would be internalized in the industry in the form of reduced value added (including proprietary

Table 10.3-1 Comment-Response Matrix

Comment ID[a]	Comment	Response
		income) and/or passed on to customers and other industries that rely on concrete as an input to production (e.g., the construction industry). In the case where costs are passed on the construction industry, an increase in construction costs would result from eliminating dredging on the LOMR. The production function for construction of new non-residential structures (IMPLAN Sector 36) shows that ready-mix concrete accounts for approximately 2.5 percent of total construction costs. By applying the percentage changes in concrete costs presented above to the production function coefficient for sand and gravel in the construction industry, it was estimated that construction costs in Missouri would increase by less than 1 percent in all market areas – St. Joseph (+0.7 percent), Kansas City (+0.5 percent), Waverly (+0.5 percent), Jefferson City (+0.3 percent), and St. Charles (+0.03 percent). To the extent that construction projects are more reliant on concrete, such as road construction, the estimated increases in construction costs would be higher. Similar to the concrete sector, these costs can be internalized within the construction industry and/or passed on to consumers. For public agencies with fixed funding, higher costs could result in decreased construction activity. The economic analysis presented in the Draft EIS assumed that increases in costs would ultimately be passed on to consumers, which would affect income levels, spending patterns, and regional economic activity. The results derived from using this approach serve as a proxy for the regional economic impacts associated with reduced activity in the concrete manufacturing and construction sectors.
43B-013	The commenter suggests that the average price for construction sand and gravel supposedly reflect prices of sand and gravel used specifically in concrete and asphalt production. However, because they are significantly less than the over-the-scale prices at the existing sand plants, they must exclude some component of the true FOB market price.	The prices used in the economic analysis have been derived directly from USGS reports for construction sand and gravel in the State of Missouri, adjacent states, and the United States. It is understood that these values represent FOB prices (i.e., "over-the-scale") and exclude shipping cost. Regional differences in prices were accounted for by using prices for USGS districts across the state. In addition, only prices for concrete and asphalt sand and concrete were used. It may be possible that prices reported by the USGS may be lower than expected due to the aggregation of construction sand and gravel as a single commodity. However, because average FOB construction sand and gravel costs are not expected to change significantly (there are minor changes based on regional price differences), nearly all of the anticipated increases in the delivered costs reported in the Draft EIS are based on increases in transportation costs. As such, baseline sand and gravel costs do not appreciably affect the manner in which production patterns change or the relative differences in economic impacts across project alternatives.

Table 10.3-1 Comment-Response Matrix

Comment ID[a]	Comment	Response
43B-014	The commenter has provided data on sand and gravel prices that are at variance with prices used in the Draft EIS analysis.	Table 3.12-8 in the Draft EIS shows the quantity, value, and price (in metric tons) for construction sand and gravel produced in the State of Missouri. This table includes all uses of construction sand and gravel in the state. The values shown in Table 3.12-11 for LOMR production are based on prices for construction sand and gravel used in concrete and asphalt manufacturing only, which are lower than the average price for all uses. Based on USGS data, the weighted price for sand and gravel used in concrete and asphalt production (weighted by tonnage produced for these two commodities in the state) is approximately 91 percent of the value/price for all construction sand and gravel uses. This difference explains the variation in prices noted by the commenter.
43B-015	The commenter states that there is a discrepancy between FOB prices for the entire market area ($4.91 per ton) and FOB prices for the Jefferson City market area ($6.00-$6.30 per ton), and that this discrepancy, over 28 percent, indicates that either the EIS estimates are in error or that prices for sand in other river segments are significantly lower.	There is no reference to the range in FOB prices for Jefferson City ($6.00 – $6.30) presented in the Draft EIS. There are slight variations in FOB prices for materials produced in the various market areas; price variations are based on regional price differences estimated by the USGS. The average FOB price for construction sand and gravel produced in the Jefferson City market area is $5.22 per ton.
43B-017	The commenter suggests that the Dredgers are not able to provide representative shipping cost data as stated in the Draft EIS.	Information on representative shipping costs for construction sand and gravel was obtained from interviews with the Dredgers in October 2009. While most dredging operations sell their products FOB at the plant site and do not provide transportation, they maintain an awareness of transportation costs in order to competitively price their product in the marketplace. In addition, these costs were supported by information presented in the public scoping letter from the MDNR (dated January 29, 2009) that estimated shipping costs at $24 per ton for a distance of 200 miles, which equates to $0.12 per ton per mile. For this analysis, it was conservatively assumed in the transportation-cost model that shipping costs were $0.20 per ton per mile, which falls into the high end of the range.
43B-018	The commenter states that the imposition of restrictions on output would, in general, create a situation where average total cost exceeds price, thereby causing current facilities to operate at a loss. They also note that the imposition of output limits would also put upward pressure on the market prices for construction sand and gravel, and while the net effect of these off-setting pressures would be dependent upon the actual costs of each producer, the greater the restriction the more likely that the facility would not be economically viable.	Comment noted. The economic evaluation presented in the Draft EIS is not intended to be a micro-level financial analysis of individual dredging operations; instead, the analysis focuses on regional economic effects that affect the public as a whole. It is acknowledged that average cost would increase with reductions in output and that market forces may pressure prices to increase, and therefore, the net effect on the financial viability of individual dredging operations is unknown.

Table 10.3-1 Comment-Response Matrix

Comment ID[a]	Comment	Response
43B-020	The commenter suggests that MDOT requires that all sand for a project come from a single plant.	This statement in the comment is not correct. Based on personal communication with MoDOT staff on December 14, 2010, there is no such requirement. MoDOT only requires that contractors designate the source of materials and that those materials pass QA/QC guidelines prior to use.
43B-022, 43B-023	The commenter suggests that the area shown on mining permits overstates the actual area mined.	It is not possible to determine the area of actual mining activity relative to permitted area based on permit information maintained by MDNR. Further, the analysis of expansion capacity at alternate land-based mining operations is based on estimated tonnage (not acreage) produced by land-based operations under current conditions relative to peak levels in 2006. The relative size of these operations was used to allocate excess production capacity across mines. As a result, the estimated expansion capacity of land-based mining operations presented in the Draft EIS is valid.
43B-023	The commenter suggests that implicit in the estimates of excess capacity at alternate mining sources is that the number of mines has remained at 2006 levels.	The analysis of excess sand and gravel mining capacity does not assume that the number of mines has remained constant over time, but instead that production could expand to peak 2006 levels either by increasing the output per acre and/or increasing the number of acres in production at existing mining operations. This assumption is reasonable given that mine operators typically permit a sufficient acreage for planned ultimate mine development but maintain only a portion of the acreage in production to serve ongoing production capacity requirements. Also see response to Comment 43B-022.
43B-024	The commenter states that implicit in the estimates of excess capacity at alternate mining sources is that the potential supply from open-pit and instream mines without production caps has not been exhausted.	Comment noted. This is an implicit assumption in the economic evaluation. It was not possible to evaluate the sand and gravel reserves at each mining operation considered in the analysis. It is unlikely that sand and gravel reserves at existing mining operations have been depleted. To the extent that some mines will have depleted their reserves prior to the need for added production in response to reduced LOMR production, it is possible that other mining operation with abundant reserves would make up the difference.
43B-025	The commenter states that implicit in the estimates of excess capacity at alternate mining sources is that the permitted values for the mines with capacity limits are actually indicative of their potential output.	Comment noted. This is an implicit assumption in the economic evaluation. It was not possible to evaluate the potential output at each mining operation considered in the analysis. It is plausible that maximum permitted levels at mining operations with production limits represent a reasonable indication of potential output.
43B-027	The commenter believes that the economic analysis relies on the assumption that any increases in transportation costs for sand and gravel from alternate sources could be passed on to consumers (price elasticity).	The price elasticity (the degree to which demand for materials such as sand and gravel is responsive to changes in prices that may be driven by changes in production/transportation costs) for sand and gravel in the region is unknown. To the extent that substitutes are readily available, the elasticity would be higher as consumers would replace the use of sand and gravel with other materials. However, because there

Table 10.3-1 Comment-Response Matrix

Comment ID[a]	Comment	Response
		are limited alternate supplies of sand and gravel, price elasticity is likely to be relatively low. The price elasticity for sand and gravel is also driven by the elasticity for the products for which sand and gravel are used as an input to production, such as the construction industry. For this analysis, it was assumed that the construction industry would pass along the increased costs to consumers of residential and non-residential construction, resulting in economic impacts associated with reductions in income levels of consumers. It is acknowledged that, alternatively, the construction industry could internalize these costs and/or be forced to limit construction activity in response to reductions in demands for construction services; this could also generate regional economic impacts. Given the limited information available, it is not possible to predict how the market would respond with sufficient precision to incorporate such a forecast into the generalized analysis of regional economic effects included in the Draft EIS.
44-40f	Page 2-60 Table 2.6-1 Summary of Impacts of the Proposed Action and Alternatives This rote exercise in tabulation is flawed and should be completely redone because of the following errors: 6. Incorrectly determines that regional sand prices will decrease with pit mining.	The commenter states that Table 2.6-1 (Summary of Impacts of the Proposed Action and Alternatives) incorrectly determines that regional sand prices will decrease with pit mining. Table 2.6-1 does not make this statement. The summary table does state that the combined value of production in the mining sector, truck shipping sector, and sectors supported by household spending would decrease in the primary market area under all alternatives, except Alternative C. Economic activity would, however, shift to other parts of the state. The economic analysis concludes that the delivered cost of construction sand and gravel in the primary market area would generally increase with reductions in dredging allocations on the LOMR; see Table 4.10-2.
44-40g	The commenter states that Table 2.6-1 (Summary of Impacts of the Proposed Action and Alternatives) incorrectly assumes that utilization of alternate sources only result in minimal increased traffic even though they are obviously more distant from the market.	Based on the results of the transportation-cost model, there would generally be an increase in shipping distances in cases where alternate sources are utilized to replace construction sand and gravel from the LOMR. The increase in transportation requirements are reflected in the estimated short-term delivered costs of construction sand and gravel presented in Table 4.10-2. As stated in Section 4.3, "Navigation and Transportation," in general, truck traffic would increase in areas near alternate sources. Annual haul truck trips would be expected to increase on the major transportation corridors near the alternate source facilities. Because it is not yet known which of the existing alternate sources would be used to replace sand and gravel otherwise dredged from the LOMR, the roadways that may be affected cannot be identified, and the extent of change in traffic on these roadways cannot be estimated. However, these mining operations currently provide sand and gravel to urban market areas via haul trucks, and it was assumed that the trucks have direct access to the state and interstate highway system from these sites and that they use major transportation corridors. In general, major transportation corridors (i.e.,

Table 10.3-1 Comment-Response Matrix

Comment ID[a]	Comment	Response
		interstate and state routes and U.S. highways) have relatively large traffic capacities; therefore, it is unlikely that any increase in haul truck traffic from these alternate source locations due to increased operations would adversely impact traffic circulation.
44-40m	Page 2-60 Table 2.6-1 Summary of Impacts of the Proposed Action and Alternatives This rote exercise in tabulation is flawed and should be completely redone because of the following errors: 13. Incorrectly assumes that Missouri's economy is better off with more sand trucking rather than union scale river dredging crews	The commenter states that Table 2.6-1 (Summary of Impacts of the Proposed Action and Alternatives) assumes that Missouri's economy is better off with more sand trucking rather than union-scale river dredging crews. However, the Draft EIS does not make this judgment. Instead, the economic analysis indicates that the construction sand and gravel industry, as a whole, would not experience a substantial adverse economic impact because mining production would shift from the LOMR to other alternate sources in the region. The truck shipping industry would experience a corresponding increase in economic activity due to increased transportation distances associated with moving sand and gravel from more distant supply sources to demand centers. There would also be a corresponding decrease in economic activity attributed to the increased cost of sand and gravel in the region. The Draft EIS does not make a judgment regarding the importance of one industry versus another to the economy in the State of Missouri.
86-002	The commenter suggests that reductions in LOMR dredging will have a negative economic and employment effect of the City of Columbia, Missouri.	It is acknowledged that there is the potential for adverse impacts on business attraction in areas subject to an increase in the delivered cost of sand and gravel due to reductions in allowable dredging on the LOMR.
94-001	The commenter states "We provide roughly 90 percent of the product used in infrastructure in out-state Missouri, and eliminating us as a source would be a negative impact on the entire central Missouri region in jobs as well as a competitive bid that would allow them to bring new businesses to our area and continue to develop our infrastructure system."	See response to Comment 43-023(AS). The Draft EIS also provides a comprehensive analysis of job-related impacts attributed to changes in mining production, shipping requirements, and increases in the cost of sand and gravel in the region.
94-002	The commenter states "… the loss of jobs is not only just our employees, but the loss of related jobs that our products provide would be a negative economic impact to the region in loss of revenues and state sales tax."	Comment noted. The economic analysis presented in the Draft EIS includes quantified effects on direct employment at LOMR dredging operations, indirect and induced employment in the State of Missouri, and mining operations. It also presents quantified impacts on sand royalties paid to the State of Kansas and a qualitative analysis of sales tax revenues in Missouri.
Comment Category: Noise		
43-049	Page 2-77, paragraph 4, Noise. "…increase in long-term noise exposure…." – This will not result in any increase in noise when using the highway standards from the MoDOT or the Kansas Department of Transportation ("KDOT").	KDOT highway noise standards apply to traffic noise analysis associated with Federal-Aid Highway projects, based on the requirements of 23 CFR 772. As discussed on page 3.13-4 of the Draft EIS, these standards are based on peak-hour highway traffic volumes and cannot be applied to noise from dredging and processing activities in any meaningful way. Operation of dredging equipment in areas where there currently is no

Table 10.3-1 Comment-Response Matrix

Comment ID[a]	Comment	Response
		dredging and operation of new processing facilities will likely increase noise in those areas regardless of what noise standards are used.
43-054	Page 2-79, paragraph 3, Noise/Visual and Aesthetic Resources. "…new facilities that are developed." – There are no known noise complaints in any jurisdiction relating to current dredging on the river.	The lack of noise complaints does not mean there are no noise impacts, and it is not a standard by which noise impacts from industrial operations are evaluated. As an example, an employee of a dredging company that is impacted by noise may choose to not complain. The impact assessment approach used in this analysis is consistent with previous dredging noise studies conducted by the USEPA and the USACE, and is considered reasonable and appropriate for this Project.
43-088	We believe the appropriate methodology for comparison of noise limits is that of the State of Kansas DOT and the State of Missouri DOT. In both cases, single sources, while a receptor, would not be the benchmark and that either state would prepare a noise reduction strategy for an individual unit. We believe the appropriate method for this analysis is actual sampling. Pilot studies could have also further verified comparisons. We believe the noise analysis provided in this study is exaggerated. The methodology for potential increase in production and its extrapolation is not consistent with the nature of the floodplain and obstructions within the floodplain. There is no complaint analysis or any effort to determine actual complaints by citizenry throughout the basin. We are not aware of any dredger having a noise complaint regarding its operations. In addition, no comparisons appear to be used to contrast potential noise factors. As an example, Capital Sand's plant is located immediately adjacent to the Jefferson City Municipal Airport. This airport handles private aircraft, both propeller and jet driven, and helicopters for the Missouri Air National Guard. The plant is located immediately adjacent to U. S. Highway 54 and a bridge crossing the Missouri River with four lanes of traffic at 60 mph. The Union Pacific main line and rail yard is immediately adjacent to the river on the opposite bank. In addition, U. S. Highway 63 with four lanes of traffic at 70 mph parallels the river way. Other facilities are similarly situated. The BSNP is presently under capacity. This analysis should have assumed full capacity for navigation and full operational capability. The addition of the nominal number of barges and tows,	KDOT and MoDOT highway noise standards apply to traffic noise analyses associated with federal-aid highway projects based on the requirements of 23 CFR 772. These standards are based on peak-hour highway traffic volumes and cannot be applied to noise from dredging and processing activities in any meaningful way. Noise sources are not receptors so the point of this comment is not clear. Noise abatement strategies identified in KDOT and MoDOT noise policies and in 23 CFR 772 are applicable to highway projects, not dredging activities. Given the scale of the Project and the level of detail determined appropriate for the assessment, it was impractical to conduct field studies to characterize noise levels at existing facilities. The approach and level of detail used in the analysis is considered reasonable and appropriate, and provides appropriate disclosure of potential impacts. Noise complaints or the lack thereof are not a standard by which noise impacts from industrial operations are evaluated. The impact assessment approach used in this analysis is consistent with previous dredging noise studies conducted by the USEPA and the USACE, and is considered reasonable and appropriate for this Project. Section 3.13.6 has been amended in the Final EIS to acknowledge that aircraft and trains are intermittent sources of noise near airports and train tracks. The discussion already acknowledges traffic on roadways and highways as a source of noise. The approach to the noise analysis suggested in this comment is impractical given the scale of the Project. The approach taken provides a reasonable worst-case assessment of potential noise increases based on standard acoustical modeling methods.

Table 10.3-1 Comment-Response Matrix

Comment ID[a]	Comment	Response
	conveyors, trucks, and loaders is likely to be lost in the din of the other activities. At a minimum, these factors should be noted in the document and qualifying statements provided.	
43-141	Both MoDOT and KDOT noise guidelines, which are approved by FHWA, provide for specific mitigation for adjacent noise sources. The limited number of sensitive receptors presented in the report can be mitigated. MoDOT and KDOT standards should be applicable for all items for noise in this document.	KDOT and MoDOT highway noise standards apply to traffic noise analysis associated with federal-aid highway projects based on the requirements of 23 CFR 772. These standards are based on peak-hour highway traffic volumes and cannot be applied to noise from dredging and processing activities in any meaningful way.
43-142	There are no known complaints in any public record of noise from either river-based or land-based operations for the dredgers. This is not noted in the document. Appropriate comparative analysis and assessment of cumulative impacts and whether any increases would cause a discernable difference is a necessary element for this study. The lack of complaints is evidence that the public expectations have been met. These are not pointed out in this analysis, and it should be corrected accordingly.	The lack of noise complaints does not mean there are no noise impacts and is not a standard by which noise impacts from industrial operations are evaluated. As an example, an employee of a dredging company that is impacted by noise may choose to not complain. The impact assessment approach used in this analysis is consistent with previous dredging noise studies conducted by the USEPA and the USACE, and is considered reasonable and appropriate for this Project.
Comment Category: Visual and Aesthetic Resources		
43-090	Page 3.14-1, paragraph 4. "These operations introduce barges and heavy equipment into the view shed of the river, a valued visual resource, and detract from views associated with the river itself." – We disagree. Barges and tows are heavily photographed and are part of the landscape and Americana. The river itself is designed for these views.	There is a vast range of individual viewer response; some viewers would concur with the commenter and some would not. Valuation of viewer response was based on accepted BLM, USFS, and FHWA methods of analysis and professional experience gained in comparable visual environments.
43-091	Page 3.14-1, paragraph 4. "Viewer groups affected by dredging activities include residents in riverside communities and recreationists along the Project segments in rural and developed areas, who have a higher sense of ownership of views of the river." – This statement should be removed from this document. We are not aware of one complaint by "residents in riverside communities and recreationists" regarding visual impairment. In addition, once again, these individuals are cast in God-like priority. Congress has determined that the very items presented in this paragraph are what the river is designed to serve. The	Comment noted. This portion of text identifies the existing viewer groups that would be affected by the Project. "Affected" could be a negative or a positive visual change; no statement is made to either effect. Based on accepted methods of visual analysis used by the BLM, USFS, and FHWA, residents and recreationists experience extended viewing times over a landscape and have a stronger sense of ownership over such views than a passing driver who experiences a fleeting view. Describing existing viewer groups, viewer response, and viewer sensitivity is a widely accepted method of visual analysis.

Table 10.3-1 Comment-Response Matrix

Comment ID[a]	Comment	Response
	differentiation of activities throughout the river is inconsequential and overstated in this section.	
43-092	Page 3.14-1, paragraph 4. "Those employed at riverside places of business and industrial areas and motorists using adjacent roadways are moderately affected by dredging operations because, thought they value views of the river, they are more focused on work or driving activities when viewing dredging operations. Agriculture areas are least affected by dredging operations because visual access to dredging operations is often limited by the presence of vegetation along the riverbanks and the absence of visual access points." – This assessment is misguided. Missouri water quality standards were designed to discourage recreational boating on the river due to the risk with the primary Authorized Purpose—barges and tows. This mentality is exactly what Missourians object to. This section should be removed from the document.	The comment quotes a portion of the visual impact assessment and then makes reference to the relationship between boating and Missouri River water quality. The section of text referenced addresses views from places of businesses, industrial areas, and agricultural areas that are all land-based views. There is no reference to recreational boating in this section of text.
43-093	Page 3.14-3. The authors mischaracterize the expectation with regard to the SCORP. They represent that the SCORP is a decision document when comparing other economic uses. It is a mischaracterization that the SCORP represents the views of the combined citizens of this state as a decision document.	Section 3.14.2.2 clearly states that "The SCORP is used as a reference by local community recreation planners, park departments, and the MDNR Grants Management staff when considering grant applications for funding from the Land Water Conservation Fund, the Recreational Trails Program, and other outdoor recreation funding agencies and sources."
43-094	Page 3.14-9. Dredgers have the most dominant view of the river. No dredgers were interviewed during this exercise	The commenter suggests that dredgers have the most dominant view of the river. However, local residents would have more extended viewing times. Formal interviews in regard to visual resources were not conducted for any viewer group.
43-095	Page 3.14-11. "Viewer sensitivity is high among recreationists because they are more likely to regard the natural and built surroundings as a holistic visual experience." – The river was "built" for the Authorized Purpose of navigation and flood control. There is no explanation of the highest visual and aesthetic navigation and flood control scenario in the document.	While the river is an authorized navigation and flood control project, recreationists use the river and generally regard the natural and built surroundings more holistically.
43-096	Page 3.14-12, paragraph 2. "Residential areas along the river tend to be large, stately homes that are located higher up on the river's banks, with elevated views out over the river and its lush riparian corridor." – These large homes block the view of the river and dominate the river's skyline. While they admire the view, they rob	The text describes the existing visual condition and existing views from industrial uses, residential, and open spaces. Stating that these homes rob views is highly subjective and emotionally based. These viewers are the existing primary viewers at those locations and cannot be left out of the analysis because they block views for viewers behind them.

Table 10.3-1 Comment-Response Matrix

Comment ID[a]	Comment	Response
	others of the visual aesthetic and grace of the bank. Those who impair the view should not be given deference for the view they have taken.	
43-143	Page 4.12-4, paragraph 3. "In addition, indirect visual impacts may result from changes in river bed elevations." – Bed degradation has absolutely no impact on visual aesthetics.	River bed degradation would result in indirect effects that could affect boat ramp accessibility and could have structural implications for bridges. If such indirect effects occur, visual resources may also be affected by limiting, modifying, or taking away visual access for an indefinable period of time until access can be restored.
43-144	Page 4.12-6, paragraph 2. "The noise and movement associated with dredging operations would draw viewers' attention to these areas." – The authors fail to recognize that the base visual acuity is an airport, a sewage treatment plant, and two major four-lane highways along with a major rail yard which already alter the visible landscape. This is a typical example of the failure to recognize the existing realities and over-exaggerating a problem.	Text has been revised in the Final EIS to address these existing noise sources. Even with the existing noise sources, the dredgers will attract viewers' attention, as an additional source of noise and motion. This is not an over-exaggeration, but a fact that noise and motion attract someone to view the source; barge operations would elicit the same response.
43-145	Page 4.12-8, paragraph 1. "Construction of any new facilities needed to support long-term demand would create temporary changes in views…." – These views are as permanent as the sand plants. We do not understand why these temporary views and the sand plants are not both considered permanent.	This discussion appears in the section titled "Visual Impacts from New Construction." This deals strictly with the process of construction. Permanent impacts from alternate sources are described for all alternatives under the following headings: "Changes to Scenic Vistas, Scenic Routes, or Existing Visual Character or Quality" and "Changes in Light or Glare."
Comment Category: Cultural Resources		
04-033	The comment suggests coordination with the NPS if a PA to protect cultural resources is developed.	If it were determined that cultural sites were adversely affected by headcutting or erosion related to dredging-associated river bed degradation, such effects may be further assessed under a PA. As a consulting party, the NPS would be given the opportunity to provide comments during development of a PA, should one be required.
05-006	The comment provides additional information on the presence of historical bridges.	A letter from Kevin Keith, MoDOT Interim Director, dated September 3, 2010, that provides additional information on historic bridges in the Project area is included in Appendix F of the Final EIS.

Table 10.3-1 Comment-Response Matrix

Comment ID[a]	Comment	Response
43-146	The comment suggests that dredging activity cannot affect cultural resources.	To the extent that river bed degradation contributes to headcutting and erosion, it may expose and affect cultural resources. Because the Environmentally Preferred Alternative is not expected to result in more than minimal bed degradation or head cutting, it is not expected to adversely affect cultural resources.
44-48	The comment objects to discussion of potential cultural impacts based on data available.	While dredging is not the sole cause of bed degradation, dredging-related headcutting and erosion may destroy or expose cultural resources. If cultural sites were adversely affected by headcutting, erosion, or construction of proposed sand plants, further geomorphic study would be undertaken to evaluate and assess those impacts, and a PA would be developed to address cultural resources.
Comment Category: Air Quality and Climate Change		
06-012	Section 3.16 – Table 3.16-2 on page 3.16-5, the first bullet point under Table 3.16-2 incorrectly states the State's Construction Permit rule. It is listed in the draft EIS as 10 CSR 10-6.050 Construction Permits. This should be corrected to read, 10 CSR 10-6.060 Construction Permits Required.	Table 3.16-2 has been corrected with this information in the Final EIS.
06-023, 45-053	The comment states that information in Section 4.10, Economics and Demographics, indicates a significant impact related to the air quality and climate change analysis. The comment further asserts that these impacts would primarily be associated with the extended hauling time from the alternate source locations.	Changes in travel patterns associated with hauling sand and gravel from the onshore facilities and alternate source locations would affect criteria pollutant emissions and GHG emissions. The EIS quantifies changes in emissions relative to existing conditions associated with sand and gravel hauling within the primary market area (refer to page 4.14-3 and the emissions impact tables). As stated for other sources discussed in Section 4.14, the emissions associated with hauling sand and gravel to alternate source locations cannot be reliably quantified because it is unknown how implementation of the Proposed Action would affect the number and length of truck trips, as well as the vehicle fleet distribution. Consequently, haul truck emissions associated with travel to alternate source locations are included in the qualitative assessment of air quality impacts at alternate source locations (refer to Section 14.4.4). Because it is difficult to determine how utilization of alternate sources would affect total air pollutants (including contributions from increased sand and gravel hauling), the EIS concludes that the majority of air quality impacts would be adverse at alternate source locations.
06-024	Comment suggests a discrepancy in the discussion of Table 4.14-3.	The comment is incorrect. The Proposed Action does not exceed the de minimis threshold in St. Charles. While total Project-related emissions equate to 100.66, the delta between the Project and existing conditions is only 64.00. This is the value we compare to the threshold of 100 tons per year. Consequently, the threshold is not exceeded in St. Charles County.

Table 10.3-1 Comment-Response Matrix

Comment ID[a]	Comment	Response
06-025	The comment requests that construction emissions be added to Table 4.14.-1	The Draft EIS inadvertently omitted VOC and NO_x from Table 4.14-1. These emissions have been added to the table in the Final EIS. Neither of these pollutants exceed the applicable thresholds.
06-026	10. Section 4.14 – Air Quality and Climate Change The Department recommends, to the extent practicable, that the use of heavy construction equipment and commercial towboats and dredge boats should be limited on days with orange or red Air Quality Indices (AQI). High AQI represent potentially poor air quality days in the St. Louis area. This action would ensure that these diesel engines do not contribute to future ozone and PM2.5 exceedances. Additionally, if practical, the use of diesel engines and equipment that have been retrofitted with a diesel oxidation catalyst or other air pollution control device would further reduce the mobile source emissions related to the project.	The comment suggests that the USACE permits limit the operation of heavy construction equipment on days with orange or red air quality indices and require that equipment be retrofitted with diesel oxidation catalysts or other air pollution control devices. The comment asserts that such mitigation would ensure that diesel engines do not contribute to future ozone and PM2.5 NAAQS exceedances. The USACE agrees that limiting equipment usage on poor air quality days might benefit local air quality. Diesel oxidation catalysts also represent another potential mitigation (in addition to those specified in Section 6.4.6) that may be used by dredging companies. While these additional mitigation measures might contribute to meaningful reductions in emissions, without concentration-based modeling and specific information on which strategies will be implemented by which companies, it cannot be determined with certainty that exceedances of the NAAQS will be avoided (as suggested by the commenter). The Final EIS describes the anticipated consequences of the proposed and alternative actions and identifies the Environmentally Preferred Alternative that balances the various public interests including the need for aggregate and the need for a stable river system providing other services including water supply . The Final EIS does not, however, determine what will or will not be permitted. That decision will be based on the Environmentally Preferred Alternative but with modifications determined through the permit evaluation process required by Section 404(b)(1) of the Clean Water Act. The factors considered (including these public comments) and conclusions reached in that process will be described in the Record of Decision that will be published no sooner than 30 days following the publication of this Final EIS.
06-027	10. Section 4.14 – Air Quality and Climate Change Plans. It is noted that the USACE has made the general conformity determination for ozone in the St. Charles segment of the proposed project as well as the alternative projects; however, no conformity determination has been made for PM2.5 or carbon monoxide in the St. Charles segment of the proposed project or the alternatives.	The comment notes that the USACE has made a conformity determination for ozone but has made no such conclusion for PM2.5 and CO. As discussed in Section 3.16.2, conformity determinations are required only for areas classified as nonattainment or maintenance for the NAAQS. According to the latest USEPA determinations (http://www.epa.gov/oar/oaqps/greenbk/), the action area is classified as nonattainment only for ozone. A portion of St. Louis County is classified as a maintenance area for the CO standard. However, the maintenance area was between I-207 and the Mississippi River, which is south of the action area. A conformity analysis for PM2.5 and CO is therefore not required.

Table 10.3-1 Comment-Response Matrix

Comment ID[a]	Comment	Response
06-028	10. Section 4.14 – Air Quality and Climate Change Plans. Heavy Duty Diesel Vehicle Idling - State regulation 10 CSR 10-5.385 restricts heavy duty diesel vehicles with a gross vehicle weight greater than 10,000 pounds that operate in the counties of Franklin, Jefferson, St. Charles and St. Louis, and the City of St. Louis from idling more than five (5) minutes in any sixty (60) minute period except as otherwise exempted from the rule.	The comment describes the new state regulation 10 CSR 10-5.385, which places restrictions on heavy-duty vehicles in the counties of Franklin, Jefferson, St. Charles, and St. Louis. The USACE agrees that this regulation is applicable to the Proposed Action and has added a summary of the regulation to Table 3.16-3 in the Final EIS.
06-029	The comment describes state regulation 10 CSR 10-6.170 and recommends that all efforts be made to reduce fugitive dust that may result from proposed construction, dredging, and transport.	The state regulation is presented in Table 3.16-3. A sentence has been added to the text of the Final EIS to explicitly indicate that dredging activity must comply with all applicable regulations.
43-050	Page 2-77, paragraph 7, Air Quality and Climate Change. The impacts on the St. Louis air shed would strictly be involving those dredgers who are in the St. Louis SIP area. St. Louis dredgers are already authorized for the amounts in the proposed alternative. There is no increase. This is not accurate.	The comment argues that no change in emissions would result from the Proposed Action as dredgers in the St. Louis air shed are already authorized to dredge amounts proposed as part of the Proposed Action. Under the Proposed Action, Limited Leasing Company is requesting authorization to extract 1,200,000 tons annually, and J.T.R., Inc. is requesting 1,550,000 tons annually (see Table 2.2-1). Although this is the same amount that they were previously authorized to extract, from 2004 to 2008, Limited Leasing Company and J.T.R., Inc. extracted an average of 990,062 and 461,704 tons per year, respectively in the St. Charles segment. Additionally, Hermann Sand and Gravel Company, Capital Sand Company, and Edward N. Rau Contractor Company have requested authorization to extract an additional1,300,000 from the St. Charles segment. This increase in permitted tonnage would require corresponding increases in equipment usage and dredging activity, which would result in increases in air pollutants (as identified in the EIS).
43-053	Page 2-79, paragraph 2, Economics and Demographics. "…shifting of employment to the transportation sector (trucking)." – A shift to the transportation sector, particularly trucking, is relevant. An increase in GHGs and NOx needs to be addressed.	The comment requests that increased GHG and NOx impacts associated with increased trucking be included in the analysis. Please refer to the response to Comment 06-023. The EIS quantifies emissions associated with sand and gravel hauling within the primary market area. Emissions from sand and gravel hauling to alternate sources are included in the qualitative assessment of air quality impacts at these locations.
43-097	The comment argues that commercial dredging does not have a significant impact on regulated pollutants and that it provides a net benefit to emissions of GHGs.	The EIS fully evaluates criteria pollutant and GHG emissions related to the Proposed Action to the extent that information about emission sources is available. Based on the quantitative assessment of air pollutants, which was performed using emissions models and procedures approved by the USEPA, the Proposed Action is expected to generate substantial criteria pollutant emissions from dredging activities, relative to existing conditions. These emissions are a result of increased dredging activity, primarily burning of fuel by equipment engines. . In the St. Louis area, the Limited Leasing

Table 10.3-1 Comment-Response Matrix

Comment ID[a]	Comment	Response
		Company and J.T.R., Inc. would be permitted to dredge. From 2004 to 2008, these companies extracted an average of 990,062 and 461,704 tons per year, respectively. Under the Proposed Action, Limited Leasing is requesting 1,200,000 tons annually, and JTR is requesting 1,550,000 tons annually (see Table 2.2-1). Because dredging activities require the use of diesel-powered engines, increasing operating activities would result in a corresponding increase in criteria pollutant emissions. This conclusion is presented in Section 4.14 of the EIS. With regard to GHG emissions, an evaluation of commercial sand and gravel dredging relative to alternate forms of material extraction (i.e., replacing current yields with trucks) is beyond the scope of the EIS. Implementation of the Proposed Action would increase permitted dredging activities, relative to existing conditions, resulting in a corresponding increase in equipment activity, and thus GHG emissions. Use of trucks to replace current yields is not included as an alternative and therefore is not evaluated.
43-098	The comment requests deletion of the last sentence in paragraph 1 on page 3.16-12 of the Draft EIS.	The statement has been removed in the Final EIS.
43-157	The comment disputes the conclusion regarding cumulative increases in GHG emissions. The comment has three elements: (1) conversion of truck fleets for energy efficiency would result in reduced GHG emissions; (2) transportation costs would result in increased barge transportation; and (3) the only alternative that would result in increased dredging production is the Proposed Action.	Each element is responded to below. (1) The commenter is correct in stating that improvements in engine efficiency and fleet characteristics (e.g., increased renewable fuels and/or hybrid vehicles) would reduce future transportation-related GHG emissions. The cumulative analysis for GHG emissions spans the 5-year permit period (2011–2015). Emissions from on-road haul trucks were modeled with the USEPA's MOVE Model for the year 2011 as a worst-case scenario. This model accounts for engine efficiency improvements and fleet characteristics anticipated in the year 2011. Although emissions factors are expected to decrease in future years as result of these improvements, increases in the number of haul truck trips (as described in Section 4.15) outweigh any emissions benefits achieved from improved on-road engines. Consequently, GHG emissions from on-road transportation would increase as a result of the Proposed Action. (2) During the 5-year cumulative analysis time period, specific data on barge trips and haul truck trips were provided by the permit applicants and were used to quantify emissions. Increases in both haul truck and barge trips are anticipated under the Proposed Action, relative to existing conditions and were accounted for in the modeling. Because increases in both forms of transportation are anticipated, GHG emissions would increase as a result of increased engine activity. (3) The commenter is correct in stating that only the Proposed Action would result in increased permitted tonnage relative to existing conditions. As discussed in

Table 10.3-1 Comment-Response Matrix

Comment ID[a]	Comment	Response
		Section 14.4.4, this increase in sand and gravel production yields a corresponding increase in GHG emissions under the Proposed Action. Under the action alternatives, GHG emissions are anticipated to decrease along the LOMR as a result of reduction in the permitted sand and gravel volumes. However, as stated in Section 4.14.4, sand and gravel extraction at alternate source locations under the action alternatives would generate GHG emissions. Likewise, construction of new sand plant facilities as proposed by two applicants also would result in construction-related GHG emissions under the action alternatives. When combined with the emissions reductions achieved in the LOMR, all action alternatives would result in an increase in GHG emissions relative to existing conditions. Because any increase above current conditions is consider adverse, all action alternatives were determined to result in a potentially adverse impact on climate change. Table 5.3-2 has been revised in the Final EIS to include final GHG emissions calculated for the Proposed Action and action alternatives to help elucidate this conclusion.
44-40o	Page 2-60 Table 2.6-1 Summary of Impacts of the Proposed Action and Alternatives This rote exercise in tabulation is flawed and should be completely redone because of the following errors: 15. Fails to consider the impact to air quality of pit mine stripping operation and additional trucking from remote sites, all of which are not temporary. Fails to recognize that existing alternate sources would have to increase existing operations, and therefore emissions, proportionately.	The comment indicates that the summary of air quality impacts presented in Table 2.6-1 is flawed for the following reasons: (1) The analysis fails to consider operational emissions at alternate source locations; and (2) the analysis fails to consider emissions associated with increased trucking to alternate source locations. As discussed on page 4.14-5 of the Final EIS, the locations and types of alternate sources are currently unknown. Consequently, a quantitative air quality emissions analysis is not possible, and a qualitative assessment of potential impacts was therefore performed. Please refer to Section 4.14 for the qualitative analysis of emissions at alternate source locations. Note that all operational air quality impacts were found to be potentially adverse at alternate source locations due to the lack of project-specific information. For GHG emissions, a quasi-quantitative/qualitative analysis was performed, where the level of emissions generated at alternate source locations was assumed to be proportional to emissions generated on the LOMR, on a per-ton basis. However, as noted on page 4.14-19 of the Final EIS, if shipping distances increase, GHG emissions produced by hauling sand and gravel may be higher than those assumed to occur along the LOMR. Given the potential for increased shipping emissions, GHG effects were found to be adverse to ensure a conservative analysis.
50-018	Last paragraph: relevance of historical trends supports the need to assess effects of climate change on future trends.	Comment acknowledged. As stated in Section 5.3.2.1, a long term trend in increasing precipitation and flows may be an indication of climate change.

Table 10.3-1 Comment-Response Matrix

Comment ID[a]	Comment	Response
Comment Category: Cumulative Impacts		
43-062	Page 3.2-9, paragraph 3, last sentence. "Erosion of stream banks can result in (1) compromised use and value of adjacent riparian property; and (2) the need to rebuild sophisticated intake structures at the river's edge belonging to municipal, commercial, and industrial water users." – The same can be said of the Corps' notching program, which is specifically designed for the erosion of stream banks. The notching program causes compromised use and value of adjacent riparian property and the need to rebuild sophisticated intake structures at the river's edge belonging to municipal, commercial, and industrial water users. The USACE is affirmatively taking these actions to increase the amount of sediment in the lower channel. The failure to recognize the notching program is at best an error, at worst purposeful, in an effort to compromise commercial sand dredging. If these two purposes are so important, then the Corps should rebuild all the notches they have created in their structures that cause the erosion of stream banks.	Dike and bank notching can potentially affect adjacent riparian areas and intake structures. However, the USACE notching program evaluated the potential impacts of the project in accordance with NEPA and the CWA, and selected notching sites where privately owned riparian areas and intake structures were not likely to be impacted. The effects and interactions of the MRRP with the actions described in this EIS are included in Chapter 5, "Cumulative Impacts."
43-147	The cumulative impacts must be reconciled with the construction of the dams and reservoirs, the BSNP, and the operation and flow control of the USACE. The USACE's control of flow and the timing and volume of water provided the BSNP is the greatest influence on river bed load. A single decision that alters flow regime will change the cumulative effects.	Chapter 5, "Cumulative Impacts," describes and addresses the interrelationships among construction and operation of the Missouri River dams and reservoirs, the BSNP, and the Water Control Plan. In the cumulative analysis, the potential for changes in cumulative impacts was addressed, as was the uncertainty associated with future management decisions and findings of ongoing studies. As stated in Chapter 5, "The cumulative effects analysis is designed to explore the range of potential cumulative impacts, recognizing that uncertainty."
43-149	The removal of commercial sand dredging has extensive indirect and cumulative impacts beyond those related to dredging. These are not discussed in this document and can result in indirect impacts such as reducing navigation on the Mississippi River. The Corps should incorporate its knowledge presented under MRAPS in revision of this cumulative impacts analysis.	The Missouri River Authorized Purposes Study (MRAPS) is a broad-based, Congressionally authorized study to review the project purposes established by the Flood Control Act of 1944. The study will analyze the eight authorized purposes in view of the current basin values and priorities to determine whether changes to the existing purposes and existing federal water resource infrastructure may be warranted. This is a 5-year study process, expected to be completed in 2014. As stated in Chapter 5, "Cumulative Impacts," an evaluation of the current needs and problems in the study area could lead to consideration of operational and infrastructure alternatives. However, potential changes are not known nor are they reasonably foreseeable.

Table 10.3-1 Comment-Response Matrix

Comment ID[a]	Comment	Response
43-150	Page 5-10, paragraph 1. "By 2011, transportation funding drops by more than one-half and will continue falling to only one-third of the 2010 amount in subsequent years (MoDOT 2010)." – In contrast, planning continues for the expansion of I-70 to six or eight lanes of traffic. This single project would result in sand demands far in excess of the discussions in this document.	The comment states that transportation funding is declining, planning continues for the expansion of I-70 to six or eight lanes of traffic, and this single project would result in sand demands far in excess of the discussions in this document. For the purposes of the EIS, the demand for sand and gravel is based on historical data between 2004 and 2008. It was not possible to base demand on projections attributed to specific projects because that information was not readily available for all projects. However, the historical period used included a period of significant economic expansion and reflects demands generated by roadway projects when relatively higher funding levels were available.
43-154	Commenter suggests that in the No Action Alternative would result in cumulative impacts on navigation and implies that navigation should be a cumulatively-affected resource.	The criteria used to identify cumulatively affected resources are given on page 5-11 in the Draft EIS. Based on these criteria, navigation did not meet the criteria to be considered a cumulatively affected resource. Further, in the hypothetical example given by the commenter, the reduction in navigation on the river (e.g., movement of vessels carrying commodities) would be a direct impact of the action and not a cumulative effect.
43-155	Page 5-23, top of page. "If the moratorium on sediment disposal into the main stem LOMR is resolved and construction of restoration projects resumes in the short term, the effect of the additional sediment on the impacts from dredging described in Section 4.2 likely would be minor for several reasons." – We do not agree with this position. See Appendix A.	Comment noted.
43-156	Page 5-30, paragraph 2. "Nevertheless, it is anticipated that river bed degradation associated with commercial dredging has the potential to counteract some of the positive benefits associated with the habitat creation programs." – The authors wish to have everything both ways. This statement must be weighed against propagation factors such as cues produced by increased suspension in the water column and its impact on the pallid sturgeon's reproduction. In addition, the degradation discussion is not reconciled with the spring rise and flow modification provisions suggested in the BIOP. Finally, the high flow and low flow scenarios are just that—extremes. Comparison on this question is best considered on the mean, which is the more prevalent position. There is absolutely NO data that demonstrates the statement regarding potential to counteract positive benefits of habitat creation. Quite the contrary, it has the potential of	Most habitat creation is focused on creating shallow-water habitat, which is designed for a specific depth at specific flows. Degradation of the river bed and lowering of low-flow water surface elevations near shallow-water habitat restoration sites have the potential to reduce or eliminate flows and habitat function at these sites, as water surface elevations decrease at specified flows.

Table 10.3-1 Comment-Response Matrix

Comment ID[a]	Comment	Response
	increasing positive benefits associated with habitat creation programs.	
44-39	Page 2-56 2.5.4 Increasing Sediment Supply in the Lower Missouri River "Several commenters suggested various means for increasing the sediment supply in the LOMR. Specific suggestions included reconstructing channel chutes to reintroduce trapped sediments, and piping sand and gravel from upstream mainstem Missouri River dams via sediment slurry pipelines to move sediment accumulated in the reservoir back into the LOMR channel. This alternative does not meet the Project purpose and need because it does not supply the sand and gravel to support the regional construction and manufacturing needs." This is not true with regard to the channel chute construction projects. According to Michael Chapman, USCOE KCD, much of the material that is discharged into the River from chute dredging meets concrete sand specification. His opinion is that it would mitigate commercial dredging projects downstream of the projects (three of the five planned chutes are above KC). Chapman noted that we are talking about hundreds of millions of tons of sand. This is huge (200 million tons is 1260 mile-feet of River, 600 feet wide), and should be a noted as mitigation of degradation in the Draft EIS.	Construction of chute and shallow-water habitat and dike notching increase sediment discharge and loads on the LOMR, which could meet commercial dredging specifications. However, the USACE is conducting these restoration activities under the MRRP rather than for purposes of mitigating impacts from commercial dredging. Potential cumulative impacts on geomorphology associated with the MRRP are discussed in Section 5.3.2. The specific timing, location, and potential effects of sediment from restoration projects are beyond the scope of this EIS.
Comment Category: Mitigation		
03-011	Headcutting would be expected to proceed both upstream and downstream from a dredge location, resulting in an expansion of the zone of bed loss. These processes work counter to approaches which would not limit the overall extraction amount in the lower river and suspend dredging in only small segments of a larger river reach (e.g., Jefferson City [RM 140 – RM 150] and St. Charles [RM 0 – RM 50]) while allowing dredgers to simply shift concentrated dredging to just outside a degrading segment. We also suggest that any dredging in the LOMR exclude any use of cutter heads which provide access to more consolidated sediment and exacerbate bed loss.	Comment noted. Please see Section 2.7 in the Final EIS for a discussion of the Environmentally Preferred Alternative and Section 6.2.1 for a discussion of potential mitigation measures to reduce dredging intensity. Restricting the use of cutter-head dredges is considered as a potential mitigation in Section 6.2.2.

Table 10.3-1 Comment-Response Matrix

Comment ID[a]	Comment	Response
03-013, 03-012, 03-016, 03-004, 04-001, 09-001, 09-002, 09-003, 30-001,	Several comments identified issues that should be covered by an adaptive management plan. The issues include how to deal with future studies, future dredging permit applications, degradation limitations, dredging exclusion zones, monitoring, and tonnage limits.	The EIS describes the anticipated consequences of the proposed and alternative actions and identifies the Environmentally Preferred Alternative (See Section 2.7). However, it does not determine what will or will not be permitted. That decision is reached through the permit evaluation process required by Section 404(b)(1) of the CWA. The factors considered (including these public comments) and conclusions reached in that process will be described in the ROD that will be published no sooner than 30 days following publication of the Final EIS. Section 2.7 of the Final EIS identifies the Environmentally Preferred Alternative and discusses how it was identified. The alternative selected for each river segment would reduce or hold to a nominal level the negative environmental effects of dredging—particularly on river bed degradation, infrastructure, and environmental resources—while seeking to minimize negative socioeconomic impacts on the local and regional economy and sand and gravel industry. It was determined that the Environmentally Preferred Alternative should be the highest annual dredging amount that would result in no more than slight degradation in the short term and slight to moderate degradation in the long term in each segment. The selection of alternatives described in Section 2.7 as the Environmentally Preferred Alternative is based on the condition that dredging would be distributed more broadly throughout the individual segments. If dredging was not distributed more broadly and was allowed to remain concentrated around the existing sand plants, the level of future river bed degradation and associated direct and indirect impacts under the selected alternatives would be expected to be moderate to substantial and these segment-specific alternatives would not comprise the Environmentally Preferred Alternative. Section 2.7.4 describes the target levels for dredging intensity and how those limitations could be applied and implemented. The analytical basis for these target levels is discussed in Sections 3.4 and 4.2 and in Appendix A. Selection of the Environmentally Preferred Alternative is also based on the continued application of special conditions of the 2007 permit decision and subsequent permit extensions that establish dredging exclusion zones near various river infrastructure and habitat features. Those special conditions are fully discussed in Section 2.4.3. The Final EIS is intended to be used to evaluate the current permit applications for the existing and newly proposed dredging operations, and to provide a general basis for the evaluation of dredging permit applications over the next 20 or more years. The Environmentally Preferred Alternative for each segment and the dredging intensity targets, along with the existing special permit conditions, provide the boundaries within which future permits would be granted or denied. Permits will be issued for a period of 5 years, and all applications will be evaluated at the same time. In that evaluation every 5 years, the USACE will identify and assess pertinent new studies completed since the

Table 10.3-1 Comment-Response Matrix

Comment ID[a]	Comment	Response
		previous evaluation and prepare a supporting environmental assessment or supplemental EIS, if needed. Several comments recommended an adaptive management plan similar to the plan used to regulate Kansas River dredging; that plan establishes degradation limits and actions to be taken when the degradation limit is reached within the degraded portion of the river. Section 6.3 of the Final EIS discusses issues surrounding this proposal. The basis of the Environmentally Preferred Alternative is limiting annual extraction in a segment and within 1 mile to the level anticipated to result in no more than slight long and short term degradation (Section 4.2 of the Final EIS generally defines slight degradation as between zero and 2 feet). Restricting dredging in the LOMR as is done on the Kansas River is more problematic. Unlike the Kansas River, degradation on the LOMR results from various causes in addition to dredging, and the LOMR is a much larger and more dynamic river. The real challenge is how to determine what is actually degradation rather than seasonal and natural variation. In the Draft EIS, comparison of 12 annual low-flow water surface elevation data sets from 1974 to 2009 and HBED from 1998, 2007, 2008, and 2009 clearly demonstrated a trend of river bed degradation at the segment level during that time. The low-flow water surface elevation data are derived from actual water surface measurements taken every 2–3 miles; these data are then adjusted to the CRP flow based on the river stage and discharge concurrently calculated and recorded by the USGS at seven LOMR gage stations. Because of the distance between measurements, the inherent error in the USGS discharge calculation, and the potential source of error in normalizing the data to CRP flows (which is a model with its own inherent uncertainty and error), the low-flow water surface elevation data do not have the resolution and accuracy needed to monitor 1-mile increments of the river from year to year. However, the advantages of low-flow water surface elevation data are the period of record that is available, the ability to collect data on the water surface and use it to estimate gross changes in bed elevation, the low cost and effort for data collection, and thus the ability to monitor degradation trends over several years. The HBED is a much denser data set with over 20 cross sections per mile from which a fairly detailed topography of the river bed can be constructed. The number of closely spaced bed elevation measurements, when averaged, can help reduce measurement error. However, a rigorous statistical analysis has not yet determined whether the spatial density of sampling points and length of record are sufficient to estimate the spatial and temporal variability of bed elevations on the LOMR. Another disadvantage is the high collection and data processing cost, approximately $500,000 per annual survey.

Table 10.3-1 Comment-Response Matrix

Comment ID[a]	Comment	Response
		Based on these factors, HBED surveys may be sufficient to meet monitoring requirements for regulatory purposes, but a detailed statistical analysis of variation would be needed to determine adequacy. In addition, the high cost makes it impracticable to conduct a HBED survey annually. Section 6.3.1 of the Final EIS concludes that low-flow water surface elevation data should be collected every year and that HBED surveys should be conducted every 5 years for the lower 498 miles of the LOMR. These data would be used to identify reaches that continued to degrade over the previous 5 years to support adjustment of dredging in those reaches for the next 5-year permit cycle.
03-014	We also recommend that the Corps consider including reach-specific limitations for the dredging alternatives. Specifically, we recommend that dredging exclusion areas include the mouth of the Blue River at RM 358 to the confluence of the Little Blue River at RM 340 in order to minimize the extraction and mobilization of potentially contaminated sediment from the Blue River urban watershed.	The final mitigation measures beyond current permit conditions (as described in Section 6.1), which may include additional dredge exclusion zones, will be determined upon completion of the Section 404(b)(1) analysis and the ROD.
03-015	The comment suggests suspending dredging in reaches with acute degradation until they have recovered.	The USACE considered the degree of existing river bed degradation and the likelihood of future degradation while selecting alternatives for each segment when defining the Environmentally Preferred Alternative. This is described in Section 2.7, which has been added to the Final EIS. A discussion of potential mitigation and a monitoring and permit reevaluation process to allow dredging in currently degraded reaches while protecting resources is also described in Section 2.7 and in Chapter 6 of the Final EIS.
03-019	We recommend that the Corps evaluate the potential for increasing head cutting in tributary streams within Missouri River reaches which have suffered increasing bed loss, particularly with regard to the Kansas River for which a significant amount of data exist.	Comment noted. The effects of headcutting related to river bed degradation in the LOMR are discussed in Sections 4.2.2.4 and 4.2.3.4; these sections note that minimal data are currently available to evaluate this phenomenon. Information is available for the Kansas City reach, which includes the confluence with the Kansas River, and this information was considered in the analysis. Additional data may become available from the monitoring program described in Section 6. The proposed monitoring and adaptive management framework includes an inventory of problems on tributaries. See Section 6.3 in the Final EIS.
04-002b	Comment recommends ongoing monitoring and modification of permits terms in response to future environmental changes.	The Environmentally Preferred Alternative identified by the USACE and described in Section 2.7 of the Final EIS includes requirements for ongoing monitoring of future dredging activities to assess continued river bed degradation.

Table 10.3-1 Comment-Response Matrix

Comment ID[a]	Comment	Response
18-002, 32-001, 34-001	Several comments suggested that any modifications to water intake structures necessitated by bed degradation should be paid for by the companies that dredge material from the river. Another comment suggested excluding dredging in additional areas to protect intake structures and collector wells.	The EIS concluded that dredging is one of several factors causing river bed degradation in the LOMR but did not determine how much of the degradation was caused by each of the contributing factors. Dredging and public water supply are only two of the various uses of that public resource known as the Missouri River. The USACE does not have the legal authority and does not consider it appropriate to require the Dredgers to pay for economic losses or expenses experienced by LOMR water users due to bed degradation. The USACE would have neither the authority nor the inclination to require LOMR water users to compensate the Dredgers for economic losses associated with dredging restrictions needed to protect water supplies. This EIS describes the anticipated consequences of the Proposed Action and alternative actions. The EIS identifies an Environmentally Preferred Alternative that balances the various public interests, including the need for aggregate and the need for a stable water supply. The Final EIS has identified an Environmentally Preferred Alternative that would allow a level of dredging and associated restrictions that is anticipated to result in no more than slight river bed degradation in the near term and long term. The Final EIS does not, however, determine what will or will not be permitted. That decision will be based on the Environmentally Preferred Alternative but with modifications determined through the permit evaluation process required by Section 404(b)(1) of the CWA. The factors considered (including these public comments) and conclusions reached in that process will be described in the ROD that will be published no sooner than 30 days following publication of this Final EIS.
30-005, 32-006	WaterOne believes the EIS should explore synergistic extraction opportunities where off channel dredging connected to the river could be used to create amenities while meeting the sand supply needs. This type of dredging could create marinas and harbors for both recreation and barge traffic that would make recreation and navigation more attractive in these stretches of the river. Perhaps recreation access could be tied to the riverboat casinos and hotels constructed along the river.	While a noteworthy possibility, this suggestion is not currently included as a potential mitigation measure in Section 6.4.2.
43-034	Page 2-51, second bullet point, Dredging locations. This is an unnecessary restriction. Limitations of reaches is an arbitrary decision made by the Corps years ago with demonstrated negative consequences, if you presume that bed degradation does in fact occur. The Corps' previous policy decisions regarding bed degradation by concentrating dredging in specific reaches has potentially increased bed degradation, if in fact it does occur.	In the past, the USACE has permitted lengthy reaches of the LOMR for commercial dredging based on applicant's requests. Historical dredging activity tends to be concentrated by operational logistics (proximity to sand plants) rather than limitations imposed by USACE permits. See Section 2.2.1 for details. Proposed mitigation (Section 6.2.1) proposes spreading out commercial dredging to reduce dredging intensity.

Table 10.3-1 Comment-Response Matrix

Comment ID[a]	Comment	Response
44-42	Page 6-4 6.2.1 Restrict Concentrated Dredging Except for the L-385 dredged fill, Holliday Sand already moves many miles up and downstream searching for the best material and we already have maximum tonnages per reach. Displacing dredging more than 10 miles from its port requires fleeting with larger towboats with resident crews and many more barges than we currently have. We would also need additional barge handling equipment at the dock. Acquiring these assets could require years and many millions of dollars.	Comment noted.
44-43	Page 6-5 6.2.2 Prohibit the Use of Cutter-Head Dredges Holliday does not use a "cutter-head" per say, but rather a cutter chain. A cutterhead is a rapidly rotating basket with blades on which teeth may be attached to loosen more aggressive deposits (cemented/conglomerate) or to improve cutter edge life. A "Swintek" chain cutter is more of a traveling screen that passes at very low speed across the suction pipe entrance. It does not cut, but rather loosens the deposit. It is an efficiency tool (screens out larger rocks that would wedge in the pump vanes, and increases the percent of solids) rather than an excavation tool. Not using our cutter chain would have no effect on the coarseness, depth of the sand we dredge, or whether hardpan is attacked (we don't and are prohibited from it by the Corps Dredge Permit conditions) only on our efficiency (production and downtime rates).	Comment noted. The text of Chapter 2 has been revised in the Final EIS to reflect this clarification.
44-45	Page 6-8 "Dredging levels and locations could be adjusted based on changes in channel geometry over time." This is done in the KS River and is inherently unfair and unhelpful. It exacts a penalty on dredging for degradation that may or may not have any connection with dredging. It was done on the Kansas River because, except for the reservoirs, there was nothing else to control in reaches that were already degrading, with or without any dredging. We accepted that and packed up and headed for the big Missouri River – ten times larger with traveling dunes of sand. Until more sand is being removed than is entering a reach, the problem is one of velocity (or shear stress) induced erosion, not of excessive dredging. Unless the velocity forces are reduced, the reach is doomed to continue to degrade. Less dredging only results in the accumulation of more sediment downstream of the	See the updated Section 6.3, "Monitoring and Adaptive Management Framework," in the Final EIS for details on how dredging will be monitored and adjusted over time. Also see General Response #1 immediately following this Comment-Response Matrix.

Table 10.3-1 Comment-Response Matrix

Comment ID[a]	Comment	Response
	degrading, high velocity reach. This will become a problem in itself and has been in the past with various water intakes that we provided dredging services to remove sand accumulated in front of the intake (primarily KCP&L's Hawthorne Station and Trigen).	
46-004	Work through adaptive management practices that are approved through a cooperative effort by the USACE and the dredging community.	Comment noted. A discussion of ongoing monitoring and future review of river bed degradation conditions is discussed in Section 6.3.1 of the Final EIS.
50-019	6-2 About adaptive management. Although the 1-dimensional analysis of bed-material load is excellent, in my opinion, it is limited in application to prediction of habitat effects because it provides cross sectional averages. Habitat dynamics result from 3-dimensional erosion and sedimentation processes that cannot be captured in 1-d and only partly in 2-d models. Particles that are carried in suspension as washload in the thalweg may be deposited to create habitat on inside bends, for example, where velocities are lower. Similarly, a threshold of bed-material load associated with cross-sectional-average channel stability (lack of degradation) does not necessarily indicate stability (or dynamic equilibrium) of channel marginal habitats. For example, sidecast gravel and cobbles may accumulate in the main channel and impede incision in the thalweg, but sediment deficits in the reach may result in increased erosion of lateral (SWH) deposits. I would not expect these 2-d and 3-d processes to be covered in the EIS, but I think they should be acknowledged in planning for adaptive management. In particular, well-designed habitat monitoring in dredged and undredged reaches could provide a basis for evaluating effects of dredging on all habitats at the reach scale. A comprehensive monitoring design could also address changes in bed composition and recovery times (p. 6-6).	Comment noted.
Comment Category: General Comments		
01-001, 01-002, 05-004, 18-002, 43-002, 43-064, 43-065, 43-	Various comments cited the conclusions of the recently completed Missouri River Bed Degradation Reconnaissance Study and indicated that the dredging permit decision should be deferred until the pending Feasibility Study is complete. Some comments indicated that in some cases dredging should be stopped or	NEPA requires preparation of an EIS for federal government-funded or -authorized actions that could result in significant environmental impacts. The applications for permits to mine sand from the Missouri River triggered the need for the USACE to evaluate impacts from the proposed activity, before it made a permit decision potentially authorizing sand dredging (the major federal action). The USACE identified river bed

Table 10.3-1 Comment-Response Matrix

Comment ID[a]	Comment	Response
A003, 44-31, 89-005, 91-001, 93-002, 95-002,18-002, 01-002	reduced until the Feasibility study is complete while other comments indicated that dredging should not be further reduced until the Feasibility Study is complete and problems with Corps of Engineers structures are addressed. One comment stated that if this EIS has reached an absolute conclusion that Missouri River commercial sand dredgers are the cause of bed degradation, then there is no need for the Feasibility Study.	degradation of the LOMR as a significant concern and found that levels of bed degradation were highly correlated with levels of commercial dredging. Therefore, the USACE determined that an EIS was required to comply with NEPA before any dredging could be reauthorized or new permits issued. Preparation of the EIS began in December 2008. The EIS evaluates the effects of continued dredging on river bed degradation, the environmental impacts of current and proposed dredging practices, and the alternate methods of obtaining sand. The EIS also analyzes the economic impacts of the proposed dredging, alternative dredging strategies, and other methods of obtaining sand. Because the permit action pertains to commercial dredging, the EIS was focused on commercial dredging activities. It does not extensively study other potential causes of river bed degradation. It also does not extensively study impacts of bed degradation to public infrastructure, nor does it examine potential remedies that may be required to address impacts to infrastructure in the future. In a separate action, because of concern about potential impacts to public infrastructure from river bed degradation, Congress authorized and appropriated general investigation funds through the Energy and Water Development Appropriations Act of 2008 for the Missouri River Bed Degradation Reconnaissance Study (Reconnaissance Study) to be conducted under authority of Section 216 of the Flood Control Act of 1970. The Reconnaissance Study, completed in 2009, evaluated effects of degradation on federal and non-federal infrastructure along the LOMR. The study looked broadly at the causes of and potential solutions to river bed degradation of the Missouri River between Rulo, Nebraska and St. Louis, Missouri. The findings demonstrated that river bed degradation in the lower 498 miles of the Missouri River is the result of a combination of causes. The study concluded that data collected over the previous 15 years suggest that the increased dredging take, working in concert with the BSNP, has become the dominant cause of river bed degradation. The Reconnaissance Study also demonstrated sufficient evidence of potentially feasible federal actions that could provide economic benefit such that it would be in the federal interest to participate in a cost-shared Missouri River Bed Degradation Feasibility Study (Feasibility Study). Subsequent to this determination, an agreement has been signed with Mid-America Regional Council for a cost-shared Feasibility Study. Preparations are underway for the study effort to begin in January 2011. The Reconnaissance Study was an initial look at potential alternatives based on available information. It is not a definitive alternatives analysis, as its intent is to establish the federal interest. The more definitive study and full examination of

Table 10.3-1 Comment-Response Matrix

Comment ID[a]	Comment	Response
		alternatives will be done during the Feasibility Study. The Feasibility Study will address river bed degradation and its effects on the short-term and long-term stability of federal flood risk management systems. The purpose of the Feasibility Study is to ensure continued flood protection for areas currently protected by federal flood risk management systems. In addition, the Feasibility Study would address the effects of river bed degradation on the long-term stability and sustainability of the navigation system by determining whether structural or operating changes to the navigation system might minimize or eliminate the impacts of degradation on the system. The Feasibility Study would consider approaches to help maintain or enhance the viability of federally constructed ecosystem projects such as constructed wetlands and shallow-water habitat, and the potential for ecosystem benefits as a result of implementation of measures to address river bed degradation. In addition, the Feasibility Study would address the potential for protection of local infrastructure. The Feasibility Study is neither certain to occur, set to any finite timetable, nor scoped to answer many of the relevant specific questions pertaining to sand dredging. NEPA requires impact analysis and disclosure using the best available information. The EIS describes the anticipated consequences of the dredging activities proposed by the applicants as well as the anticipated consequences of alternative actions. The EIS identifies an Environmentally Preferred Alternative based on the best available information. The EIS findings agree with the Reconnaissance Study findings that river bed degradation in the lower 498 miles of the Missouri River is the result of a combination of causes, including commercial dredging. The recent study completed by National Academy of Sciences, Missouri River Planning: Recognizing and Incorporating Sediment Management also recognized that river bed degradation is occurring on the Missouri River and that a relationship exists between commercial sand dredging and degradation. The EIS determined that bed degradation that would likely result from the Proposed Action and alternative actions, and estimated how much degradation would result. However, it does not determine whether dredging will or will not be permitted. That decision is reached through the permit evaluation process required by Section 404(b)(1) of the CWA. The factors considered (including these public comments) and conclusions reached in that process will be described in the ROD that will be published no sooner than 30 days following publication of this Final EIS.
01-002, 22-001, 44-56, 44-58, 87-001	Several commenters recommended that the dredging permits be extended without any changes for various reasons.	This EIS describes the anticipated consequences of the Proposed Action and alternatives, and identifies the Environmentally Preferred Alternative. However, it does not determine what will or will not be permitted. That decision is reached through the permit evaluation process required by Section 404(b)(1) of the CWA. The factors considered (including these public comments) and conclusions reached in that process

Table 10.3-1 Comment-Response Matrix

Comment ID[a]	Comment	Response
		will be described in the ROD that will be published no sooner than 30 days following publication of this Final EIS.
02-003, 43-007, 43-027, 43-039, 43-040, 43-080, 43-104, 43-013	Various comments suggest that the USACE does not have legal authority to regulate commercial dredging for various reasons. One said that we have no authority under Section 404 of the Clean Water Act because there is no discharge of dredged material other than incidental fallback. Others assert that the river bed is owned by the States of Missouri, Kansas, and Nebraska; that the states have the right to transfer the mineral rights and authorize dredging; and that termination of sand dredging operations on the LOMR is not the exclusive decision of the USACE and would be a "taking" if they did so.	Various comments suggest that the USACE does not have legal authority to regulate commercial dredging for various reasons. Under Section 10 of the Rivers and Harbors Act, the USACE clearly has authority over dredging activities in navigable waters of the United States. One of the congressionally authorized purposes of the LOMR is navigation, and the LOMR is in fact navigated for various commercial purposes. The LOMR is clearly a navigable waterway and thus is navigable water regulated under Section 10. One comment stated that the USACE has no authority under Section 404 of the CWA because there is no discharge of dredged material other than incidental fallback. Section 301 of the CWA prohibits the "discharge of any pollutant" into navigable waters from any point source without a permit. Under CWA Section 404(a), the USACE may issue permits for the discharge of "dredged or fill material" into the waters of the United States. Between 1986 and 1993, the USACE defined the discharge of dredged material as "any addition of dredged material into the waters of the United States" but expressly excluded so-called "incidental fallback," or "de minimis, incidental soil movement occurring during normal dredging operations." In response to the ruling and associated court order issued in the case in the D.C. District Court titled National Association of Homebuilders v. Corps, (hereafter known as NAHB) (No. 01-0274 at 7, 10 [D.D.C. Jan. 30, 2007]), the USACE considers the time that dredged material is held before being dropped to earth and the distance between the place where the material is collected and the place where it is dropped as the two primary factors in whether a discharge is incidental fallback. The LOMR commercial dredging operations extract sand and gravel from the river bed using hydraulic suction dredges. The dredges operated by Holliday Sand & Gravel Company have onboard equipment to sort the dredged material, press the water out of the desired material, and discard unwanted excessively fine or coarse material and water back into the river in a process that takes several minutes. The unwanted material is discharged into the river at a point 40 feet or more from the suction dredge head and the desired material is discharged onto a barge. The USACE has determined that a significant amount of unwanted material and water is discharged at a point and time that are substantially different from the point and time of extraction and are therefore not excluded from regulation under Section 404 of the CWA as incidental fallback. The other dredges on the LOMR do not have onboard sorting and drying equipment, and discharge the pumped material and water directly through screens onto a barge with slots or drain holes to allow the water to drain out. Dredged material is discharged back into the river in the form of cobbles and debris separated by the

Table 10.3-1 Comment-Response Matrix

Comment ID[a]	Comment	Response
		screens, and a relatively small but significant amount of silt and sand that is carried by a substantial volume of water draining off the barges because the dredged material was not mechanically dewatered. The USACE has determined that the cobbles and debris that are excluded from the barge and the suspended silt and sand washed out of the barges with the draining water are discharged back into the river at a point and time that are substantially different from the point and time of extraction and are therefore not excluded from regulation under Section 404 of the CWA as incidental fallback. Several comments assert that the river bed is owned by the States of Missouri, Kansas, and Nebraska; that the states have the right to transfer the mineral rights and authorize dredging; and that termination of sand dredging operations on the LOMR is not the exclusive decision of the USACE and would be a "taking" if they did so. USACE jurisdiction is not limited by property rights or directed at property. Jurisdiction stems from the nature of the proposed activity within waters of the United States (as defined by regulation), regardless of property ownership where those waters are situated. USACE permits do not grant or revoke property rights, although administration of the CWA and Rivers and Harbors Act of 1899 may incidentally affect the use of the property. The USACE assesses any potential takings implications as part of its permit decision document. The USACE acknowledges that the states own both the land and the minerals comprising the river bed, have the responsibility to manage it for the benefit of the public, and can authorize and collect royalties for using that state land or extracting the mineral resource if they choose. The USACE has taken into account comments from the states relative to the values and impacts associated with dredging and the bed of the river, and will assess any potential takings implications as part of its permit decision document. The proposed federal action in this case is the reissuing of Department of the Army permits for dredging operations under Section 404 of the CWA and Section 10 of the Rivers and Harbors Act of 1899. The respective objectives of these laws are to restore and maintain the chemical, physical, and biological integrity of the nation's waters and to prohibit the creation of any obstruction to the navigable capacity of any of the waters of the United States without specific approval of the Chief Engineer of the USACE. Any state permits for these operations are separate and independent state actions. Contrary to the comment that termination of the dredging operations is not the exclusive decision of the USACE, either the USACE or the states can independently deny the requests for new dredging permits. Without either permit, dredging would be terminated. One comment suggests that bed degradation "is inherent in the design of the BSNP as a self-scouring system," and "is permitted under law and is permitted by the owners, the States of Kansas and Missouri." The Draft EIS assesses impacts to the human

Table 10.3-1 Comment-Response Matrix

Comment ID[a]	Comment	Response
		environment. It does not mandate a particular outcome. The Draft EIS did not assert that no bed degradation was legally allowable under state or federal law. It also did not state that bed degradation was inherent in the design of the BSNP. The Rivers and Harbors Acts of 1912, 1925, 1927, and 1945 gave the USACE the responsibility and authority to construct, operate, and maintain the BSNP to maintain a 9-foot deep by 300-foot-wide navigation channel that is self-maintaining. Self-maintaining means a river in equilibrium, not a degrading river. The BSNP is designed to cause deposition and erosion to be in equilibrium so that there is no net aggradation or degradation. Commercial dredging is a changing factor that was not taken into account in the original design of the BSNP and can be assumed to cause bed degradation unless the BSNP is adjusted to accommodate the increased dredging and restore the equilibrium. The authorization for the BSNP does not require the USACE to adjust the BSNP to accommodate increased dredging. Section 404 of the CWA and Section 10 of the Rivers and Harbors Act of 1899 direct the USACE to protect the chemical, physical, and biological integrity and the navigable capacity of waters of the United States. Even if one successfully argues that the States of Kansas and Missouri have knowingly permitted the dredging and the associated bed degradation, those permits are insufficient in this case.
03-021	Commenter suggests that the sand pants proposed by two of the applicants should be reviewed as connected actions in the EIS.	The proposed sand plants have been described in Appendix B of the Draft EIS. Planning for these facilities has not advanced to the point where detailed environmental analysis can be completed. However, to the extent that specific resources may be affected by construction and operation of the proposed sand plants, a qualitative description of those impacts has been included in Chapter 4. A list of potential permits that may be required and associated detailed environmental analysis that would be completed was also included in Appendix B of the Draft EIS.
04-004	Comment requests that the appendices include agency coordination and communication documents in the Appendices	All documents cited in the Final EIS have been listed in the references section found at the end of each section, including documentation of any agency coordination cited in the Final EIS.
04-007	Commenter suggests that the authors paste certain text into another location in Chapter 1.	The comment was considered. Because the suggested revision would confuse the description of the need for the project and the need to prepare an EIS, the suggested revision was not made.
04-008	Page 1-8 Third paragraph - Please revise the text to include that the Fish and Wildlife Service also comments on Section 10 and 404 permits under the FWCA.	The text on page 1-7 has been modified in the Final EIS.

Table 10.3-1 Comment-Response Matrix

Comment ID[a]	Comment	Response
04-009	Comment identifies a discrepancy in the reported total dredging for the year 2009.	Text on page 1-3 of the Final EIS has been revised to reflect the correct value of 4,634,311 tons.
04-011	Page 2-3, Table 2.2-1 - Figure 2.2-1 indicates the proposed site of Master's Dredging Company is in the St. Joseph reach of the project area. The table should be revised accordingly. Page 2-40, first paragraph - See previous comments regarding consistent quantity of material dredged in 2009. - The second paragraph notes 2009 dredging quantities as 4.5 million tons, but information on Page 1-3 indicates almost 5.5 million tons. The text should include the correct amount.	These comments have been addressed in the Final EIS; appropriate corrections have been made.
40-001	Consideration by the U.S. Army Corps of Engineers a denial, or a reduction in quantity of permits, which would constitute a ban on dredging operations on the Missouri River.	Comment noted.
43-041	Page 2-57, paragraph 3. This paragraph does not say anything and is not clear. It needs to be rewritten.	Comment noted. The paragraph noted has been reviewed and it was determined that text changes were not warranted.
43-067	Further, this entire section is predicated on internal reports that have not received external peer review or, if such peer review has occurred, have not been provided contrary to the requirements of FOIA and its responsibility to supplement. These internal reports make a conclusion that there is a correlation between bed degradation and commercial dredging. This position has been refuted. The references in this section to USACE documents and USACE material provides loose circumstantial correlations that are not documented by either the USACE efforts or efforts on behalf of these authors.	A considerable portion of the data considered and analyzed in the EIS originated with the USACE. Additional data were obtained from other sources, including the USGS, state agencies, and published reports. All of the data and information not previously published or available to the public are now a part of the available administrative record for preparation of this EIS.
43-A001	The commenter claims that the use of unpublished data and reports as sources precludes effective review of the Draft EIS.	In the Draft EIS and its underlying analysis, the USACE has sought to use the best and most current available information. In some cases, these data are unpublished, in development, or in the "grey literature" (i.e., in reports and data files that are not widely known or available, such as agency reports). The use of unpublished data in NEPA documents is widely practiced; without the use of unpublished data and reports, a vigorous and comprehensive analysis would not have been possible. The USACE has strived to make it clear when such unpublished data were used and to show the underlying analysis and summary of results in the EIS and the appendices. All data and information cited in the EIS are also compiled within the Administrative Record

Table 10.3-1 Comment-Response Matrix

Comment ID[a]	Comment	Response
		for the EIS. It is therefore available either in the designated information repositories or upon request through the Freedom of Information Act. The USACE has cited personal communications or unpublished data only as sources of information for its analysis, not as support for conclusions regarding impacts or their significance.
43-A006	The term "flow" is used in various ways, the meaning is not always clear based on context. Specific scientific terms such as: instantaneous flow rate, average daily flow rate, total volume of flow, velocity, etc. would provide the reader with a clearer understanding of the writer's intent.	In a general discussion in the Draft EIS, the term "flow" is used in place of more specific terms to aid the readability of the text and is used interchangeably with "discharge." Where more specific terms were required, they were, in general, used.
43-A007	Likewise the term "sediment" is used synonymously as suspended sediment, total sediment, and material bed sediment.	"Sediment" is a general term that includes many types of sediment. In general, where a more specific term was warranted, it was used.
43-A008	Difficulties understanding the specifics of the Draft EIS stems from the use of words with no specific meaning such as slight, slightly, moderate, long term, short term, extensive, significant, major, substantial, substantially. Terms used with no specific values were used throughout the document. Using a term such as "significant flood events" without mention of statistical probability is perplexing.	Environmental impact analyses are often challenging because they call for making projections with incomplete information. Methods of assessing the impacts typically include both objective and subjective information that are difficult to quantify. The USACE used the best available information to quantify, wherever possible, statements about frequency, intensity, duration, and spatial scale of impacts. This was not always possible, as the data were not available or not amenable to quantification; the data needed to characterize statistical probabilities were not available for most impact topics. In regard to one of the most important issues, potential impacts on geomorphic conditions and river bed degradation, the USACE did characterize the terms "short term" and "long term," as well as "slight," "moderate," and "substantial." See Section 4.2.2.2, "Changes in River Bed Elevation – Categories of Bed Elevation Change," in the Draft EIS.
44-40j	The comment stated that the EIS did not describe the scale of impacts associated with commercial dredging compared to other activities, such as the BSNP.	Chapter 3 of the EIS discusses the existing environment in the LOMR in the context of past and current conditions, including the BSNP and flow modification. The discussion of potential impacts associated with Project alternatives, as presented in Sections 4.5, 4.6, 4.7, and 4.8, are discussed in the context of existing conditions. Chapter 5 discusses the potential cumulative impacts of commercial dredging in conjunction with past, present, and reasonably foreseeable actions, including the BNSP and flow modification.
46-002	Eliminate the term segments from the study…Dredging with cutterhead and how we use them to create a mixing zone not just for obtaining maximum depth.	As discussed in Section 3.2 of the EIS, dividing the overall study area into river segments was necessary to provide a workable structure for the geomorphic analysis. Comment noted regarding use of cutterheads for Capital Sand Company's dredging operations

Table 10.3-1 Comment-Response Matrix

Comment ID[a]	Comment	Response
46-003	Capital Sand Company does not make a product onboard our dredges by mechanical controls (Le. Classifiers). We make specification products by screening the raw material from preferred locations.	Comment noted.
7, 10, 16, 19, 20, 31, 35, 38, 42, 47, 52, 92, 96, 97, 98, 99, 100	Letter received.	No comment to respond to.

Note:

[a] The Comment ID is the letter ID from Table 10.2-1 followed by the comment number identified within the letter.

List of Acronyms:

BLM = U.S. Bureau of Land Management
BSNP = Bank Stabilization Navigation Project
CFR = Code of Federal Regulations
CRP = Construction reference plane
CWA = Clean Water Act
CWCP = Missouri River Mainstem Reservoir Current Water Control Plan
EIS = Environmental impact statement
EPA = U.S. Environmental Protection Agency
ESA = Endangered Species Act
FHWA = Federal Highway Administration.
FOB = Freight-on-board, free-on-board
GHG = Greenhouse gas.
HBED = Hydroacoustic bed elevation data
KDOT = Kansas Department of Transportation
LOMR = Lower Missouri River
MDNR = Missouri Department of Natural Resources
mm = Millimeter
MoDOT = Missouri Department of Transportation
MRRP = Missouri River Restoration Program
NAAQS = National Ambient Air Quality Standards
NEPA = National Environmental Policy Act
NOx = Oxides of nitrogen

NPS	=	National Park Service
NWI	=	National Wetlands Inventory
PA	=	Programmatic Agreement
Reconnaissance Study	=	*Missouri River Bed Degradation Reconnaissance Study Report* (USACE 2009b)
RM	=	River mile
ROD	=	Record of Decision
SEMEP	=	Series Expansion of the Modified Einstein Procedure
USACE	=	U.S. Army Corps of Engineers
USFS	=	U.S. Department of Agriculture Forest Service
USFWS	=	U.S. Fish and Wildlife Service
USGS	=	U.S. Geological Survey
VOC	=	Volatile organic compound

General Response #1

Comment Summary:

Comments attribute changes (including degradation changes in sediment transport) to BSNP structures and mainstem dams in the LOMR channel rather than dredging. Comments state that the Draft EIS analysis focused only on dredging as the cause of degradation rather than the other factors.

Response:

The mainstem dams, the BSNP, channel cutoffs, changes in flow regimes, and dredging were all identified as potential contributors to river bed degradation in the Draft EIS. Within the limitations of available data, the Draft EIS further establishes that dredging contributes to degradation in areas where dredging is concentrated. Additional analyses prepared in response to comments for the Final EIS show a statistically significant relationship between dredging amount in a dredging reach/dredging intensity and localized bed degradation for areas of the LOMR where dredging has occurred over the past 10 years (see Section 3.4.6.3 and Appendix A of the Final EIS). The following summary of geomorphic processes describes why localized degradation, particularly in urban areas, is not solely the result of past engineering changes (e.g., upstream dams and the BSNP) on the LOMR system.

Aggradation/degradation occurs when the sediment supply to a river and its transport capacity are not in balance. Bed degradation occurs when the river's sediment transport capacity is greater than the supply of sediment and the effective shear stress of flowing water is sufficient to erode either the bed or the banks, increasing the sediment supply. Aggradation occurs when the sediment supply exceeds the transport capacity of the river, causing some of the sediment to be deposited on the river bed. Lane's Balance Diagram (Lane 1955) depicts the relationship between aggradation or degradation and key geomorphic variables, including sediment size, sediment load, channel gradient (slope), and discharge (Figure GGR3). The balance indicator arrow shows that aggradation or degradation results when any one of the factors in the relationship change. For example:

- A reduction in sediment supply or grain size will tip the balance toward degradation, while an increase in the average grain size of the sediment or an increase in the debris content will tip the balance toward aggradation (while holding the other variables constant).
- An increase in discharge (magnitude and frequency of peak flows) will tip the balance toward degradation, while a reduction in discharge will tend to increase aggradation (while holding constant the other variables, including sediment load).
- An increase in channel slope or flow velocity (which could be caused by riverbend cut offs and the BSNP) will increase degradation, while a decrease in channel slope or flow velocity will increase aggradation.
- A decrease in substrate grain size will reduce frictional losses, increasing effective shear stress and leading to more degradation or incision, while an increase in grain size will increase frictional resistance and diminish the effective shear stress, thereby leading to increased aggradation.

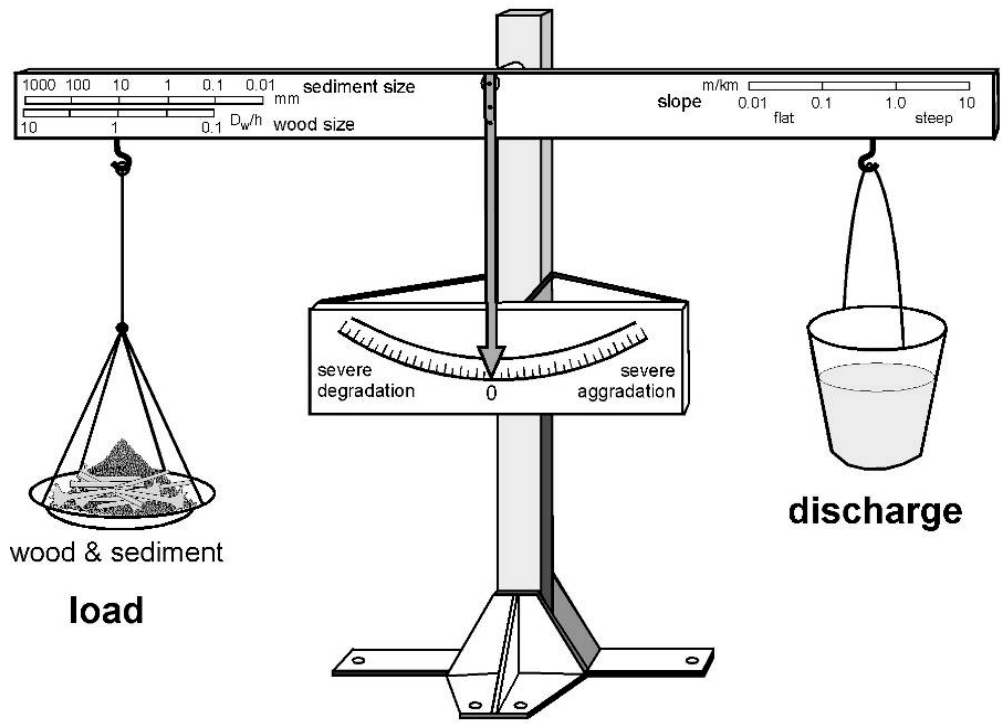

$$(Q_w D_w)\ (D_s Q_s) \propto (S)\ (Q)$$

Figure 10.3-1. Lane's Sediment Balance Diagram Showing the Relationship between Load, Discharge, Sediment Size, Slope, Aggradation, and Degradation (Lane 1955).

Construction of the mainstem dams has reduced total sediment loads in the reaches below the dams. However, only a portion of the total sediment load (the bed material load size fraction) interacts with and affects aggradation/degradation of the bed. By definition, the bed material load describes the dominant-sized fraction of sediment that is found in the river bed, which varies by location and with factors such as velocity. Most of the sediment trapped by upstream dams is wash load (sediment transported in suspension that is smaller than the bed material load size fraction) and has little effect on aggradation or degradation of the river channel. (See Section 3.4.5 for more details.)

Using the BSNP, the USACE has engineered the river to maintain an open navigation channel through the dynamic balance between discharges and sediment loads so that, on average, neither aggradation nor degradation occurs. (See Sections 3.4.3.2 and 3.4.6.3 for more details.) To maintain an open navigation channel, dikes are built along the edge of the river to constrict flows to the center part of the channel, which increases the river's velocity and its ability to transport sediment of a certain size range. This increased sediment transport capacity does not allow the river bed to continuously erode, scour, or degrade, but rather it allows certain sizes of sediment to be transported through the navigation channel under a normal range of flow conditions in order to maintain the navigation channel at the desired depth. A consequence of increased velocities is an increase in sediment size and armoring of the channel bed (Kondolf 1997). This has been observed below the Gavin's Point Dam (USACE 2001) but has not been observed in the Kansas City reach, possibly due to the near-continuous bed disturbance and removal of coarser material through dredging.

The current configuration of the LOMR is very different from the pre-dam and pre-BSNP river system. The BSNP was constructed and has been continuously modified to create a navigable river system that is, in general, in dynamic balance with the post-dam available sediment load and current flow regime. This balance has been achieved throughout most of the LOMR, with possible exceptions in the Kansas City and St Charles segments, as shown by bed elevation changes at USGS gage locations (Kansas City and Hermann), where long-term bed degradation has occurred with varying levels of dredging. Although dredging is not the only factor likely to be affecting degradation in the Kansas City and St. Charles segments, dredging is exacerbating degradation there. In particular, equilibrium slope calculations performed for the Kansas City segment show that the actual slope is lower than the predicted slope, indicating that this reach may be out of balance. This calculation is described in Section 4.2.3.2 and Appendix A.

In response to the dynamics of the LOMR system, the USACE has periodically updated the dike configurations. The most recent changes to dike heights in the Kansas City segment occurred in 2004 and 2009 (Chapman pers. comm.). Dike notching has also been implemented to erode sediment that has accumulated due to degradation and low flows since the early 1990s (Chapman pers. comm.).

The causes of degradation on the LOMR are complex and vary at different locations along the river. The Draft EIS focused on dredging as a contributor to bed degradation because dredging is the applicants' sole proposed activity. Changes to the flow regime, the mainstem dams, or the BSNP structures are not proposed as part of the Proposed Action or alternatives, or as part of the cumulative impact analysis in the Draft EIS. The geomorphology analysis found that dredging occurs at most locations where bed degradation occurs and is severe in the areas where intense dredging occurs (see Figures 3.4.30 and 3.4.31). Further, a statistically significant linkage between total dredging amount in a dredging reach, dredging intensity, and bed degradation was identified (see Figures 3.4.32a and 3.4.32b) that clearly demonstrates the likely contribution of dredging to bed degradation. Although dredging cannot be assigned as the sole cause of bed degradation, it has been identified as a major contributing factor and is the only factor under consideration for discretionary permit approval by the USACE. See Section 3.4.6.3 for more detail on potential causes of bed degradation on the LOMR.

10.4 REFERENCES

10.4.1 Printed Literature

73 FR 74150. Notice of Intent to Prepare a Joint Environmental Impact Statement for Commercial Dredging of Construction Aggregate from the Missouri River in Missouri and Kansas, Department of the Army; Corps of Engineers. December 5, 2008

75 FR 43160. Environmental Impact Statements: Notice of Availability. EIS No. 0100270, Draft EIS, USACE, MO, Missouri River Commercial Dredging, Proposal to Extract Sand and Gravel from the Missouri River, U.S. Corp of Engineer's Section 10 and 404 Permits, Kansas City, Central Missouri and Greater St. Louis, Missouri. July 23, 2010.

Kondolf, M. G. 1997. Hungry Water: Effects of Dams and Gravel Mining on River Channels. Environmental Management 21(4): 533-551.

Lane, E. W. 1955. The Importance of Fluvial Morphology in Hydraulic Engineering, American Society of Civil Engineering, Proceedings, 81, Paper 745: 1–17.

USACE (U.S. Army Corps of Engineers). 2001. Investigation of Channel Degradation, 2001 Update. Missouri River Gavins Point Dam to Platte River Confluence, December.

10.4.2 Personal Communication

Chapman, Mike. U.S. Army Corps of Engineers. Email communication, January 28, 2010.

This page intentionally left blank.