Kansas Citys, Missouri and Kansas
Flood Risk Management Feasibility Study

Engineering Appendix to the Final Feasibility Report

Chapter A-13

Armourdale Structural Analysis

Chapter A-13
Armourdale Structural Analysis

Table of Contents

A-13.1 Overview 1
A-13.2 Soil Material Properties 1
A-13.3 Armourdale Existing Conditions 1
A-13.3.1 Existing Armourdale Floodwalls 1
A-13.3.1.1 60+30 to 77+78: 2
A-13.3.1.2 246+88 to 250+52 Floodwall: 2
A-13.3.1.3 257+65 to 302+58 Floodwall: 3
A-13.3.1.4 Floodwall Existing Conditions Summary 4
A-13.3.2 Drainage Structures Existing Conditions 4
A-13.3.3 Closure Structures Existing Conditions 6
A-13.3.3.1 249+55 CRI&P Bridge 6
A-13.4 Future With Project Conditions 7
A-13.4.1 Floodwall Future Conditions at Existing Floodwall Stations 7
A-13.4.1.1 Station 60+30 to 77+78: 7
A-13.4.1.1.1 Nominal 500+3ft, 4.25 ft raise 7
A-13.4.1.1.2 N500 and N500+5' Events 8
A-13.4.1.2 Station 246+88 to 250+52 8
A-13.4.1.2.1 Nominal 500+3ft, 3.5 ft raise 8
A-13.4.1.2.2 N500+0 and N500+5' Events 8
A-13.4.1.3 Station 257+65 to 302+58 9
A-13.4.1.3.1 Nominal 500 + 3' 9
A-13.4.1.3.2 N500 and N500+5' Events 9
A-13.4.2 New construction of T-Walls on existing levees 9
A-13.4.3 New Floodwall Construction 10
A-13.4.4 N500+3' Floodwall Summary 10
A-13.4.5 Drainage Structures Future Conditions 10
A-13.4.6 RCBs and Pipes Associated with Gatewells 12
A-13.4.7 Closure Structures Future Conditions 14
A-13.5 References: 15

Chapter A-13
Armourdale Structural Analysis

A-13.1 Overview

This chapter addresses the structural features (floodwalls, gatewells, and closure structures) for the Armourdale unit which includes both existing conditions and future with project conditions. The existing conditions of the structural features are addressed first followed by a separate evaluation of future alternatives for raising the current level of protection (N500, N500+3', and N500+5'). The existing condition evaluation includes assigning reliability to the structures and recommending remedies if required. The future conditions section addresses the approach taken to meet the impacts due to each raise option. For general structural methodology refer to the general structural chapter.

Note: Elevations reference the NGVD29 datum as information was obtained from record drawings

A-13.2 Soil Material Properties

The soil properties used for the Armourdale calculations are located in Table A-13-1. These values were used for general blanket properties in the structural calculations. Soil to structure friction and cohesion interaction was typically neglected for stability and strength calculations. However, where necessary, this behavior was considered under geotechnical guidance.

Friction Angle	26°
Cohesion	-
Moist unit wt.	110pcf
Saturated unit wt.	115pcf
Wall friction coefficient (used in gatwell uplift)	0.25

Table A-13-1: Armourdale Soil Properties

A-13.3 Armourdale Existing Conditions

A-13.3.1 Existing Armourdale Floodwalls

Floodwalls on the Armourdale unit consist of two spread footing floodwalls and one pile founded floodwall. For each of these walls the existing condition was evaluated. The evaluation entailed analysis of existing reliability and recommending solutions for any existing condition deficiencies. See the structural analysis appendix chapter for further information on reliability analysis.

The existing Armourdale floodwalls are as follows:

- Sta. 60+30 to 77+78 spread footing floodwall constructed in 1973.
- Sta. 246+90 to 250+50 spread footing floodwall constructed in 1952 and raised in 1973.
- Sta. 257+65 to 302+58 pile foundation floodwall constructed in 1952 and raised in 1973.

This does not include walls that are part of a closure structure (see closure structures section)

A-13.3.1.1 60+30 to 77+78:

The original spread footing floodwall from station 60+30 to 77+78 was constructed in the 1970's as part of the 1962 Modification (62 Mod) (see **Armourdale Structural Exhibit 1** for a photo and section drawing**)**. This stretch of wall has not been modified to date other than replacing the stop log gap section under the West Kansas Avenue Bridge. Monoliths 1-4 & 10-47; (60+30 to 61+57 and 63+00 to 77+78) currently exist as the originally constructed typical section, and the section that replaced the stop log gap (61+57 to 63+00) was constructed in the mid-80s to match that section. The result is an essentially uniform wall for which complete construction information is known. The only difference from the original and more recent construction was a greater reinforcement cover, but greater material strengths (F_y=60ksi and f'c=4ksi) led to a larger factor of safety than the original typical section (the rest of the wall).

The controlling section for this wall was the typical section (monoliths 1-4 & 10-47) from the early 1970's. See Table A-13-2: Armourdale Existing Floodwall Conditions for stability and strength summary.

A-13.3.1.2 246+88 to 250+52 Floodwall:

The original wall was constructed in 1952 and was raised as part of the 1962 mod which included adding buttresses **(Armourdale Structural Exhibit 2)**. The original drawings refer to two sections as follows:

- Type "B": Station 246+88 to 247+93 (105 ft)
  - The Original sandbag gap under the E. Kansas Ave. Br. from 147+36 to 147+86 was filled in with the 62 mod. Where bridge bracing did not interfere, the wall beneath was extended, but where bracing existed, reinforced concrete was placed and isolated so as not to transfer load to the wall but rather to the bridge bracing. This patch was found to be acceptable for filling the gap, but should not be added to for a raise.
- Type "A": Station 247+93 to 250+52
  - Original sandbag gap from 249+37 to 249+72 replaced with a stop log gap with 62 mod
  - Stop log gap filled in with concrete and bridge abandoned (found by field observation, date unknown)
- For the specifics on the stoplog gap in this stretch of wall see the closure structures portion of this chapter.

Section "A" was found to be the critical section after analysis of both sections. This stretch of wall did not meet strength screening criteria and therefore, a reliability

analysis was performed which computed high reliability. See Table A-13-2 for stability and strength summary.

A-13.3.1.3 257+65 to 302+58 Floodwall:

This floodwall was constructed in1953 and raised with the 1962 Modification. The foundations consist of various configurations of 18”x18” precast concrete bearing piles with a 12” concrete sheet piling cutoff at the heel. The concrete bearing piles appear to be at least 30’ long based on the penetration table in the drawings for bearing piles not driven to design depth or refusal. The 1962 Mod. included a raise varying from 2.7’ to 1.1’ and included a stem thickening on the landside for most of the wall monoliths.

Original design allowable loads for the piles can be found in “Analysis of Design for Construction of Flood Wall, Levee and Appurtenances” which accompanied the drawings. The capacities were reevaluated during this feasibility effort and compared to the original values. The original values are as follows:

- 18”x18” precast concrete bearing piles
    - Max allowable load of 35 tons
    - Max horizontal thrust of 7 tons
- 1’ thick x 16’ long concrete sheet piling
    - Max allowable load of 4.5 tons
- Foundation piles (both types) allowable tension of 200 lbs per sq ft of surface area

From 257+65 to 302+58 the wall sections vary significantly along with the soil elevations. Total heights range from 26’ to 14’ and exposed stem heights range from 23.6’ to 0.0’. This can be seen in the photos and figures provided in **Armourdale Structural Exhibits 3**.

All of the wall monoliths met screening factors of safety, and therefore, the wall was assigned a reliability of 99.8%. The factors of safety for the critical sections are provided in Table A-13-2.

A-13.3.1.4 Floodwall Existing Conditions Summary

Spread Footing Floodwalls (Existing Condition with Water to Top)							
Station	Wall Cross Section	Overturning % Base in Compression (25% Req'd)	Bearing, % of Allowable (150 % Max)	Sliding Factor of Safety (1.3 Req'd)	Wall Strength Factor of Safety (1.5 Req'd)	Comments	Reliability
60+30 to 77+78	Complete Stretch of Walls	48%	100%	1.6	1.5	Toe Steel Governs	99.8% Assigned
247+88 to 250+50	Sect. "A"	51%	122%	>3	1.4	Toe Steel Governs	99.9% Calculated

Pile Foundation Floodwalls (Existing Condition with Water to Top)						
Station	Wall Cross Section	Factors of Safety			Wall/Pile Cap FS Control	Reliability
		Wall/ Pile Cap (1.5 Req'd)	Pile			
			Soil (1.7 Req'd)	Strength (1.5 Req'd)		
257+84 to 259+04	Mon. 6-9	2.2	5.4	6.7	Heel Flexure	99.8% Assigned
273+56 to 274+76	Mon. 93-95 (Slot)	1.5	5	5.6	Heel Flexure	99.8% Assigned
293+61 to 294+92	Mon. 93,94,95	1.5	4.9	5.5	Heel Flexure	99.8% Assigned
295+90 to 302+58	Mon. 97-111	1.8	6.7	6.9	Stem Flexure	99.8% Assigned

Table A-13-2: Armourdale Existing Floodwall Conditions

A-13.3.2 Drainage Structures Existing Conditions

The results for the complete analysis of the Armourdale gatewells existing conditions are presented in Table A-13-3. It is important to note that complete information (wall thicknesses and reinforcement size and spacing) was not available for all gatewells (see table for locations). The results show that where complete information was available all gatewells met the screening criteria factor of safety.

It follows that if a comparable reinforcement ratio is chosen based on the gatewells for which information is known, then all the gatewells with that assumed ratio will pass. Continuing that thought process, all gatewells were assigned a reliability of 99.8% for the economic analysis. **This assigned reliability is for economic use only and does not certify the reliability of the structu**re. To provide actual conclusions regarding the gatewells that lack information field testing will be required. This must include checking wall thicknesses and reinforcement size and spacing.

For further information regarding the analysis approach and examples see the general structural methodology chapter of this appendix.

Existing Conditions with Water to Top of Protection			
Station	**Uplift Factor of Safety (>1.1 Req'd)**	**Strength Factor of Safety (> 1.5 Req'd)**	**Controlling Structural Mechanism**
0+75 UE	1.4	2.4	Base Slab Flexure
7+50 UE	1.5	4.9	Wall Shear
12+79 UE	1.4	1.6	Base Slab Flexure
15+33[b]	1.5	0.7	Base Slab Flexure
32+80	1.3	2.7	Wall Shear
64+71	1.4	1.9	Wall Shear
76+83	Refer to Osage Pump Station Analysis		
79+60[b]	1.4	0.8	Wall Flexure
79+80[b]	1.1	1.4	Wall Flexure
90+79	1.5	4.5	Wall Shear
91+76	1.4	3.4	Wall Shear
108+95[b]	1.1	2.9	Wall Shear
129+20	1.5	1.9	Wall Flexure
156+75	1.5	1.9	Wall Flexure
185+70[b]	1.4	2.3	Wall Flexure
186+74	1.5	2.9	Wall Shear
194+60[b]	1.6	5.0	Wall Flexure
212+76	1.5	3.3	Base Slab Flexure
220+64	1.4	3.2	Wall Shear
230+77	Refer to Shawnee Pump Station Analysis		
240+73	1.4	1.9	Wall Flexure
244+70	1.5	3.5	Wall Flexure
246+53	1.5	4.4	Wall Flexure
250+31[a]	1.5	4.9	Wall Flexure
253+43[a]	1.8	4.7	Wall Flexure
256+71	1.5	3.8	Wall Flexure
260+00[a,b]	1.1	0.9	Wall Flexure
260+84[a]	1.3	7.0	Wall Flexure
262+89[a]	1.1	6.9	Wall Flexure
266+76[a]	1.3	10.0	Wall Flexure
276+79	Refer to KC Southern Pump Station Analysis		
281+50[c]	N/A (on piles)	2.1	Wall Shear
286+59[a]	1.1	4.3	Wall Flexure
290+52[a]	1.5	3.4	Wall Flexure
295+45[b]			
295+52	1.5	3.1	Wall Flexure
299+20	Refer to Central Ave Pump Station Analysis		
311+11	1.4	1.9	Wall Flexure
315+10[b]	1.3	1.5	Wall Flexure
41+45[b]	1.2	1.8	Wall Flexure

[a] top below level of protection

[b] Incomplete information (complete drawings were not found)

[c] Integral with floodwall on piles. Simplified analysis checked wall strength only

Table A-13-3: Armourdale Existing Gatewell Conditions

A-13.3.3 Closure Structures Existing Conditions

The reliability for the Armourdale stop log gaps are given in Table A-13-4.

Stoplog Gap Reliability: Spread Footing Floodwalls (Existing Condition with Water to Top)					
Station	Crossing	Overturning % Base in Compression (25% Req'd)	Bearing, % of Allowable (150 % Max)	Sliding Factor of Safety	Wall Strength Factor of Safety
0+40 to 2+90	Upper End (Railroad)	48%	129%	1.35	2.0
226+75	KC Terminal Bridge	94%	82%	>3	1.8
249+54	CRI&P Bridge	81%	73%	>3	1.7

Stoplog Gap Reliability, Continued (Existing Condition with Water to Top)					
Station	Crossing	Factors of Safety			
		Stoplog Post	Stoplog Guide	Stoplog	Post Well
0+40 to 2+90	Upper End (Railroad)	3	1.8	2.1	1.3
226+75	KC Terminal Bridge	2.6	2.7	OK[1]	2.2
249+54	CRI&P Bridge	N/A	1.94	?	N/A

[1]Checked against NDS specifications

Stoplog Gaps Reliability (Existing Condition with Water to Top)			
Station	Crossing	Reliability	Comments
0+30 to 2+90	Upper End (Railroad)	99.9%	Complete drawings available
226+75	KC Terminal Bridge	99.8%	FS = 1.65 calculated for steel backwall plate
249+54	CRI&P Bridge	99.8%	Assigned reliability. However, the details of concrete placed to fill in the stoplog gap are unknown. Sponsor noted that concrete fill was submitted to and approved by USACE

Table A-13-4: Armourdale Existing Stop Log Gap Conditions

A-13.3.3.1 249+55 CRI&P Bridge

This bridge and the tracks this gap closed have been abandoned. In conjunction with the abandonment of the bridge, the gap was filled in with concrete. The details for that concrete fill were not found. All other information for this crossing was available. The results showed the stop log gap to be reliable. The concrete fill concern was discussed with the sponsor who verified that the plans were submitted to the Corps of Engineers and accepted.

A-13.4 Future With Project Conditions

Future conditions include the alternatives and recommendations for raising the unit elevation to the river stage of the nominal 500 year flood (N500), the nominal 500 plus 3 ft (N500+3), and the nominal 500 plus 5 ft (N500+5). The primary emphasis for the evaluation was on the N500+3 with abbreviated approach to the N500 and N500+5. This was achieved by using the results from the N500+3 and the existing conditions to estimate the N500 and N500+5.

A-13.4.1 Floodwall Future Conditions at Existing Floodwall Stations

The following discussion and results are for stations where walls currently exist. The following alternatives are a summary of the thought process that created the final recommendation for the nominal 500 event plus 3ft (along with a brief discussion of the N500 and N500+5) where walls currently exist. Refer to the structural methodology for more information on formulation of the general floodwall alternatives. Also, for background information on existing walls, refer to the existing conditions section of this chapter.

A-13.4.1.1 Station 60+30 to 77+78:

A-13.4.1.1.1 Nominal 500+3ft, 4.25 ft raise

- **Alternative 1: Landside Earthen Levee**

This was found to be impractical due to land requirements. Note: the wall was only able to retain 2 feet of additional landside soil (with 1 on 3 batter) and therefore, it was not recommended to be used to retain landside soil (acting the opposite direction for which it was designed).

- **Alternative 2 : New Construction/Modification**

Overturning and sliding became a severe problem in considering modification and therefore, a stem extension alone was found to be impossible. In addition, the stem and base became highly overstressed and required extensive widening, thickening, and addition of buttresses which would include a significant doweling effort. Such modifications proved to be unreasonable in comparison to the cost of new construction. .

- **Alternative 3 : Riverside Levee Raise**

Although the general approach in this study has been to avoid any riverside impacts, a riverside levee raise was investigated for this stretch. However, this was eventually eliminated for several reasons.

- **Conclusions:**
    a. A landside levee is not feasible because of site restrictions.
    b. Riverside levee raise was eliminated.
    c. Raising the existing floodwall is impractical.
    d. New floodwall is recommended. This will require measures to maintain the current level of protection (i.e. stage construction).

A-13.4.1.1.2 N500 and N500+5' Events

- N500: The nominal 500 event extension, 1.25 ft, created instability and strength problems (the existing condition factor of safety was only 1.5 for strength). By utilizing the allowable additional landside backfill, stability could be achieved, however strength continued to be a concern. This could potentially be mitigated with buttresses, but the recommendation is to construct a new wall. Therefore, a new wall is recommended where a riverside levee raise is not possible.
- N500+5': For this 6.25' raise new floodwall construction with auger cast piles was determined to be the most effective solution.

A-13.4.1.2 Station 246+88 to 250+52

A-13.4.1.2.1 Nominal 500+3ft, 3.5 ft raise

- **Alternative 1: Landside Earthen Levee**

This existing floodwall was investigated to determine if it could retain additional landside soil (landside levee construction). The two typical sections were investigated (refer to existing conditions for more information), and it was found that the section from 246+88 to 247+93 can retain soil to the top of wall but the section from 247+93 to 250+52 cannot retain more than the 11 ft already retained. A landside levee was found to be impractical because placing a levee under the East Kansas Bridge buried existing bridge steel. Therefore, a new wall is recommended under the bridge.

- **Alternative 2 : New Construction/Modification**

A simple stem extension will not work due to overturning and strength problems, and because foundation modifications would be required to achieve stability. Furthermore, the portion under the bridge has a questionable existing patch which cannot effectively be raised (see existing conditions). Considering that this wall would require heavy modification and has had a previous extension including buttresses, new construction is clearly the best alternative. The new floodwall will be placed landside of the existing wall. Refer to the mapbook for a plan and a section sketch.

- **Conclusions:**
  a. Raising the existing floodwall is impractical.
  b. The recommendation for this stretch is a new wall behind the existing wall. **See mapbook (includes a section sketch**)

A-13.4.1.2.2 N500+0 and N500+5' Events

- N500: For the nominal 500 event extension, 1.1 ft, a stem extension is acceptable for the section past 247+93 (just downstream of the E Kansas Ave Bridge). However, the beginning section, 246+88 to 247+93, which runs under the bridge, should be replaced. This is because the wall under the bridge and the patched in sand bag gap are not acceptable for an extension or any sound modification.
- N500+5': For this 6.25 ft raise, new floodwall construction with auger cast piles was determined to be the most effective solution. The approach was the same outlined for the N500+3

A-13.4.1.3 Station 257+65 to 302+58

A-13.4.1.3.1 Nominal 500 + 3'

- **Alternative 1: Landside Earthen Levee**
  Not feasible due to site constraints.

- **Alternative 2 : New Construction/Modification**

A simple stem extension will not work due to strength problems. Buttresses are required along the entire length of wall to alleviate stem and heel deficiencies. Also, the slot on the landside of the wall must be filled to the adjacent landside elevation.

In addition to the initial structural analysis and foundation analysis using CPGA, a more refined geotechnical analysis was run to evaluate the foundation piles and the wall deflection (see Amourdale Structural Exhibit 7). The geotechnical analysis showed that a new row of piles was required at stations where the existing landside elevation could not be raised enough to alleviate the additional load from the raise. Therefore, away from the deeper portion of the slot, new piles are required. Refer to the mapbook and the Armourdale solution matrix for detailed stationing and sketches.

- **Conclusions:**

Modifying the wall is recommended over new construction. The cost analysis of the Fairfax BPU floodwall alternatives in phase 1 of this feasibility study showed that modifying that floodwall was more cost effective than replacement, and in that case, the new wall was to be built behind the existing wall. In this case, real estate restrictions require that the wall be replaced in the same footprint as the existing wall which would require temporary protection, sequenced construction and building around the existing piles. Therefore, modifying the wall is recommended except for a new stop log gap and wall from 274+36 to 277+21. Refer to the mapbook and the Armourdale solution matrix for detailed stationing and sketches. Also see Armourdale Structural Exhibits 5 and 6 for the structural sketches used for cost estimating.

A-13.4.1.3.2 N500 and N500+5' Events

- N500: This raise is less than 1 ft and can be accomplished with a simple stem extension and backfilling the wall to 751ft.
- N500+5': For this 5 ft raise, modification was recommended. Site constraints and the existing level of protection made placing a landside levee impractical. In addition, new floodwall construction would be too costly requiring special measures to maintain the level of protection. To provide the raise, modification required a new row of auger-cast piles, a toe extension, and buttresses.

A-13.4.2 New construction of T-Walls on existing levees

In several locations (see mapbook) placing T-Walls on existing levees has been recommended for raising the level of protection. This solution is recommended in locations where an existing levee could not be raised because of spatial constraints. By using a T-Wall on the existing levee, a new level could be reached without adding soil and the associated driving forces. Even so, use of a T-Wall still required use of a

landside berm for global stability. The typical section used for the N500+3 cost estimate is given in the mapbook.

A-13.4.3 New Floodwall Construction

Often, after exhausting all other solutions, floodwalls were recommended due to land availability. In some locations with existing levee, the levee is to be removed to prevent global stability concerns and replaced with a floodwall.

A-13.4.4 N500+3' Floodwall Summary

For the locations of proposed N500+3' floodwalls refer to the mapbook accompanying the main body of this report.

A-13.4.5 Drainage Structures Future Conditions

The results for the complete analysis of the Armourdale gatewells N500+3' future conditions are presented in Table A-13-8. Flotation was checked based on the extreme FS from EM 110-2-2100. Strength was checked in a manner similar to that for existing conditions for simplicity and to provide comparable results. Rather than providing a typical LRFD check, a factor of safety for each gatewell was compared to an equivalent required minimum FS based on LRFD factors. The equivalent minimum FS of 2.6 is based on the following:

$FS \geq HF*LF/\phi = 1.3*1.7/0.85 = 2.6$ where

HF = hydraulic factor,
LF = single load factor,
ϕ = resistance factor (lower value for shear assumed).

The gatewells which meet the strength and stability requirements need only a simple raise. Otherwise, the modification is stated in the "Notes" column of the results table.

It is important to note that complete information (wall thicknesses and reinforcement size and spacing) was not available for all gatewells (see table for locations). Those gatewells were analyzed based on known information from drawings, field measured data, and assumptions. Assumptions were made conservatively. For example, wall thickness was assumed to be constant for the full depth (the top could be measured in the field) and the reinforcement was assumed to be the minimum found in gatewells. Verification is required unless the analysis with conservative assumptions showed that the gatwell meets criteria.

For further information regarding the analysis approach and examples see the general structural methodology chapter of this appendix.

N500+3' with Water to Top of Protection					
Station	**Proposed Raise**	**Uplift Factor of Safety (>1.1 Req'd)**	**Strength Factor of Safety (> 2.6 Req'd)**	**Controlling Structural Mechanism**	**Notes**
0+75 UE	**SL Gap**	1.4	2.0	Base Slab Flexure	Replace (new alignment)
7+50 UE	**RS levee**	1.4	4.1	Wall Shear	
12+79 UE	**FW**	1.3	1.5	Base Slab Flexure	Replace
15+33[b]	**levee**	1.5	0.6	Base Slab Flexure	Modification assumed. Newer than 62 mod (no prev. raise)
32+80	**levee**	1.2	2.6	Wall Shear	
64+71	**FW**	1.3	1.6	Wall Shear	Replace. Slurry cut-off wall
76+83		Refer to Osage Pump Station Analysis			
79+60[b]		To be abandoned			
79+80[b]		To be abandoned			
90+79	**levee**	1.5	4.0	Wall Shear	
91+76	**levee**	1.4	2.9	Wall Shear	
108+95[b]	**levee**	1.1	2.7	Wall Shear	Riase only. Adequate with conservative assumptions
129+20	**levee**	1.4	1.7	Wall Flexure	Modify for strength
156+75	**Twall**	1.4	1.7	Wall Flexure	Modify for strength
185+70[b]	**FW**	1.4	2.1	Wall Flexure	Modification assumed. FS > 2 w/ conservative assumptions. No previous raise and O&MM PL 222 shows thicker walls at base.
186+74	**FW**	1.5	2.7	Wall Shear	
194+60[b]		To be abandoned			
212+76	**FW**	1.5	3.1	Base Slab Flexure	
220+64	**FW**	1.4	2.8	Wall Shear	
230+77		Refer to Shawnee Pump Station Analysis			
240+73	**Twall**	1.4	1.7	Wall Flexure	Modify for strength
244+70	**Twall**	1.5	3.2	Wall Flexure	
246+53	**FW**	1.5	3.8	Wall Flexure	
250+31[a]	**FW**	1.3	4.8	Wall Flexure	
253+43[a]	**FW**	Abandoned: no action			
256+71	**FW**	Abandoned: grout pipes, fill gatewell			
260+00[a,b]	**FW**	1	0.9	Wall Flexure	Replacement assumed. Pre-1950 construction.
260+84[a]	**FW**	Abandoned: grout pipes, fill gatewell			
262+89[a]	**FW**	1	6.6	Wall Flexure	Add concrete collar at top for weight
266+76[a]	**FW**	1	9.0	Wall Flexure	Add concrete collar at top for weight
276+79	**FW**	Refer to KC Southern Railroad Pump Station Analysis			
281+50[c]	**FW**	See note c			
286+59[a]	**FW**	0.9	4.1	Wall Flexure	Abandon
290+52[a]	**FW**	1.1	3.2	Wall Flexure	
295+45[b]	**FW**				
295+52	**FW**	1.4	3.0	Wall Flexure	
299+20	**FW**	Refer to Central Ave Pump Station Analysis			
311+11	**levee**	1.4	1.7	Wall Flexure	Modify for strength
315+10[b]	**levee**	1.2	1.4	Wall Flexure	Modification assumed. No prev. raise. N500+3' Raise ~ 1.5ft
41+45[b]	**levee**	1.2	1.6	Wall Flexure	Replacement assumed

[a] top below level of protection
[b] Incomplete information (complete drawings were not found) - conservative assumptions used
[c] Integral with floodwall, founded on piles. No analysis performed, assumed adequate for raise but will need to be fully analyzed with floodwall modification

Table A-13-5: N500+3' Gatewells Results

A-13.4.6 RCBs and Pipes Associated with Gatewells

The results for the conduits associated with gatewells can be found in Table A-13-6 with additional information for the box culverts (factors of safety) given in Table A-13-7. In addition, the following paragraph discusses the approach to cast iron pipes and estimating the associated work for future conditions. For more information on analysis of RCBs and pipes refer to the structural methodology chapter and to the structural exhibits for examples.

Cast Iron Pipe, CIP: Two main concerns exist for the existing CIPs. First, they may see additional load with a raise in levee elevation (not in the case of some floodwalls as described below). Secondly, CIPs are susceptible to corrosion. For this study, assumptions were made based on available data, but during formulation of plans and specs these pipes will require a detailed inspection and may require wall thickness measurements.

Without wall thickness an analysis could not be performed to verify the ability of each pipe to withstand additional loading invoked by a levee raise. However, in locations where new floodwalls replaced existing levees, it was assumed that enough soil would be removed to offset the increase in water loading. In those cases, if a detailed inspection reveals an adequate condition, no additional work will be required.

In addition to strength issues, determining the pipe's condition is of utmost importance. CIPs are no longer used in levee projects because they are vulnerable to corrosion, and the CIPs under consideration were constructed during use of leadite joints which have had severe corrosion problems. Unless completely replaced, these pipes will require a detailed, high quality inspection.

Due to the lack of knowledge on pipe conditions and wall thicknesses, cost for this stud was a rough estimation. The estimation included:

- Inspection of all pipes.
- Measurement of thickness for all of the pipes that do not have "None" under the action column
- Replacement of 25% of the pipes that do not have "None" under the action column
- Slip liner of 25% of the pipes that do not have "None" listed under the action column.

N500+3' Results: Conduits Associated with Gatewells		
Station	**Conduit Size & Type**	**Action***
0+75 UE	36" DIP (pressure)	Replace section for new alignment
7+50 UE	24" RCP	None
12+79 UE	12'x8' RCB	None
15+33	8'x8' RCB	No Details found: Use new wall to remove enough soil to offset additional water load
32+80	42" RCP	None
64+71	42" RCP	None
76+83	Refer to Osage Pump Station Analysis	
79+60	84" RCP	Grout
79+80	60" RCP	Grout
90+79	30" DIP	None
91+76	30" CIP	See CIP Paragraph
108+95	42" RCP	None
129+20	Refer to 12th Street Pump Station Analysis	
156+75	Refer to Mill St Pump Station Analysis	
185+70	Refer to 5th St Pump Station Analysis	
186+74	30" DIP	None
194+60	18" & 12" CIPs	Grout and Abandon
212+76	24" CIP	None
220+64	24" CIP	None
230+77	Refer to Shawnee Pump Station Analysis	
240+73	48" RCP	None
244+70	24" CIP	See CIP Paragraph
246+53	30" CIP (pressure)	See CIP Paragraph
250+31	12" CIP	See CIP Paragraph
253+43	Abandoned and grouted	
256+71	Abandoned	Grout
260+00	30" CIP	See CIP Paragraph
260+84	Abandoned	Grout
262+89	12" CIP	See CIP Paragraph
266+76	16" CIP	See CIP Paragraph
276+79	Refer to KC Southern Railroad Pump Station Analysis	
281+50	42" RCP	None
286+59	24" CIP	Grout and Abandon
290+52	24" CIP	See CIP Paragraph
295+45	18" RCP	None
295+52	Refer to National Beef Pump Station Analysis	
299+20	Refer to Central Ave Pump Station Analysis	
311+11	7.5'x7.5' RCB	None
315+10	5'x4x RCB	No details: assumed adequate. **Must** be verified with testing
41+45	48" CIP (Pressure)	None (No prev. raises, N500+3 ~1 ft)

*Complete inspection required for all pipes

Table A-13-6: N500+3' Gatewell Conduits

Armourdale RCB Results: N500+3' Levee Elevations							
Station	Size	Bending			Shear		
		FS	Load Case	Member	FS	Load Case	Member
12+79	12x8	2.3	3	Wall	1.9	3	Floor
15+33	8x8	No information found					
311+11	7.5x7.5	2.7	3	Wall	2.4	2	Wall
315+10	5x4	No information found					

Load Case	C_V	C_H
1	1	0.4
2	1	0.57
3	1.5	0.5

Table A-13-7: N500+3' RCB Analysis Results

For cost purposes, it is assumed that all of the RCBs will receive liners under the levee since the two with drawings do not meet design criteria (FS>2.6 for HF=1.3, LF=1.7, ϕ=0.85)

A-13.4.7 Closure Structures Future Conditions

A summary of the closure structures required for the N500+3' event is given below in Table A-13-8. Table A-13-2

Station	Crossing	Type	Description
0+40 to 2+90	Upper End (Railroad)	Stop Log	New gap riverside with new gatewell, Pile foundation.
130+00	12th St. Bridge	Sand Bag	Minor work necessary
226+75	KC Terminal Bridge	Stop Log	New wall and gap landside of existing on abandoned RR, Pile foundation
275+42 & 276+26	Union Pacific RR & Missouri Pacific RR	Stop Log	New wall and gap landside of slot (fill slot), Pile Foundation
295+50	Central Ave	Sand Bag	
42+50 LE	Lower End Termination	Sand Bag	

Table A-13-8: N500+3' Closure Structures

The following notes regard the future condition consideration for closure structures:

- Locations with existing stop log gaps (Upper End Crossing and KC Terminal Bridge):
    - The UE crossing required extensive modification for the raise (foundation and stem modification) which can be seen by existing condition concerns.

Therefore, complete replacement was recommended which includes a new gatewell as an accessible riverside valve is required for the existing utility.
    - The complete details for most of the Kansas City Terminal Bridge stop log gap were found near the end of this study. The existing condition was updated based on the drawings but the raise was not re-evaluated. The assumption for cost purposes is a complete replacement, but modification of the gap should be evaluated in the design phase to save cost and impact to the railroad.
- New stop log gap at the Union Pacific and Missouri Pacific Railroad
    - The existing sandbag gaps are in between the bridge trusses and physical restraints prevent construction of a stop log gap in the current line of protection.
    - Existing foundations in the slot from the abutments for the bridge over the Kansas River and for the bridge over the slot prevent construction of the new stop log gap in the slot.
    - Due to the above reasons, the stop log gap was moved to the landward side of the slot with a new floodwall transitioning from the existing line of protection to the location of the new gap. A pile founded floodwall was anticipated to match the deep foundations of the existing walls. HTRW restrictions at PBI Gordon prevented use of levee as a transition to the new gap.

A-13.5 References:

1. Record Drawings; Volume I; Operations and Maintenance Manual; Armourdale Unit; Sheets dated Dec. 1951
2. Armourdale Unit, Kansas City, KS-1962 MOD. Plans for Construction of Flood Protection Works; May 1973
3. Armourdale Unit, Analysis of Design for Construction of Flood Wall, Levee and Appurtenances; July 1950
4. Plan and Profile of Proposed State Highway Federal Aid Project, Kansas City, KS, Wyandotte County; K-132, Kansas Avenue, 1982

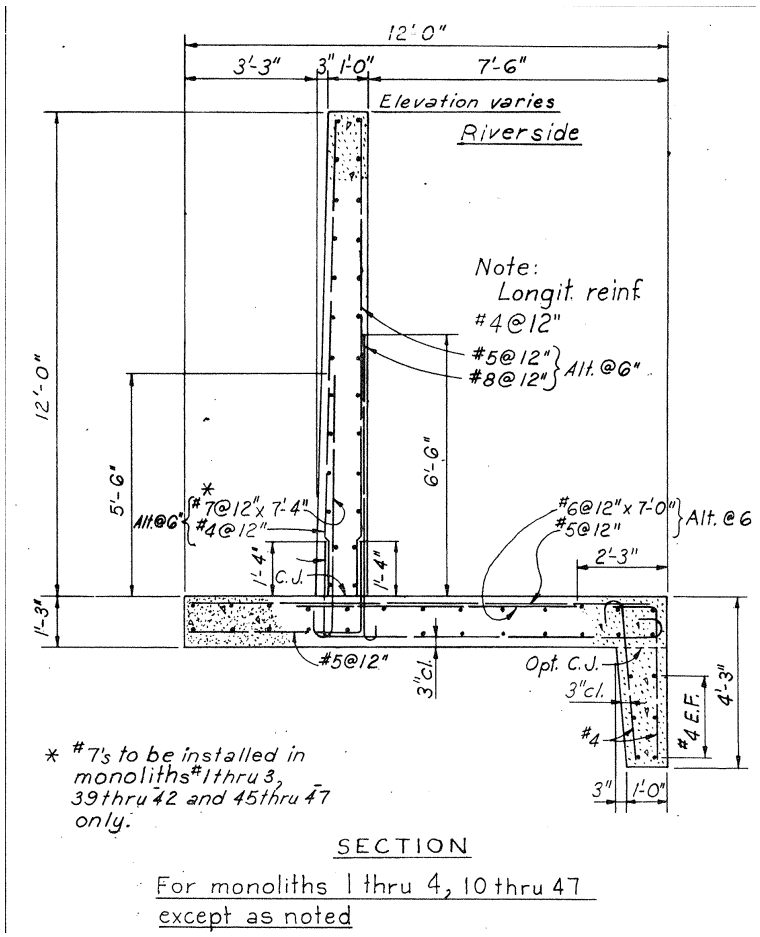

Armourdale Structural Exhibit 1: 60+30 to 77+78 Floodwall

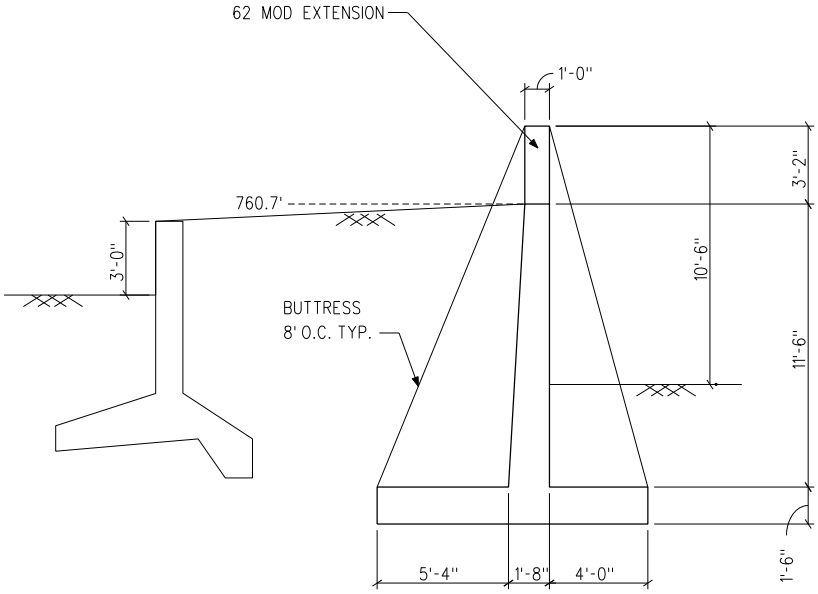

Armourdale Structural Exhibit 2: Floodwall Station 247+93 to 250+50 Riverside Right (Photo looking downstream)

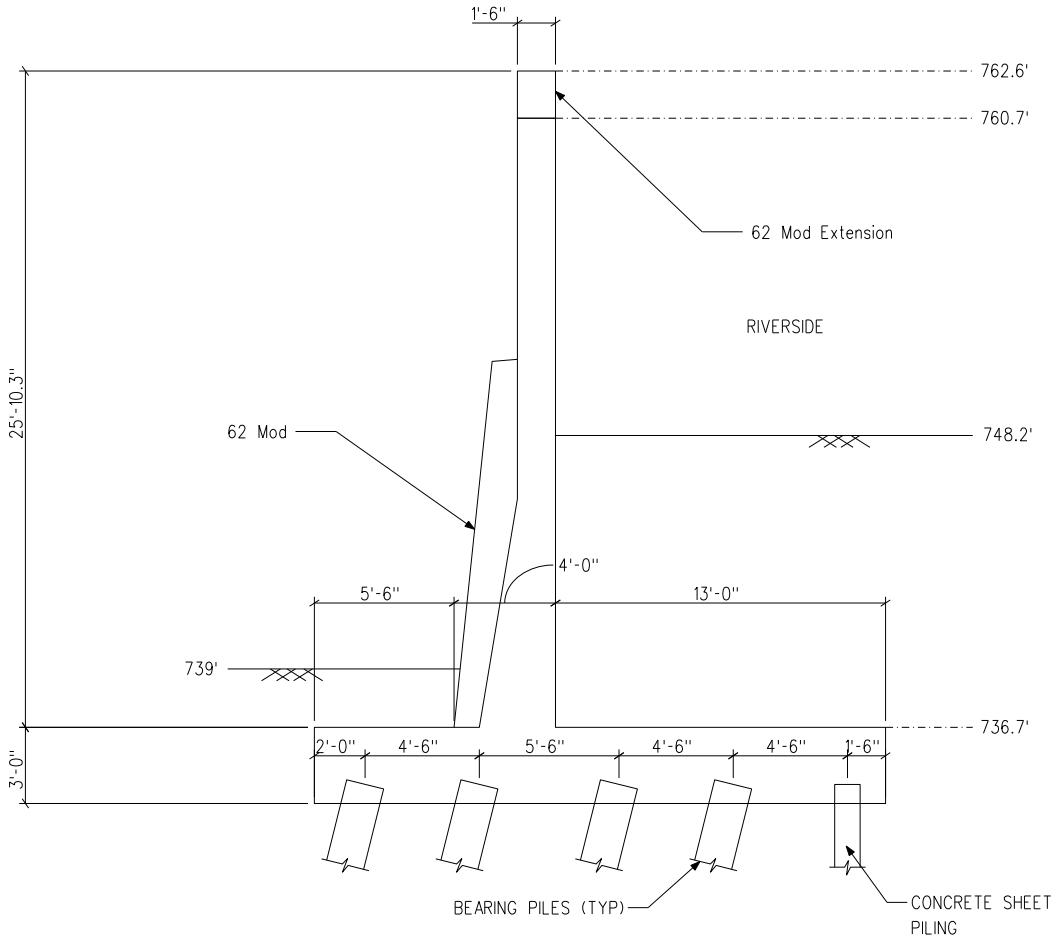

Armourdale Structural Exhibit 3: 274+00, Slot Riverside Right (Photo looking downstream)

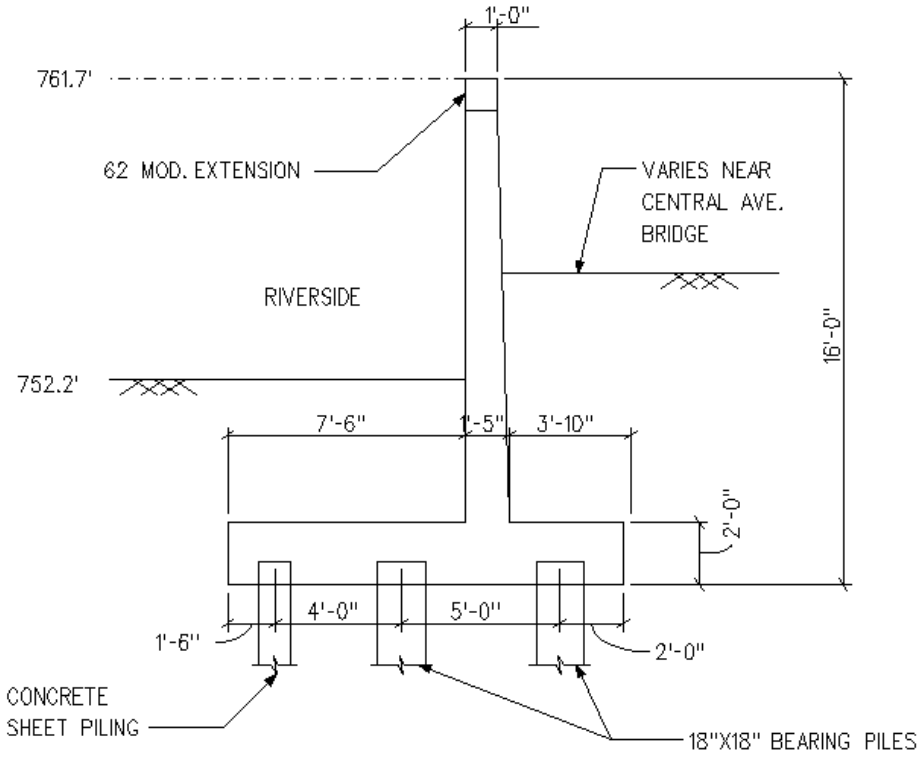

Armourdale Structural Exhibit 4: 294+00, Floodwall

(Photo from 295+00 looking upstream)

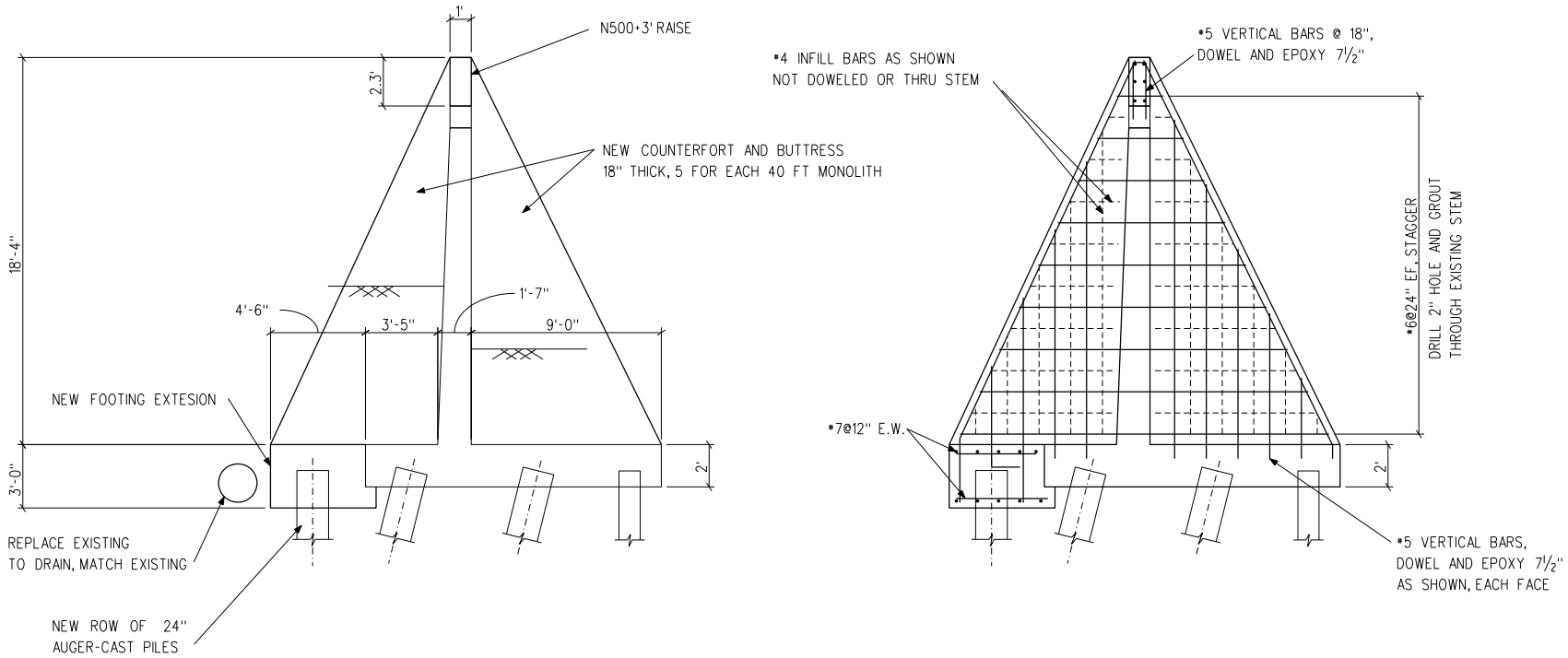

AVERAGE FLOODWALL MODIFICATION FOR
257+65 TO 261+50 AND 283+50 TO 302+58
(BASED EXISTING MON. 83 AND AVG RAISE)

Armourdale Structural Exhibit 5: Wall Modification WITH New Piles

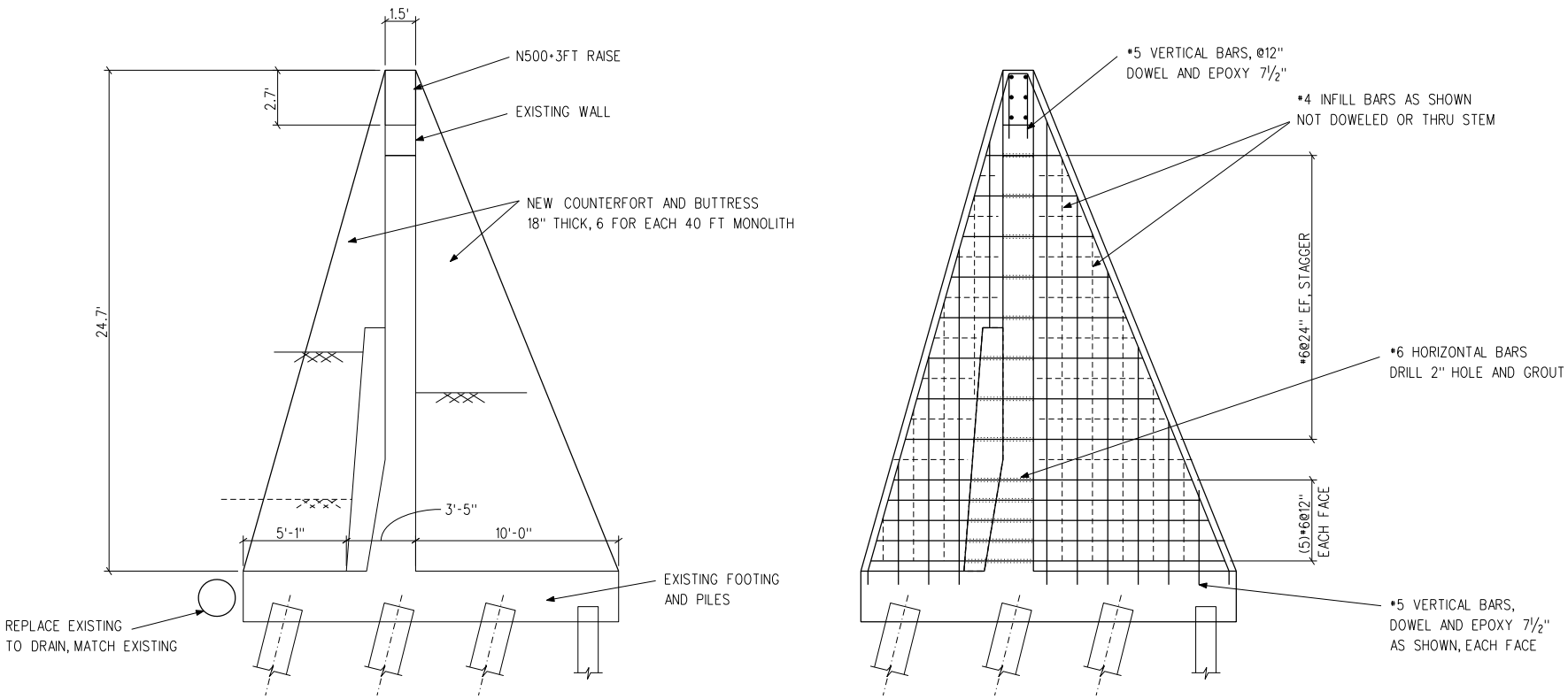

AVERAGE FLOODWALL MODIFICATION FOR
261+50 TO 274+36 AND 277+21 TO 283+50
(EXISTING MON. 62 & AVG RAISE)

Armourdale Structural Exhibit 6: Wall Modification WITHOUT New Piles

23 January 2008

Kansas City Levees – Armourdale: Evaluation of Existing Floodwalls for the n500+3 Design Condition

1. General:

A detailed geotechnical analysis was performed using the existing Armourdale floodwall and adding the n500+3 raise to the structure. Preceding this, loads on the existing pile foundations had been analyzed for the n500+3 loading condition and the foundations were found to be adequate with respect to axial loading and bending of the piles. However, a detailed analysis of the lateral deflection was requested. This was deemed critical since the wall had been raised once in the 1970's with no foundation modifications and the n500+3 design condition will raise the wall again (for a total raise of 3 to 6 feet along the length of the wall). Excessive movement of the wall would allow an uncontrolled release of water into the protected area, thus would constitute failure of the protection even without a catastrophic collapse.

A lateral deformation analysis for the n500+3 raise was performed at two locations; station 258+00 and station 277+00. The two sections analyzed represent two ends of the spectrum for the existing wall, station 258+00 is the smallest section and station 277+00 is the tallest section. Most of this wall was originally constructed to maintain the railroad "slot", however much of the slot has been filled in. This analysis assumed that any remaining slot would be filled in to the adjacent existing ground surface. The analysis was performed using the Ensoft software GROUP, which performs a 3 dimensional analysis of a pile group, and provides lateral deflections as well as lateral and axial loads on the piles.

2. Results:

Station 258+00. The lateral deflection was computed to be 0.6 inches for the undrained loading case and pinned pile head connection, and 2.4 inches for the drained loading condition. A limit of 1-inch of lateral deflection is the design target. Axial and lateral load capacities were not exceeded. These deflections are considered to be excessive, so a wall modification was investigated. An additional pile (same type as the existing) was added to the wall foundation on the land side at the same spacing as the existing piles. This reduced

computed wall deflections to 0.3 and 1.1 inches respectively. This is considered acceptable.

Station 277+00. The lateral deflection was computed to be 0.15 inches for the undrained loading case and pinned pile head connection and 0.30 inches for the drained loading case. Axial and lateral load capacities were not exceeded.

3. Recommendations:

a. The floodwall foundation at station 258+00 is inadequate for the n500+3 raise, and the foundation at station 277+00 is adequate. The wall foundation for the section at 258+00 can be modified for the n500+3 raise. The next step was determining the extent of wall that requires additional piles.

b. Comparing the net change in exposed wall stem (stem above the landside ground surface) for the n500+3 raise and accounting for filling all low landside slot areas to adjacent existing ground, the wall at station 258+00 showed a net stem increase of about 4.8 feet and the wall at station 277+00 showed a net stem decrease of 8.6 feet.

c. All walls with a net wall stem increase greater than 2.5 feet should be modified by adding an additional land side pile to the foundation. This would be reflected in the feasibility study construction cost estimate. The wall system could be evaluated in more detail during PED, hopefully to reduce the amount of wall that requires foundation modification.

Wall foundation modification locations:

Sta 257+65 to Sta 261+50
Sta 283+50 to Sta 302+60*

*The wall downstream of Central Avenue, station 295+50 to 302+58 is a wall on a single pile. It meets the net stem raise criteria as provided in the above paragraph, but should evaluated for lateral deflection during PED.

Armourdale Levee | Pile Capacity | GMB 06/08/07

CK RSK 6/11/07

EM - 1110-2-2906 Pile Foundation Design

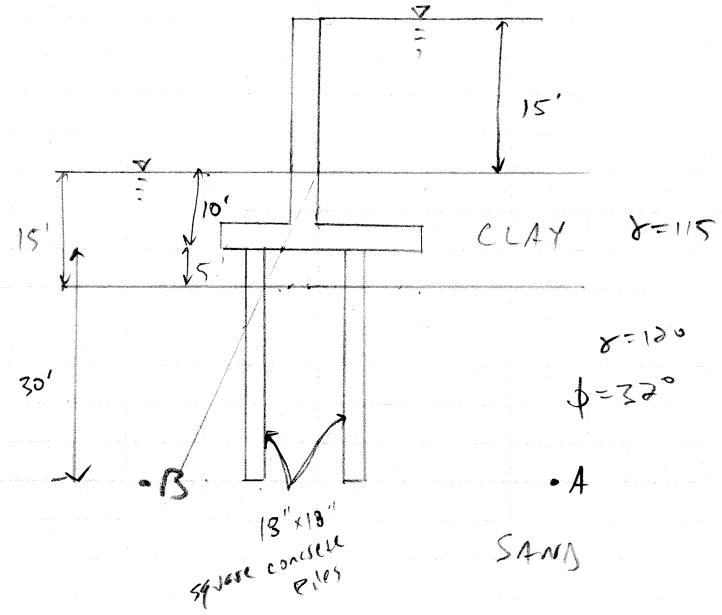

Calculate Ultimate Capacity for Extreme Event (MAX LOAD)

N500 +3 water Loading, Existing Piles.

Assume End Bearing only.

$q_t = \bar{\sigma}_v N_q$ ✓ $\bar{\sigma}_v$ calculated : $\bar{\sigma}_v$ = effective stress @ pile tip

N_q from Figure 4-4 in EM.

$N_q = 30$ ✓

$q_t = (2229\ psf)(30)$

$q_t = 66870\ psf$

P+A σ

$\sigma = (15)(62.4) + (15)(115) + (25)(120)$

$\sigma = 5661\ psf$

✓ $u = (15+15+25)(62.4)$ } SLIGHTLY CONSERVATIVE

$u = 3432\ psf$

$\bar{\sigma} = \sigma - u$

$= 5661 - 3432$

$\bar{\sigma}_v = 2229\ psf$

Ultimate Pile capacity =

$(66870\ psf)(1.5\ ft \times 1.5\ ft)$

$= 150{,}457\ lbs$ (87,000 lb)

$= 150\ Kips.$

From EM, Factor of safety recommended for extreme condition is 1.7 . . However, I recommend using minimum F.S. = 2.0 for extreme event.

- Ultimate Pile Capacity = 150 kips
- Allowable Pile Capacity = 75 kips

Original designers recommended 35 ton (70 kip) Allowable Pile Capacity.

Interesting!

22-141 50 SHEETS
22-142 100 SHEETS
22-144 200 SHEETS
AMPAD

where

c_a = adhesion between the clay and the pile

α = adhesion factor

c = undrained shear strength of the clay from a Q test

The values of α as a function of the undrained shear are given in Figure 4-5a.

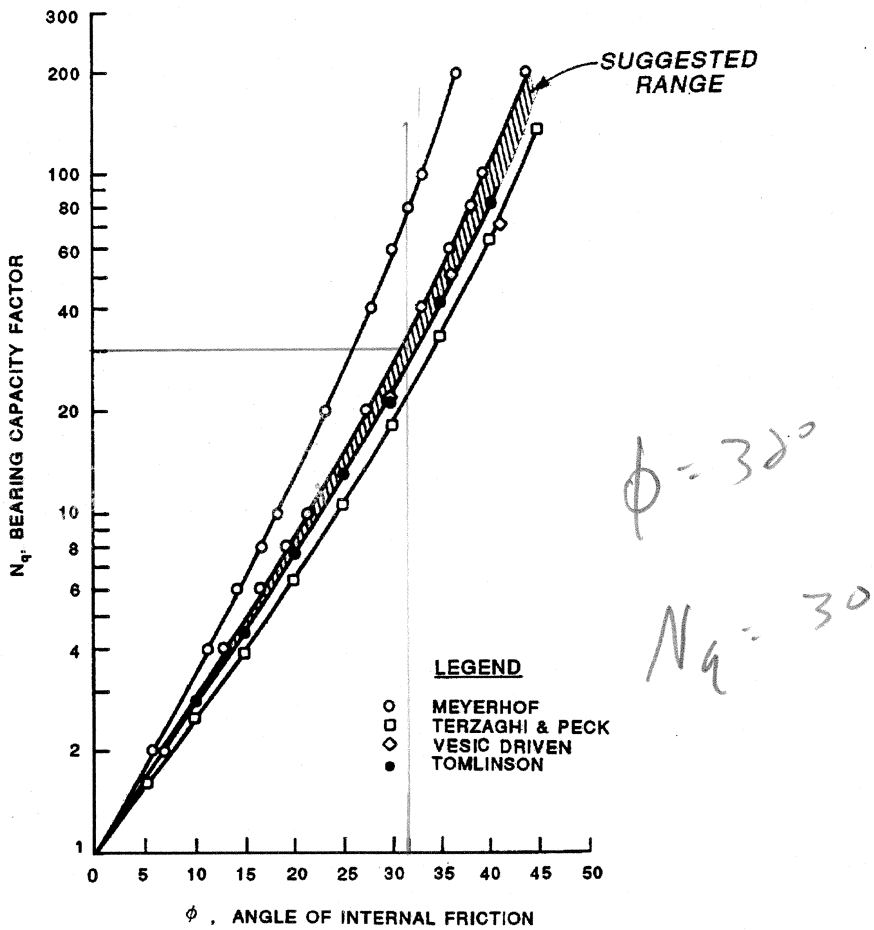

Figure 4-4. Bearing capacity factor

An alternate procedure developed by Semple and Rigden (Item 56) to obtain values of α which is especially applicable for very long piles is given in Figure 4-5b where:

$$\alpha = \alpha_1 \alpha_2$$

and

$$f_s = \alpha c$$

Soil-pile properties should, therefore, be determined for each type of loading to be considered.

c. Factor of Safety for Pile Capacity. The ultimate axial capacity, based on geotechnical considerations, should be divided by the following factors of safety to determine the design pile capacity for axial loading:

Method of Determining Capacity	Loading Condition	Minimum Factor of Safety Compression	Minimum Factor of Safety Tension
Theoretical or empirical prediction to be verified by pile load test	Usual	2.0	2.0
	Unusual	1.5	1.5
	Extreme	1.15	1.15
Theoretical or empirical prediction to be verified by pile driving analyzer as described in Paragraph 5-4a	Usual	2.5	3.0
	Unusual	1.9	2.25
	Extreme	1.4	1.7
Theoretical or empirical prediction not verified by load test	Usual	3.0	3.0
	Unusual	2.25	2.25
	Extreme	1.7	1.7

The minimum safety factors in the table above are based on experience using the methods of site investigation, testing and analysis presented herein and are the basis for standard practice. Deviations from these minimum values may be justified by extensive foundation investigations and testing which reduce uncertainties related to the variability of the foundation material and soil strength parameters to a minimum. Such extensive studies should be conducted in consultation with and approved by CECW-ED. These minimum safety factors also include uncertainties related to factors which affect pile capacity during installation and the need to provide a design capacity which exhibits very little nonlinear load-deformation behavior at normal service load levels.

d. Allowable Stresses in Structural Members. Allowable design stresses for service loads should be limited to the values described in the following paragraphs. For unusual loadings as described in paragraph 4-2b(2), the allowable stresses may be increased by one third.

(1) Steel Piles. Allowable tension and compression stresses are given for both the lower and upper regions of the pile. Since the lower region of the pile is subject to damage during driving, the basic allowable stress should reflect a high factor of safety. The distribution of allowable axial tension or compression stress along the length of the pile is shown in Figure 4-1. This factor of safety may be decreased if more is known about the actual driving conditions. Pile shoes should be used when driving in dense sand strata, gravel strata, cobble-boulder zones, and when driving piles to refusal on a hard layer of bedrock. Bending effects are usually minimal in the lower region of the pile. The upper region of the pile may be subject to the effects of bending and buckling as well as axial load. Since damage in the upper region is usually apparent during driving, a higher allowable stress is permitted. The upper region of the pile is actually designed as a